Nickolas H. Guertin and Michael S. Kalisz

Submarine Combat Control System Development With A Focus On Human Systems Integration

ABSTRACT

The development of human interaction with submarine combat systems is in a "renaissance." The Fleet operators, working with design agents and developers, are being given a controlling voice in how the system is designed including the functionality of displays and system manning concepts. Current Combat Control System developments are using Commercial off-the-Shelf (COTS) technology and an Open Systems software architecture as an enabler. This combination has provided the environment where improvements to the Navy's combat systems can be performed on an annual basis through a structured process called Advanced Processor Builds (APB's).

This paper presents a look at where combat system development has come from, a detailed look at the program today and a look forward with a strong focus on data driven decisions related to Human Systems Integration.

INTRODUCTION

Operations for submarines have continued to be a demanding challenge even though the end of the Cold War eliminated the Soviet Union as a threat to U.S. security. The proliferation of quiet diesel electric and nuclear submarines throughout the world has made the ability to detect and track these threats a necessity and a challenge. There are approximately 390 submarines now operating throughout the world (A.D. Baker III, Naval Institute) and, in the hands of an unfriendly nation, even a few of them could close a strategic waterway such as the Straits of Hormuz or the Taiwan Strait. (National Academies Press, 1997) Additionally, new air-independent propulsion technologies are being deployed in several submarine designs available for export, which greatly reduces the need for non-nuclear submarines to snorkel thereby limiting their main vulnerability to detection (Donaldson, 1996).

Where We've Come From…

In 1990, the submarine combat systems budget was over $4.5 billion. However, 1991 saw the collapse of the Soviet Union and the end of the Cold War, bringing with it a drop in the defense budget and a de-emphasis on anti-submarine warfare. This created a corresponding drop in the funds available for the development and fielding of combat system improvements to just $1 billion in the following year (Guertin & Miller, March 1998).

The magnitude of this funding decrease significantly hindered the ability of the Navy to provide continuing combat system improvements in the traditional manner. Under these fiscal constraints, this effort could only be accomplished if the legacy systems, which were difficult and expensive to upgrade, were replaced by a new open-systems and open architecture technologies that derive maximum development leverage from the commercial electronics environment. In the last few years three enabling factors have developed that make this replacement possible.

1) Driven by the demands of the commercial marketplace and fueled by the incredibly rapid pace of improvements in integrated circuit technology, computer processing power has increased exponentially (i.e. Moores' Law.)

2) The ability to develop submarine combat systems software using commercial technology and an open architecture environment to reduce both the time and cost of upgrading was demonstrated by two Navy Small Business Innovative Research (SBIR) proposals. These research efforts demonstrated that the same system performance could be developed at a fraction of the cost and that there was untapped ability to grow the performance of the system far beyond that possible in the MIL-SPEC environment.

3) The final enabler for the use of commercial technology in acquisition of combat systems was the specification reform efforts occurring in the Navy and the Department of Defense. In addition to lowering the unit cost of the hardware, the authority to use COTS expanded the universe of companies that could develop the hardware and software beyond the traditional defense contractors.

The result is the AN/BYG-1 Submarine Combat Control Program. With this program the Navy is able to answer the strong military need to rapidly infuse greater capability in the fleet by structuring the development program to take advantage of commercial technology and open systems.

Where We Are Today…

The AN/BYG-1 is being developed under the guidance of the Acquisition Reform Demonstration Program. This designation provides for accelerated development and test, concurrent development and procurement, annual Milestone Decision Agent production decisions, and incremental production.

To achieve the requirement to deliver maximum capability to the warfighter in the shortest time possible, three key tenets must be addressed:

1) All stakeholders must be closely involved throughout the development process (more on this later),

2) AN/BYG-1 will be installed on all classes of US Navy and Australian submarines and, hence, is the system within which all future improvements will be fielded.

3) AN/BYG-1 will have continuous improvements in capability designed in via a rolling development scheme that uses both Advanced Processor Builds (APB) and the Technology Insertion (TI) processes. This is achieved by making hardware and software changes more independent through the use of open systems architecture, including the use of middleware technology.

The ability to change the way data is manipulated by supporting algorithms and the way data are evaluated by the system operators is now more flexible due to advances in software technology. Object oriented programming languages, highly supported in the commercial marketplace, are providing our programmers and developers the tools needed to make significant changes in shorter periods of time.

To provide a focus for input and ensure that information to the developers comes directly from those in need of these enabling technologies, a three-tiered set of empowered fleet panels has been established. (Figure 1.)

The benefits realized from the involvement of these panels is twofold. First, the acquisition community receives critical design and development guidance that ensures operationally-relevant products. Second, the submarine navy, as represented by these panels, has a controlling voice in what is delivered to them. The Submarine Tactical Requirements Group (STRG) is a panel of senior officers, represented by the submarine fleet Type Commanders, the operational test and evaluation organization, and the acquisition community, that

provides the development community with requirements for overall capability.

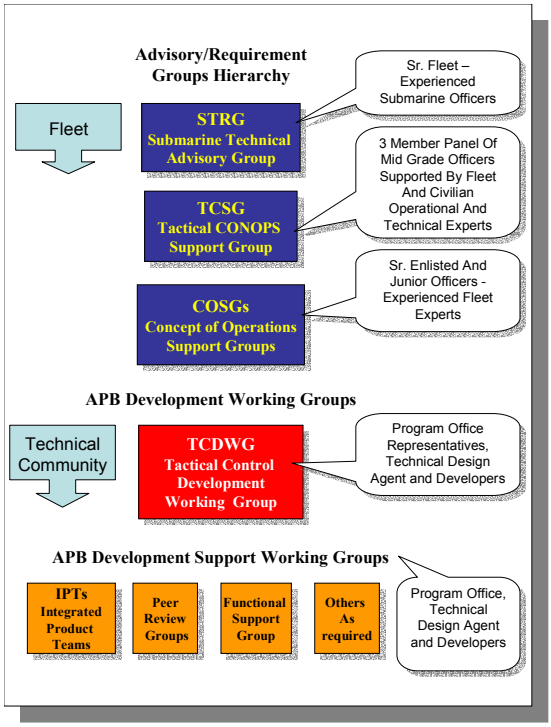

Figure 1. Fleet Hierarchy Within APB

The Tactical Control Supervisory Group (TCSG) is a panel of mid-grade officers that provides a single place for fleet approval of implementation that meets the STRG requirements. The Concept of Operations Support Group (Tactical) (COSG (T)) is a panel made up of senior enlisted and junior officers from various fleet commands and training activities that gives the direct input to the development community and reports to the TCSG. The COSG (T) is empowered to provide guidance on new system design elements being evaluated as a part of the APB process. The guidance they provide is not limited to displays and OMI, but to how the applications interact and are used to support the warfighter's mission. The COSG (T) also provides input for transitioning the APB products to the full production system implementation that becomes the software that is released for fleet use. This series of panels helps to eliminate the potential conflict in design guidance that the development community might be exposed to. This body provides a clear chain of empowered fleet operators available to help focus design efforts on those products that best meet the warfighter's needs.

The architecture of the Submarine Warfare Federated Tactical Systems (SWFTS) places the Combat Control System (CCS) at the focal point of all shipboard tactical sensor systems. It is within the CCS that the data from organic sensors, together with data provided from off-hull sources, are coalesced to define the ship's tactical picture. Additionally, recent requirements changes for information technology have necessitated a fresh look at the SWFTS system architecture. A new network topology (Figure 2.) was conceived to provide maximum flexibility while attending to the challenge of keeping disparately classified data from intermingling across security enclaves.

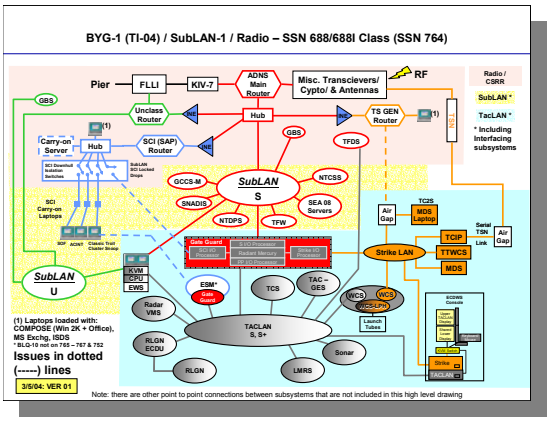

Figure 2. SWFTS Enclave Diagram

The process by which the development community generates new capability is by an annual, 4- step process called the Advanced Processor Build process (Dostie, July 2003). Figure 3 illustrates the cyclic nature of the APB Process.

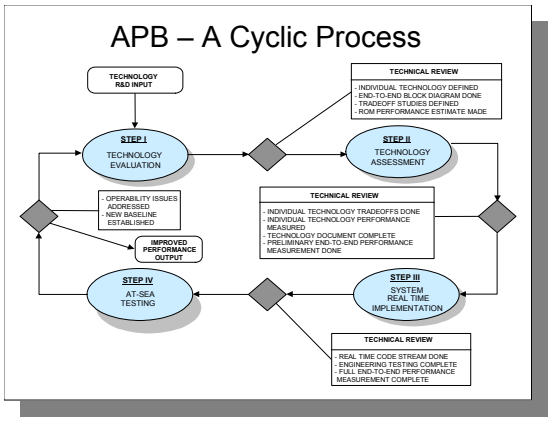

Figure 3. APB Process

Step 1, Technology Evaluation, explores new technology concepts in light of evolving requirements from the fleet, emerging technologies and past experience from the previous year's APB. These concepts come from a diverse set of product developers including the Defense Advanced Research Projects Agency, Office of Naval Research (ONR), industry, government research laboratories, and research universities. Step 2, Algorithm Assessment, is a test of the algorithms and capabilities by running the algorithms through a series of experiments with known inputs. Step 3, System Real-Time Implementation, takes software running the new capability in the context of a combat system with inputs that are known to the developer and new tactically relevant inputs that are known only to a set of independent testers.

Throughout the first three steps are peer reviews to evaluate the performance of the new algorithms and capabilities. Some capabilities do not meet the performance objectives and are evaluated for further refinement as a part of a build-test-build approach. Fleet input is provided throughout the 4-step process, but is especially important at the Step 3 and 4. Step 4, At-Sea Testing, is a controlled at-sea test where new capabilities are evaluated with operators integral to the process. Extensive sets of data are collected from these sea experiments so that future algorithms can be tested to evaluate how much improvement is being made from year to year. Once the step-4 sea test is completed and the data are analyzed, the milestone decision authority is briefed on the results for final approval for incorporation into the rest of the fleet systems as soon as possible. Figure 4 illustrates the transition from APB to Production System.

Hand-in-hand with the APB process is the Technology Insertion (TI) process. This bi-annual review of enabling technology (mostly computing hardware) provides for a continuously evolving baseline on which APB capabilities will ride. The TI process does not lend itself to fleet input, and will not be discussed in detail here. However, the TI process in included for completeness to introduce the path by which computing hardware is enhanced.

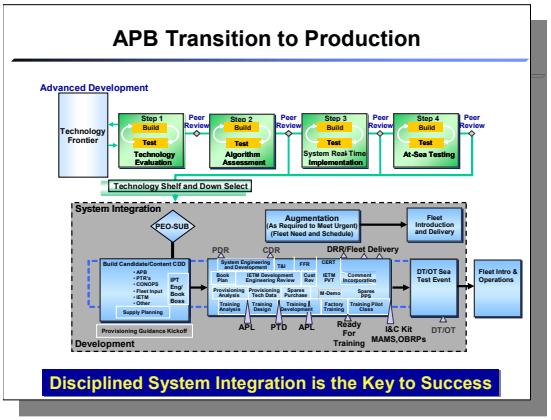

Figure 4. APB Transition to Production

The impact of the APB / TI process is that every boat that is equipped with AN/BYG-1 will receive improved capability from one deployment to the next. A typical boat will get two deployments out of any one TI, and will get a new APB for each deployment. This introduces a significant challenge in training operators to maximize the utility of new capabilities from one APB to the next. A series of training events are provided to the boats receiving these new capabilities. The Type Commanders themselves provide pre-deployment training to each boat that

receives new capability. In addition, submarine schools are being equipped with shore trainers that use the same tactical software running on equivalent commercial technology.

A Focus On The Operator

The challenge in any development effort is to meet the operational requirements within the scope and budgetary constraints set by the customer, i.e., the sponsoring Navy program office, while building a system that meets the needs and expectations of both the fleet commander and fleet operator. To date, Human Systems Integration (HSI) has not received appropriate attention. Developers and/or subject-matter experts have had the primary responsibility to design and build robust system. This can result in a system that requires all expert users. HSI, when executed properly, may hardly be noticed.

Think for a moment of the last time you sat in a theatre to watch a live performance; if the audio quality of the program were distorted, it distracted from your ability to enjoy the overall performance. If instead the audio quality were flawless, you most likely didn't pat the sound engineer on the back on your way out of the theatre. In a similar fashion "human factors, like a vacant seat in a class, is most noted when it is absent. When systems function properly, few congratulate the human factors specialist for a job well done. But when disaster strikes there is a sudden interest in using the knowledge of the human factors expert to apply a quick fix." (Kantowitz and Sorkin, 1983.)

Introducing human factors engineering early in the design and implementation phases of system development is critical to the overall success of the system and the ability of the shipboard operators to execute their task when it counts most. "Sailors clearly are the Navy's most valuable shipboard system, and our duty is to ensure that every ship we build and system we deliver is designed, acquired and supported with their performance, training, safety and survivability in mind." (Balisle, Sep 2002).

The new APB development paradigm provides for the rapid prototyping of display capabilities and the underlying algorithms and functions that support system operation. As part of this rapid prototyping effort, the fleet, through the COSG (T) involvement, has a direct hand in HSI. Bringing fleet operators and fleet trainers to the table early in the development process provides invaluable insight into system requirements and design and encourages them to interface directly with developers, many who have had limited experience with submarines or at-sea operation.

As mentioned earlier, the COSG (T) advises the system developers on desired functional capabilities and the displays that support them. The COSG (T) is chartered with developing the operating concepts for new functions, as well as the associated displays they will be operated from. The COSG (T) will aid the developers in understanding the functional requirements, review and assess displays, system design and implementation, support of system testing throughout the build-test-build cycle and support the development, as well as conduct training, of the new capabilities. This isn't to say that the fleet operator has the only say on HSI topics, rather, together with the various working groups, technical agents and developers involved with the process and products, come to agreement on the resulting implementation. HSI must truly be a collaborative effort.

Many new display capabilities are realized by modifying an existing system design; however, a recent success story came when both the fleet and developers weren't constrained by the existing design. Instead, they started with a "blank sheet of paper" and developed a highly functional man-machine interface, significantly simpler to

operate and understand than previous designs. The APB Process provides the flexibility to rethink decisions of the past, and rapidly propose and prototype alternatives.

Throughout the development process the COSG (T) participates in reviews and checkpoints. The development process includes several Peer Reviews where implementation is evaluated and the fleet is encouraged to give their assessment of overall usability of the system. A major part of their involvement is to assess HSI, providing insight and recommendations on display and interface implementation. Fleet operators continue to be involved throughout the test and certification process as well. Most system certifications also include an operational exercise (OPEX) where this test evolution is completely executed by fleet personnel who are charged with assessing the system for overall operability.

As the APB process continues, the Test Evaluation and Assessment Support Group (TEASG) provides an independent assessment of the implementation and the utility the new product provides to the fleet. Ultimately, the TEASG, through the conduct of steps 3 and 4, and associated analysis, makes an independent recommendation to move the new capabilities forward into the "production" system.

In parallel with the APB process, a new initiative, titled Combat Control Engineering Measurement Program (CCEMP), will assess the effectiveness of deployed combat control systems from a performance perspective. It is necessary and desirable to influence the longer term objective of CCEMP to assess not only overall system performance but to explicitly include operator employment. Data collection is necessary to help evaluate the HSI including overall system concept of operation, displays and operator actions. Using data collected from actual deployments, CCEMP will measure the effectiveness of the system in enabling successful mission execution. Feedback from this analysis will be provided to the system developers/integrators as well as the COSG (T). Analysis of these data will help lead to defining comprehensive system requirements for future development efforts, allowing the Navy to include operator effectiveness and HSI as part of overall system evaluation.

Our Road Ahead…

The next step is to mature the process of improving CCS operation by integrating HSI tools into the APB and core development processes. The first step is to characterize the system performance from an HSI perspective. Though the Navy performs many controlled tests, in-lab and at-sea experiments, war-games, and tactical operations, there is surprisingly little data on overall combat system operations that includes operator performance as a measured set of parameters. There also is a lack of measured and validated data for assessing operator performance available to the development community. What is needed is to establish a baseline set of performance metrics on how the submarine operators fight the ship. Once this baseline is established, the Navy can evaluate the improvement in performance with measured data from controlled human-factors experiments performed in the lab and at sea.

Classic Test and Evaluation efforts evaluate how well a product met its design goals for the system, without characterizing operator performance. We carefully measure dB gained, number of targets tracked, system longevity, and weapon placement and performance. However, we have not typically included the operator in those performance attributes to acquire measures of percent of time the target's state (location, course and speed) is characterized, time taken to correctly report it, or how far away from the systems ideal performance the operators are able to achieve. While the systems developed to date have been

operable due to fleet involvement with the developers, the shortfall is the lack of performance measures to support understanding the degree of improvement from one evolution to the next.

We must begin to make these measurements and commit to continue to evolve our knowledge of operator performance throughout the development lifecycle. This can be done through employing a layered set of tools, which can be incorporated into the lifecycle without placing an overwhelming burden on development costs. Some examples of these tools include: matching the method to the development stage, using structured concept of operations and scenarios, use the best prototypes available for the stage of development you are in, ensuring that quantitative metrics are being used, including operator preference.

Though preference is an important aspect of design it can be put into metrics by using rating scales' performing interviews and questionnaires. Meetings may be the least valuable ways off getting design input as they may be dominated by strong personalities which tend to limit valuable input from others For example the COSG (T) is staffed with mostly dominant leaders, such that personal dynamics carries a strong influence in their deliberations.

CONCLUSION

What is needed next is to characterize operator performance by making a significant investment in running human-factors experiments. Test cases and scenarios must be established, as well as metrics to support analyses related to operator performance. Robust simulations must be created, representative operators identified, experiments run, and analyses performed. We need to measure the performance of the new products, and see how well the system supports users and decision makers, and then report shortfalls for evaluation and iteration into future developments.

Limited efforts to support operator performance characterizations are underway. These include influencing the data collection plans for future APB step 4 tests, integrating HSI and experimental psychologists in the process, and combat system modeling efforts that explicitly include the operators.

REFERENCES

Associated Press, March 6, 2004 China Budget Boosts Military, Rural Areas

Baker A. D. III Feb 2004; United States Naval Institute. Proceedings Combat Fleets Vol. 130, Iss. 2; pg. 91, 1

Balisle, P. M. Adm., Sep 11, 2002, Memorandum Ser 10/236 Human Systems Integration Directorate (SEA 03)

Dostie, Ronald J., Director PEO IWS5A, July 11, 2003, Advanced Processor Build (APB) Process Operating Instruction, published by Advanced Systems Technology Office (ASTO)

Farrel, Richaard E. Dec. 2003 United States Naval Institute Proceedings. Annapolis Revitalize ASW Vol. 129, Iss. 12; pg. 40

Guertin & Miller, ASNE Journal, March 1998

Kantowitz and Sorkin, 1983, Human Factors: Understanding People-Systems Relationships, published by Wiley and Sons. ch. 1, pg. 4

The National Academies Press, 1997 Technology for the United States Navy and Marine Corps, 2000-2035 Becoming a 21st-Century Force: Volume 7: Undersea Warfare (1997) Commission on Physical Sciences, Mathematics, and Applications

Udicious Richard A, Feeley, Michael E
January 2004 United States Naval Institute. Proceedings Annapolis: Jan
2004. Vol. 130, Iss. 1; pg. 72

ACKNOWLEDGEMENTS

Our thanks to Ms. Ann H. Silva, Naval Undersea Warfare Center Division Newport, RI for technical review of this paper and insight into the APB process.

Nickolas H. Guertin P.E., received a MBA from Bryant College in 2002 and his bachelors from University of Washington in Mechanical Engineering in 1990 and is a registered Professional Engineer. Prior to attending college, he enlisted in the Navy and served on submarines for six years, he then joined the Navy Reserve, received a commission as an engineering officer in 1991 and retired in 2002. He has been with the Naval Undersea Warfare Center since 1990, and has worked as a heavyweight torpedo depot engineer, and submarine sonar systems engineer. He is now working on-site at Naval Sea Systems Command as the Chief Engineer for Submarine Tactical Control and Tacical Local Area Network (TacLAN).

Michael S. Kalisz, received his Bachelor of Science degree in Electrical Engineering from the University of Massachusetts, Dartmouth in 1985 and followed with extensive graduate studies in microprocessor based system. He has been with the Naval Undersea Warfare Center (NUWC) Newport, RI and its predecessor laboratories since 1980. He has been involved with Submarine Combat Control System support and development throughout his career at NUWC. He currently serves as the Technical Design Agent for the AN/BYG-1 Tactical Control System and Tactical Local Area Network (TacLAN).