COUPON S1A-17 TO S1A-20

Coupon S1A-17 to S1A-20: Decoding Data After Processing

Coupon S1A-17

Encoded Data	Deep Laser Engrave Mark 1	Mark 2	Mark 3	Mark 4	Dot Peen Mark 1	Mark 2	Mark 3	Mark 4	Micro Mill Mark 1	Mark 2	Mark 3	Mark 4	
	1767924793	1767924805	1767924834	1767924851	3284645196	3577148088	1437884521	412058609	3178940236	2937231265	8661523721	6937731644	
MXi Handheld	Deep Laser Engrave Mark 1	Mark 2	Mark 3	Mark 4	Dot Peen Mark 1	Mark 2	Mark 3	Mark 4	Micro Mill Mark 1	Mark 2	Mark 3	Mark 4	Time (s)
Operator 1 - Read 1	1767924793	1767924805	1767924834	1767924851	3284645196	3577148088	X	412058609	X	2937231265	8661523721	6937731644	210
Operator 1 - Read 2	1767924793	1767924805	1767924834	1767924851	3284645196	3577148088	X	412058609	X	2937231265	8661523721	6937731644	
Operator 1 - Read 3	1767924793	1767924805	1767924834	1767924851	3284645196	3577148088	X	412058609	X	2937231265	8661523721	6937731644	
Operator 1 - Read 4	1767924793	1767924805	1767924834	1767924851	3284645196	3577148088	X	412058609	X	2937231265	8661523721	6937731644	
Operator 1 - Read 5	1767924793	1767924805	1767924834	1767924851	3284645196	3577148088	X	412058609	X	2937231265	8661523721	6937731644	
Operator 1 - Read 6	1767924793	1767924805	1767924834	1767924851	3284645196	3577148088	X	412058609	X	2937231265	8661523721	6937731644	
MS-Q Handheld	Deep Laser Engrave Mark 1	Mark 2	Mark 3	Mark 4	Dot Peen Mark 1	Mark 2	Mark 3	Mark 4	Micro Mill Mark 1	Mark 2	Mark 3	Mark 4	Time (s)
Operator 1 - Read 1	1767924793	1767924805	1767924834	1767924851	X	X	X	412058609	X	2937231265	8661523721	6937731644	240
Operator 1 - Read 2	1767924793	1767924805	1767924834	1767924851	X	X	X	412058609	X	2937231265	8661523721	6937731644	
Operator 1 - Read 3	1767924793	1767924805	1767924834	1767924851	X	X	X	412058609	X	2937231265	8661523721	6937731644	
Operator 1 - Read 4	1767924793	1767924805	1767924834	1767924851	X	3577148088	X	412058609	X	2937231265	8661523721	6937731644	
Operator 1 - Read 5	1767924793	1767924805	1767924834	1767924851	X	3577148088	X	412058609	X	2937231265	8661523721	6937731644	
Operator 1 - Read 6	1767924793	1767924805	1767924834	1767924851	3284645196	3577148088	X	412058609	X	2937231265	8661523721	6937731644	

Coupon S1A-18

Encoded Data	Deep Laser Engrave Mark 1	Mark 2	Mark 3	Mark 4	Dot Peen Mark 1	Mark 2	Mark 3	Mark 4	Micro Mill Mark 1	Mark 2	Mark 3	Mark 4	
	1112312379	1112312382	1112312411	1112312428	3121360435	1385908572	4346733799	2734164898	321447293	7472580000	4238403351	7320244897	
MXi Handheld	Deep Laser Engrave Mark 1	Mark 2	Mark 3	Mark 4	Dot Peen Mark 1	Mark 2	Mark 3	Mark 4	Micro Mill Mark 1	Mark 2	Mark 3	Mark 4	Time (s)
Operator 1 - Read 1	1112312379	1112312382	1112312411	1112312428	3121360435	1385908572	4346733799	2734164898	X	7472580000	4238403351	7320244897	180
Operator 1 - Read 2	1112312379	1112312382	1112312411	1112312428	3121360435	1385908572	4346733799	2734164898	X	7472580000	4238403351	7320244897	
Operator 1 - Read 3	1112312379	1112312382	1112312411	1112312428	3121360435	1385908572	4346733799	2734164898	X	7472580000	4238403351	7320244897	
Operator 1 - Read 4	1112312379	1112312382	1112312411	1112312428	3121360435	1385908572	4346733799	2734164898	X	7472580000	4238403351	7320244897	
Operator 1 - Read 5	1112312379	1112312382	1112312411	1112312428	3121360435	1385908572	4346733799	2734164898	X	7472580000	4238403351	7320244897	
Operator 1 - Read 6	1112312379	1112312382	1112312411	1112312428	3121360435	1385908572	4346733799	2734164898	X	7472580000	4238403351	7320244897	
MS-Q Handheld	Deep Laser Engrave Mark 1	Mark 2	Mark 3	Mark 4	Dot Peen Mark 1	Mark 2	Mark 3	Mark 4	Micro Mill Mark 1	Mark 2	Mark 3	Mark 4	Time (s)
Operator 1 - Read 1	X	1112312382	1112312411	1112312428	X	1385908572	4346733799	2734164898	X	7472580000	4238403351	7320244897	210
Operator 1 - Read 2	X	1112312382	1112312411	1112312428	X	1385908572	4346733799	2734164898	X	7472580000	4238403351	7320244897	
Operator 1 - Read 3	X	1112312382	1112312411	1112312428	X	1385908572	4346733799	2734164898	X	7472580000	4238403351	7320244897	
Operator 1 - Read 4	X	1112312382	1112312411	1112312428	X	1385908572	4346733799	2734164898	X	7472580000	4238403351	7320244897	
Operator 1 - Read 5	X	1112312382	1112312411	1112312428	X	1385908572	4346733799	2734164898	X	7472580000	4238403351	7320244897	
Operator 1 - Read 6	1112312379	1112312382	1112312411	1112312428	3121360435	1385908572	4346733799	2734164898	X	7472580000	4238403351	7320244897	

Coupon S1A-19

Encoded Data	Deep Laser Engrave Mark 1	Mark 2	Mark 3	Mark 4	Dot Peen Mark 1	Mark 2	Mark 3	Mark 4	Micro Mill Mark 1	Mark 2	Mark 3	Mark 4	
	1767924712	1767924724	1767924753	1767924770	2344801832	3803098618	1171132250	6994100179	3604629434	7083951874	4056101281	9047138054	
MXi Handheld	Deep Laser Engrave Mark 1	Mark 2	Mark 3	Mark 4	Dot Peen Mark 1	Mark 2	Mark 3	Mark 4	Micro Mill Mark 1	Mark 2	Mark 3	Mark 4	Time (s)
Operator 1 - Read 1	X	X	X	X	X	X	X	X	X	X	X	X	240
Operator 1 - Read 2	X	X	X	X	X	X	X	X	X	X	X	X	
Operator 1 - Read 3	X	X	X	X	X	X	X	X	X	X	X	X	
Operator 1 - Read 4	X	X	X	X	X	X	X	X	X	X	X	X	
Operator 1 - Read 5	X	X	X	X	X	X	X	X	X	X	X	X	
Operator 1 - Read 6	X	X	X	X	X	X	X	X	X	X	X	X	
MS-Q Handheld	Deep Laser Engrave Mark 1	Mark 2	Mark 3	Mark 4	Dot Peen Mark 1	Mark 2	Mark 3	Mark 4	Micro Mill Mark 1	Mark 2	Mark 3	Mark 4	Time (s)
Operator 1 - Read 1	X	X	X	X	X	X	X	X	X	X	X	X	240
Operator 1 - Read 2	X	X	X	X	X	X	X	X	X	X	X	X	
Operator 1 - Read 3	X	X	X	X	X	X	X	X	X	X	X	X	
Operator 1 - Read 4	X	X	X	X	X	X	X	X	X	X	X	X	
Operator 1 - Read 5	X	X	X	X	X	X	X	X	X	X	X	X	
Operator 1 - Read 6	X	X	X	X	X	X	X	X	X	X	X	X	

Coupon S1A-20

Encoded Data	Deep Laser Engrave Mark 1	Mark 2	Mark 3	Mark 4	Dot Peen Mark 1	Mark 2	Mark 3	Mark 4	Micro Mill Mark 1	Mark 2	Mark 3	Mark 4	
	1298412311	1298412314	1298412343	1298412360	3109726188	444048107	9684179898	613743092	449567964	4665343274	3518231552	7575746356	
MXi Handheld	Deep Laser Engrave Mark 1	Mark 2	Mark 3	Mark 4	Dot Peen Mark 1	Mark 2	Mark 3	Mark 4	Micro Mill Mark 1	Mark 2	Mark 3	Mark 4	Time (s)
Operator 1 - Read 1	X	X	X	X	X	X	X	X	X	X	X	X	240
Operator 1 - Read 2	X	X	X	X	X	X	X	X	X	X	X	X	
Operator 1 - Read 3	X	X	X	X	X	X	X	X	X	X	X	X	
Operator 1 - Read 4	X	X	X	X	X	X	X	X	X	X	X	X	
Operator 1 - Read 5	X	X	X	X	X	X	X	X	X	X	X	X	
Operator 1 - Read 6	X	X	X	X	X	X	X	X	X	X	X	X	
MS-Q Handheld	Deep Laser Engrave Mark 1	Mark 2	Mark 3	Mark 4	Dot Peen Mark 1	Mark 2	Mark 3	Mark 4	Micro Mill Mark 1	Mark 2	Mark 3	Mark 4	Time (s)
Operator 1 - Read 1	X	X	X	X	X	X	X	X	X	X	X	X	225
Operator 1 - Read 2	X	X	X	X	X	X	X	X	X	X	X	X	
Operator 1 - Read 3	X	X	X	X	X	X	X	X	X	X	X	X	
Operator 1 - Read 4	X	X	X	X	X	X	X	X	X	X	X	X	
Operator 1 - Read 5	X	X	X	X	X	X	X	X	X	X	X	X	
Operator 1 - Read 6	X	X	X	X	X	X	X	X	X	X	X	X	

Coupon S1A-17 to S1A-20: Summary of Decoding Data After Processing

MXi Handheld	Deep Laser Engrave Mark 1	Mark 2	Mark 3	Mark 4	Dot Peen Mark 1	Mark 2	Mark 3	Mark 4	Micro Mill Mark 1	Mark 2	Mark 3	Mark 4	Average Time (s)
S1A-17	Yes	Yes	Yes	Yes	Yes	Yes	No	Yes	No	Yes	Yes	Yes	2.9
S1A-18	Yes	Yes	Yes	Yes	Yes	Yes	Yes	Yes	No	Yes	Yes	Yes	2.5
S1A-19	No	No	No	No	No	No	No	No	No	No	No	No	3.3
S1A-20	No	No	No	No	No	No	No	No	No	No	No	No	3.3
MS-Q Handheld	Deep Laser Engrave Mark 1	Mark 2	Mark 3	Mark 4	Dot Peen Mark 1	Mark 2	Mark 3	Mark 4	Micro Mill Mark 1	Mark 2	Mark 3	Mark 4	Average Time (s)
S1A-17	Yes	Yes	Yes	Yes	Yes	Yes	No	Yes	No	Yes	Yes	Yes	3.3
S1A-18	Yes	Yes	Yes	Yes	Yes	Yes	Yes	Yes	No	Yes	Yes	Yes	2.9
S1A-19	No	No	No	No	No	No	No	No	No	No	No	No	3.3
S1A-20	No	No	No	No	No	No	No	No	No	No	No	No	3.1

Coupon S1A-17 to S1A-20: Depth Data After Processing

Coupon S1A-17												
Depth Gage	Deep Laser Engrave				Dot Peen				Micro Mill			
	Mark 1	Mark 2	Mark 3	Mark 4	Mark 1	Mark 2	Mark 3	Mark 4	Mark 1	Mark 2	Mark 3	Mark 4
Measurement 1	0.0015	0.0045	0.0080	0.0120	0.0000	0.0015	0.0035	0.0055	0.0010	0.0020	0.0050	0.0100
Measurement 2	0.0020	0.0040	0.0085	0.0120	0.0005	0.0020	0.0045	0.0055	0.0005	0.0025	0.0065	0.0100
Measurement 3	0.0025	0.0045	0.0080	0.0115	0.0005	0.0020	0.0045	0.0060	0.0015	0.0020	0.0060	0.0110

Coupon S1A-18												
Depth Gage	Deep Laser Engrave				Dot Peen				Micro Mill			
	Mark 1	Mark 2	Mark 3	Mark 4	Mark 1	Mark 2	Mark 3	Mark 4	Mark 1	Mark 2	Mark 3	Mark 4
Measurement 1	0.0015	0.0040	0.0075	0.0120	0.0005	0.0020	0.0030	0.0060	0.0005	0.0035	0.0060	0.0115
Measurement 2	0.0020	0.0040	0.0080	0.0120	0.0000	0.0020	0.0035	0.0060	0.0005	0.0030	0.0065	0.0120
Measurement 3	0.0020	0.0045	0.0080	0.0115	0.0005	0.0015	0.0030	0.0060	0.0000	0.0030	0.0070	0.0120

Coupon S1A-19												
Depth Gage	Deep Laser Engrave				Dot Peen				Micro Mill			
	Mark 1	Mark 2	Mark 3	Mark 4	Mark 1	Mark 2	Mark 3	Mark 4	Mark 1	Mark 2	Mark 3	Mark 4
Measurement 1	0.0025	0.0030	0.0090	0.0120	0.0000	0.0015	0.0040	0.0060	0.0005	0.0020	0.0065	0.0100
Measurement 2	0.0025	0.0030	0.0095	0.0125	0.0005	0.0015	0.0035	0.0055	0.0001	0.0025	0.0070	0.0105
Measurement 3	0.0020	0.0035	0.0090	0.0130	0.0005	0.0010	0.0035	0.0050	0.0005	0.0020	0.0065	0.0100

Coupon S1A-20												
Depth Gage	Deep Laser Engrave				Dot Peen				Micro Mill			
	Mark 1	Mark 2	Mark 3	Mark 4	Mark 1	Mark 2	Mark 3	Mark 4	Mark 1	Mark 2	Mark 3	Mark 4
Measurement 1	0.0005	0.0020	0.0070	0.0090	0.0000	0.0000	0.0010	0.0010	0.0000	0.0015	0.0030	0.0060
Measurement 2	0.0005	0.0020	0.0050	0.0110	0.0000	0.0005	0.0015	0.0010	0.0005	0.0015	0.0050	0.0080
Measurement 3	0.0010	0.0015	0.0050	0.0100	0.0000	0.0000	0.0010	0.0015	0.0000	0.0020	0.0030	0.0060

Coupon S1A-17 to S1A-20: Summary of Depth Data After Processing

Coupon	Deep Laser Engrave				Dot Peen				Micro Mill			
	Mark 1	Mark 2	Mark 3	Mark 4	Mark 1	Mark 2	Mark 3	Mark 4	Mark 1	Mark 2	Mark 3	Mark 4
S1A-17	0.002	0.004	0.008	0.012	0.000	0.002	0.004	0.006	0.001	0.002	0.006	0.010
S1A-18	0.002	0.004	0.008	0.012	0.000	0.002	0.003	0.006	0.000	0.003	0.007	0.012
S1A-19	0.002	0.003	0.009	0.013	0.000	0.001	0.004	0.006	0.000	0.002	0.007	0.010
S1A-20	0.001	0.002	0.006	0.010	0.000	0.000	0.001	0.001	0.000	0.002	0.004	0.007
Average	0.002	0.003	0.008	0.012	0.000	0.001	0.003	0.005	0.000	0.002	0.006	0.010

COUPON A1A-17 TO A1A-20

Coupon A1A-17 to A1A-20: Decoding Data After Processing

Coupon A1A-17

Encoded Data	Deep Laser Engrave				Dot Peen				Micro Mill				
	Mark 1	Mark 2	Mark 3	Mark 4	Mark 1	Mark 2	Mark 3	Mark 4	Mark 1	Mark 2	Mark 3	Mark 4	
	1357924680	1357924707	1357924734	1357924761	3876939696	9638709263	4608240041	306010914	9524974623	1276607580	4638258921	9610227327	
MXi Handheld	Deep Laser Engrave				Dot Peen				Micro Mill				Time (s)
	Mark 1	Mark 2	Mark 3	Mark 4	Mark 1	Mark 2	Mark 3	Mark 4	Mark 1	Mark 2	Mark 3	Mark 4	
Operator 1 - Read 1	1357924680	1357924707	1357924734	1357924761	3876939696	9638709263	4608240041	306010914	9524974623	1276607580	4638258921	9610227327	270
Operator 1 - Read 2	1357924680	1357924707	1357924734	1357924761	3876939696	9638709263	4608240041	306010914	9524974623	1276607580	4638258921	9610227327	
Operator 1 - Read 3	1357924680	1357924707	1357924734	1357924761	3876939696	9638709263	4608240041	306010914	9524974623	1276607580	4638258921	9610227327	
Operator 1 - Read 4	1357924680	1357924707	1357924734	1357924761	3876939696	9638709263	4608240041	306010914	9524974623	1276607580	4638258921	9610227327	
Operator 1 - Read 5	1357924680	1357924707	1357924734	1357924761	3876939696	9638709263	4608240041	306010914	9524974623	1276607580	4638258921	9610227327	
Operator 1 - Read 6	1357924680	1357924707	1357924734	1357924761	3876939696	9638709263	4608240041	306010914	9524974623	1276607580	4638258921	9610227327	
MS-Q Handheld	Deep Laser Engrave				Dot Peen				Micro Mill				Time (s)
	Mark 1	Mark 2	Mark 3	Mark 4	Mark 1	Mark 2	Mark 3	Mark 4	Mark 1	Mark 2	Mark 3	Mark 4	
Operator 1 - Read 1	1357924680	1357924707	1357924734	1357924761	3876939696	9638709263	4608240041	306010914	9524974623	1276607580	4638258921	9610227327	240
Operator 1 - Read 2	1357924680	1357924707	1357924734	1357924761	3876939696	9638709263	4608240041	306010914	9524974623	1276607580	4638258921	9610227327	
Operator 1 - Read 3	1357924680	1357924707	1357924734	1357924761	3876939696	9638709263	4608240041	306010914	9524974623	1276607580	4638258921	9610227327	
Operator 1 - Read 4	1357924680	1357924707	1357924734	1357924761	3876939696	9638709263	4608240041	306010914	9524974623	1276607580	4638258921	9610227327	
Operator 1 - Read 5	1357924680	1357924707	1357924734	1357924761	3876939696	9638709263	4608240041	306010914	9524974623	1276607580	4638258921	9610227327	
Operator 1 - Read 6	1357924680	1357924707	1357924734	1357924761	3876939696	9638709263	4608240041	306010914	9524974623	1276607580	4638258921	9610227327	

Coupon A1A-18

Encoded Data	Deep Laser Engrave				Dot Peen				Micro Mill				
	Mark 1	Mark 2	Mark 3	Mark 4	Mark 1	Mark 2	Mark 3	Mark 4	Mark 1	Mark 2	Mark 3	Mark 4	
	1357924683	1357924710	1357924737	1357924764	2916015960	7540047118	8545507258	374343981	1787249936	8260488435	2242652223	6779980031	
MXi Handheld	Deep Laser Engrave				Dot Peen				Micro Mill				Time (s)
	Mark 1	Mark 2	Mark 3	Mark 4	Mark 1	Mark 2	Mark 3	Mark 4	Mark 1	Mark 2	Mark 3	Mark 4	
Operator 1 - Read 1	X	X	X	X	X	X	X	X	X	X	X	X	240
Operator 1 - Read 2	X	X	X	X	X	X	X	X	X	X	X	X	
Operator 1 - Read 3	X	X	X	X	X	X	X	X	X	X	X	X	
Operator 1 - Read 4	X	X	X	X	X	X	X	X	X	X	X	X	
Operator 1 - Read 5	X	X	X	X	X	X	X	X	X	X	X	X	
Operator 1 - Read 6	X	X	X	X	X	X	X	X	X	X	X	X	
MS-Q Handheld	Deep Laser Engrave				Dot Peen				Micro Mill				Time (s)
	Mark 1	Mark 2	Mark 3	Mark 4	Mark 1	Mark 2	Mark 3	Mark 4	Mark 1	Mark 2	Mark 3	Mark 4	
Operator 1 - Read 1	X	X	X	X	X	X	X	X	X	X	X	X	225
Operator 1 - Read 2	X	X	X	X	X	X	X	X	X	X	X	X	
Operator 1 - Read 3	X	X	X	X	X	X	X	X	X	X	X	X	
Operator 1 - Read 4	X	X	X	X	X	X	X	X	X	X	X	X	
Operator 1 - Read 5	X	X	X	X	X	X	X	X	X	X	X	X	
Operator 1 - Read 6	X	X	X	X	X	X	X	X	X	X	X	X	

Coupon A1A-19

Encoded Data	Deep Laser Engrave				Dot Peen				Micro Mill				
	Mark 1	Mark 2	Mark 3	Mark 4	Mark 1	Mark 2	Mark 3	Mark 4	Mark 1	Mark 2	Mark 3	Mark 4	
	1357924685	1357924712	1357924739	1357924766	8214872322	6249475777	4028524204	7481103274	1983908122	2526692356	6486358313	4518394282	
MXi Handheld	Deep Laser Engrave				Dot Peen				Micro Mill				Time (s)
	Mark 1	Mark 2	Mark 3	Mark 4	Mark 1	Mark 2	Mark 3	Mark 4	Mark 1	Mark 2	Mark 3	Mark 4	
Operator 1 - Read 1	1357924685	1357924712	1357924739	1357924766	X	6249475777	4028524204	7481103274	1983908122	2526692356	6486358313	4518394282	255
Operator 1 - Read 2	1357924685	1357924712	1357924739	1357924766	X	6249475777	4028524204	7481103274	1983908122	2526692356	6486358313	4518394282	
Operator 1 - Read 3	1357924685	1357924712	1357924739	1357924766	X	6249475777	4028524204	7481103274	1983908122	2526692356	6486358313	4518394282	
Operator 1 - Read 4	1357924685	1357924712	1357924739	1357924766	X	6249475777	4028524204	7481103274	1983908122	2526692356	6486358313	4518394282	
Operator 1 - Read 5	1357924685	1357924712	1357924739	1357924766	X	6249475777	4028524204	7481103274	1983908122	2526692356	6486358313	4518394282	
Operator 1 - Read 6	1357924685	1357924712	1357924739	1357924766	X	6249475777	4028524204	7481103274	1983908122	2526692356	6486358313	4518394282	
MS-Q Handheld	Deep Laser Engrave				Dot Peen				Micro Mill				Time (s)
	Mark 1	Mark 2	Mark 3	Mark 4	Mark 1	Mark 2	Mark 3	Mark 4	Mark 1	Mark 2	Mark 3	Mark 4	
Operator 1 - Read 1	1357924685	1357924712	1357924739	1357924766	X	6249475777	4028524204	7481103274	X	2526692356	6486358313	4518394282	240
Operator 1 - Read 2	1357924685	1357924712	1357924739	1357924766	X	6249475777	4028524204	7481103274	X	2526692356	6486358313	4518394282	
Operator 1 - Read 3	1357924685	1357924712	1357924739	1357924766	X	6249475777	4028524204	7481103274	X	2526692356	6486358313	4518394282	
Operator 1 - Read 4	1357924685	1357924712	1357924739	1357924766	X	6249475777	4028524204	7481103274	X	2526692356	6486358313	4518394282	
Operator 1 - Read 5	1357924685	1357924712	1357924739	1357924766	X	6249475777	4028524204	7481103274	X	2526692356	6486358313	4518394282	
Operator 1 - Read 6	1357924685	1357924712	1357924739	1357924766	X	6249475777	4028524204	7481103274	X	2526692356	6486358313	4518394282	

Coupon A1A-20

Encoded Data	Deep Laser Engrave				Dot Peen				Micro Mill				
	Mark 1	Mark 2	Mark 3	Mark 4	Mark 1	Mark 2	Mark 3	Mark 4	Mark 1	Mark 2	Mark 3	Mark 4	
	1357924687	1357924714	1357924741	1357924768	2309883702	776926648	3009740725	7538020209	4694896041	2039952643	4401637474	1169583898	
MXi Handheld	Deep Laser Engrave				Dot Peen				Micro Mill				Time (s)
	Mark 1	Mark 2	Mark 3	Mark 4	Mark 1	Mark 2	Mark 3	Mark 4	Mark 1	Mark 2	Mark 3	Mark 4	
Operator 1 - Read 1	X	X	X	X	X	X	X	X	X	X	X	X	225
Operator 1 - Read 2	X	X	X	X	X	X	X	X	X	X	X	X	
Operator 1 - Read 3	X	X	X	X	X	X	X	X	X	X	X	X	
Operator 1 - Read 4	X	X	X	X	X	X	X	X	X	X	X	X	
Operator 1 - Read 5	X	X	X	X	X	X	X	X	X	X	X	X	
Operator 1 - Read 6	X	X	X	X	X	X	X	X	X	X	X	X	
MS-Q Handheld	Deep Laser Engrave				Dot Peen				Micro Mill				Time (s)
	Mark 1	Mark 2	Mark 3	Mark 4	Mark 1	Mark 2	Mark 3	Mark 4	Mark 1	Mark 2	Mark 3	Mark 4	
Operator 1 - Read 1	X	X	X	X	X	X	X	X	X	X	X	X	255
Operator 1 - Read 2	X	X	X	X	X	X	X	X	X	X	X	X	
Operator 1 - Read 3	X	X	X	X	X	X	X	X	X	X	X	X	
Operator 1 - Read 4	X	X	X	X	X	X	X	X	X	X	X	X	
Operator 1 - Read 5	X	X	X	X	X	X	X	X	X	X	X	X	
Operator 1 - Read 6	X	X	X	X	X	X	X	X	X	X	X	X	

Coupon A1A-17 to A1A-20: Summary of Decoding Data After Processing

MXi Handheld	Deep Laser Engrave				Dot Peen				Micro Mill				Average
	Mark 1	Mark 2	Mark 3	Mark 4	Mark 1	Mark 2	Mark 3	Mark 4	Mark 1	Mark 2	Mark 3	Mark 4	Time (s)
A1A-17	Yes	Yes	Yes	Yes	Yes	Yes	Yes	Yes	Yes	Yes	Yes	Yes	3.8
A1A-18	No	No	No	No	No	No	No	No	No	No	No	No	3.3
A1A-19	Yes	Yes	Yes	Yes	No	Yes	Yes	Yes	Yes	Yes	Yes	Yes	3.5
A1A-20	No	No	No	No	No	No	No	No	No	No	No	No	3.1
MS-Q Handheld	Deep Laser Engrave				Dot Peen				Micro Mill				Average
	Mark 1	Mark 2	Mark 3	Mark 4	Mark 1	Mark 2	Mark 3	Mark 4	Mark 1	Mark 2	Mark 3	Mark 4	Time (s)
A1A-17	Yes	Yes	Yes	Yes	Yes	Yes	Yes	Yes	Yes	Yes	Yes	Yes	3.3
A1A-18	No	No	No	No	No	No	No	No	No	No	No	No	3.1
A1A-19	Yes	Yes	Yes	Yes	No	Yes	Yes	Yes	No	Yes	Yes	Yes	3.3
A1A-20	No	No	No	No	No	No	No	No	No	No	No	No	3.5

Coupon A1A-17 to A1A-20: Depth Data After Processing

Coupon A1A-17												
Depth Gage	Deep Laser Engrave				Dot Peen				Micro Mill			
	Mark 1	Mark 2	Mark 3	Mark 4	Mark 1	Mark 2	Mark 3	Mark 4	Mark 1	Mark 2	Mark 3	Mark 4
Measurement 1	0.0015	0.0030	0.0060	0.0095	0.0000	0.0030	0.0060	0.0110	0.0015	0.0030	0.0080	0.0115
Measurement 2	0.0015	0.0025	0.0060	0.0100	0.0005	0.0030	0.0060	0.0100	0.0015	0.0030	0.0075	0.0120
Measurement 3	0.0020	0.0030	0.0060	0.0095	0.0005	0.0035	0.0065	0.0110	0.0025	0.0030	0.0080	0.0110

Coupon A1A-18												
Depth Gage	Deep Laser Engrave				Dot Peen				Micro Mill			
	Mark 1	Mark 2	Mark 3	Mark 4	Mark 1	Mark 2	Mark 3	Mark 4	Mark 1	Mark 2	Mark 3	Mark 4
Measurement 1	0.0000	0.0010	0.0040	0.0050	0.0000	0.0000	0.0000	0.0030	0.0000	0.0000	0.0030	0.0070
Measurement 2	0.0000	0.0020	0.0030	0.0040	0.0000	0.0000	0.0005	0.0040	0.0000	0.0000	0.0020	0.0050
Measurement 3	0.0000	0.0010	0.0040	0.0040	0.0000	0.0000	0.0000	0.0020	0.0000	0.0000	0.0030	0.0060

Coupon A1A-19												
Depth Gage	Deep Laser Engrave				Dot Peen				Micro Mill			
	Mark 1	Mark 2	Mark 3	Mark 4	Mark 1	Mark 2	Mark 3	Mark 4	Mark 1	Mark 2	Mark 3	Mark 4
Measurement 1	0.0015	0.0030	0.0065	0.0100	0.0005	0.0010	0.0050	0.0110	0.0020	0.0040	0.0075	0.0110
Measurement 2	0.0015	0.0030	0.0065	0.0110	0.0000	0.0015	0.0055	0.0110	0.0020	0.0040	0.0080	0.0115
Measurement 3	0.0015	0.0030	0.0060	0.0110	0.0005	0.0010	0.0045	0.0100	0.0020	0.0035	0.0075	0.0110

Coupon A1A-20												
Depth Gage	Deep Laser Engrave				Dot Peen				Micro Mill			
	Mark 1	Mark 2	Mark 3	Mark 4	Mark 1	Mark 2	Mark 3	Mark 4	Mark 1	Mark 2	Mark 3	Mark 4
Measurement 1	0.0010	0.0020	0.0030	0.0050	0.0000	0.0000	0.0020	0.0040	0.0005	0.0010	0.0040	0.0050
Measurement 2	0.0010	0.0010	0.0030	0.0070	0.0000	0.0000	0.0010	0.0040	0.0000	0.0010	0.0030	0.0060
Measurement 3	0.0010	0.0015	0.0040	0.0050	0.0000	0.0005	0.0010	0.0030	0.0000	0.0005	0.0030	0.0050

Coupon A1A-17 to A1A-20: Summary of Depth Data After Processing

Coupon	Deep Laser Engrave				Dot Peen				Micro Mill			
	Mark 1	Mark 2	Mark 3	Mark 4	Mark 1	Mark 2	Mark 3	Mark 4	Mark 1	Mark 2	Mark 3	Mark 4
A1A-17	0.002	0.003	0.006	0.010	0.000	0.003	0.006	0.011	0.002	0.003	0.008	0.012
A1A-18	0.000	0.001	0.004	0.004	0.000	0.000	0.000	0.003	0.000	0.000	0.003	0.006
A1A-19	0.002	0.003	0.006	0.011	0.000	0.001	0.005	0.011	0.002	0.004	0.008	0.011
A1A-20	0.001	0.002	0.003	0.006	0.000	0.000	0.001	0.004	0.000	0.001	0.003	0.005
Average	0.001	0.002	0.005	0.008	0.000	0.001	0.003	0.007	0.001	0.002	0.005	0.009

APPENDIX D
READER MANUFACTURER SPECIFICATION SHEETS

RVSI MXi HANDHELD READER

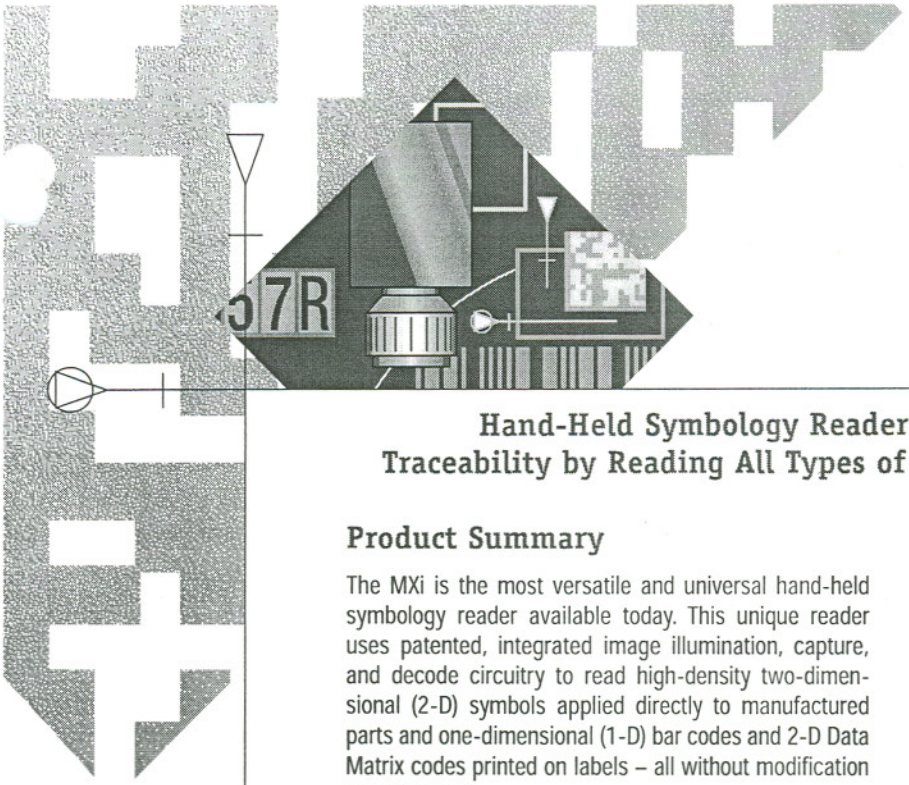

MXi

Hand-Held Symbology Reader Provides Cradle-to-Grave, Unit-Level Traceability by Reading All Types of Codes Under All Types of Conditions

Product Summary

The MXi is the most versatile and universal hand-held symbology reader available today. This unique reader uses patented, integrated image illumination, capture, and decode circuitry to read high-density two-dimensional (2-D) symbols applied directly to manufactured parts and one-dimensional (1-D) bar codes and 2-D Data Matrix codes printed on labels – all without modification or adjustment.

The MXi reader's adaptive optics provide both high resolution and a large field-of-view for more consistent, reliable decoding of high- and low-contrast marks. State-of-the-art video imaging technology and software allow the MXi to auto-discriminate between the major 1-D bar codes and 2-D codes, while providing cradle-to-grave unit-level traceability. Even parts with marks that are damaged or on challenging surfaces can now be identified during the manufacturing process and throughout the lifetime of the product.

The ergonomic design of the MXi allows it to be held comfortably in several positions for both close range and distance reading without any adjustment to the unit.

Features/Benefits

- Quick unit set-up
- Simple and fast programmability
- Reads 1-D bar codes and 2-D codes, high- and low-contrast
- Reads Data Matrix Direct Part Marks (DPMs) created with chemical etch, laser etch, dot peening, ink-jet and other techniques on a variety of surfaces
- Large depth of field – single unit reads at close range (1.6" or 4 cm) and at far range (up to 16" or 40.64 cm) without adjustment
- Easy and fast symbol decoding regardless of orientation
- Reads multiple symbols in the same field of view
- Advanced image processing algorithms and error correction
- Capture feature for imaging signatures, shipping manifest, employee ID badges, and other pertinent items
- Optional cradle available to provide fixed-position reading solution for 1-D bar codes and 2-D codes on any surface at variable distances
- Optional battery pack permits un-tethered reading capability
- Reads and stores up to 64,000 characters of data, transferable to a PC or PDA
- Flash memory technology allows on-site application updates/upgrades

Applications

- Reads DPMs at close and far range without any adjustments
- Consistent and accurate reading of DPMs in any manufacturing environment, particularly high-gloss and high-textured surfaces like those found on jet and automobile engines
- Diverse applications can be employed as a fixed-position reader, a hand-held reader, and an un-tethered, hand-held reader without modification

RVSI Acuity CiMatrix

Physical Characteristics

Dimensions:	8" H x 3.5" W x 3.5" D (20.3 cm H x 9 cm W x 9 cm D)
Power Requirements:	5 V, 1 A, 5 V nominal at 1 Amp

Performance Characteristics

Interfaces:	RS-232C, baud rates up to 115.2 Kbps
Field of View:	1-D: 1" to 6" (2.54 cm to 15.4 cm) 2-D: 1" to 4" (2.54 cm to 10.16 cm)
Depth of Field:	1-D: 1.6" to 16" for .005" to .015" features 4 cm to 40.64 cm for .13 mm to .38 mm features 2-D: 1.6" to 11" for .005" to .015" features 4 cm to 27.94 cm for .13 mm to .38 mm features
Minimum Element Size:	1-D: .005" (.13 mm) 2-D: .005" (.13 mm)
Optical Resolution:	640 x 480 pixels
Minimum Contrast Resolution:	1-D: 20% 2-D: 20%
Optical Parameters:	Pitch & Skew: +/- 35° Rotation: 360° Ambient Light: Full dark to full sunlight 10,000 ft-cd
Programming:	Flash memory for software upgrades Optional PC-based Graphical User Interface (GUI)
Decode Capability:	1-D: Code 39, Code 93, I2of5, Code 128, UPC/EAN, Postnet, BC412, Codabar 2-D: Data Matrix, PDF417

User Environment

Shock:	Drop – [illegible] ft to concrete (1.2 m)

Regulatory

Electrical Safety:	CE Compliant
Laser Safety:	CDRH Class II
EMI/RFI:	FCC Class B

Specifications subject to change without notice

RVSI
486 Amherst Street
Nashua, NH 03063
Tel. 603-598-8400
Fax 603-577-5965
www.rvsi.com

RVSI Asia
230 Victoria Street
#05 10-11 Bugis Junction Towers
Singapore 188024
Tel. + 65 336 5122
Fax + 65 336 2366

RVSI Europe
New Barnes Mill
Cottonmill Lane
St. Albans
Hertfordshire
AL1 2HA England
Tel + 44 1727 734690
Fax + 44 1727 865935

MXi 6/01 PDF

All referenced trademark product names are the property of RVSI. All other referenced product names are trademarks of their respective companies.

RVSI Acuity CiMatrix

MICROSCAN QUADRUS HANDHELD READER

MS-Q QUADRUS™ HAND HELD IMAGER

The MS-Q Quadrus™ imagers are optimized to read bar codes and 2D symbols that use direct part mark methods (DPM). It is the most aggressive hand held imager available for decoding symbols on low contrast substrates such as metal, plastic, rubber, and glass with marking methods such as dot peen and laser/chemical etch.

Containing custom optics and Microscan's Quadrus decode algorithms, the MS-Q combines the decoding power of Microscan's popular smart camera Quadrus EZ™ into a portable hand held device.

QUADRUS™ IMAGER FOR DIRECT MARK READING

Optical Options:

The MS-Q Quadrus™ hand held imager is available in two optical options:

- The high resolution version is custom designed to optimize resolution for reading small 2D symbols in direct part mark applications.
- The standard resolution version is suitable for reading all printed bar code methods plus many applications with directly marked symbols.

Applications:

Automotive and aero[illegible]stries are actively tracing all pa[illegible] codes or 2D symbols. The m[illegible]practices are to permanently i[illegible] Matrix or bar code symbol di[illegible] metal component surfaces.

Electronics manufact[illegible] track virtually all printed ci[illegible]s and most components by small [illegible] or Data Matrix symbols, typic[illegible] by laser or etched methods.

The MS-Q Quadrus™ [illegible]al for any application to track [illegible]rked with bar codes or 2D syn[illegible]

Ease of Use:

All MS-Q imagers feature point-and-click targeting with a red laser spot to quickly center the symbol in the field of view. Beeper, vibrator, and multi-purpose LEDs provide real-time feedback to signal successful decoding.

System Integration:

All MS-Q imagers are available in 3 configuration options that provide effortless connectivity:

- **Batch:** A wireless way to collect thousands of decoded symbols for later download, capable of performing more than 4000 reads from a single battery charge and buffer a minimum of 1 MB of data in non-volatile memory.*
- **Cabled:** Cabled units can be connected in two ways: USB and RS-232.
- **Bluetooth:** Wireless data transmission using Bluetooth™ class 1 radio with a 328' (100 m) operating range.

*For batch and Bluetooth options a 1300 mA Lithium-Ion battery is included.

Symbologies:

The MS-Q Quadrus™ imagers read the following codes:

- Data Matrix (ECC 0-200)
- PDF417 *
- UCC Composite *
- Standard Linear Bar Codes *

*Available in Q2 2004

MS-Q Accessories:

- Long-life 1300 mA lithium-Ion battery
- Bluetooth modem (serial gateway) with 328' (100 m) operating range
- Two-bay battery charger
- RS-232 kit

MICROSCAN.

MS-Q QUADRUS™ IMAGER FO RECT PART MARK READING

SPECIFICATIONS AND OPTIONS

IMAGER MECHANICAL

Height: 1.3" (33 mm)
Width: 1.8" (46 mm)
Depth: 4.3" (109 mm)
Weight: 2.5 oz. (71.5 g), not including cable

HANDLE MECHANICAL

Height: 3.8" (96.5 mm)
Width: 1.2" (30mm)
Depth: 1.4" (36 mm)
Weight: 1.2 oz. (59.8 g)

ADDITIONAL PHYSICAL CHARACTERISTICS

Battery Weight: 2.1 oz. (59.5 g)
Battery Blank: .5 oz. (13.6 g)
Cable Length: 6' (1.8 m)

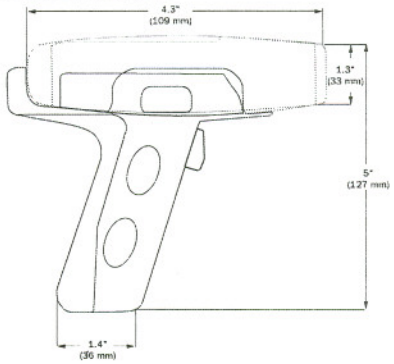

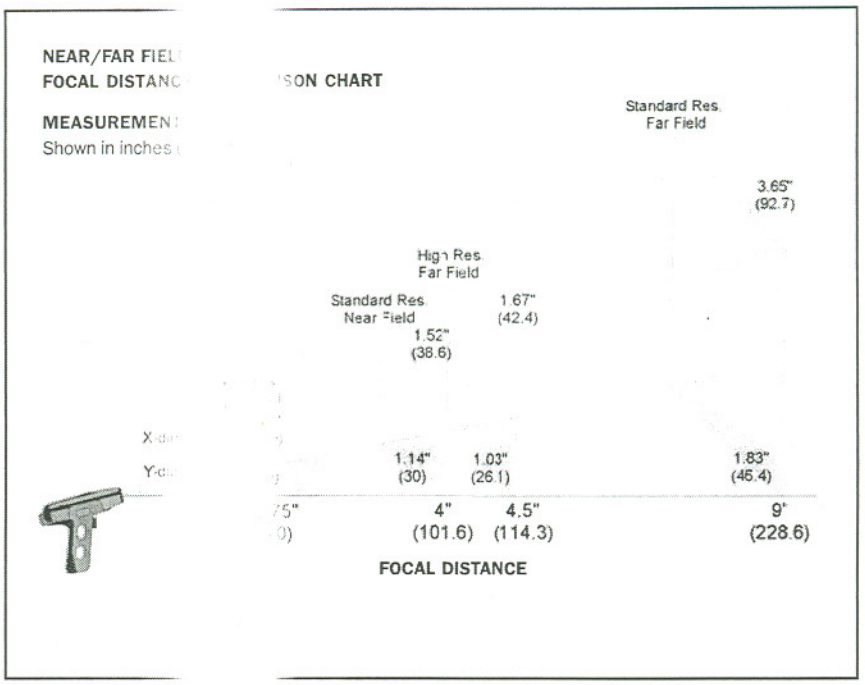

ENVIRONMENTAL

Operating Temperature: 0° to 40°C (32° to 104°F)
Storage Temperature: -20° to 60° C (-4 to 140°F)
Humidity: 5 to 90% (non-condensing)

CE STANDARDS

Immunity: EN 55024
ESD: EN 61000-4-2 **Radiated RF:** EN61000-4-3
Keyed Carrier: ENV50204 **EFT:** EN61000-4-4
Conducted RF: EN61000-4-6,
Emissions: EN55022, Class B Radiated, Class B Conducted

LIGHT COLLECTION OPTIONS

Sensor: CMOS, progressive scan, 1.33 MP (1024 by 1280), 256 gray scale
Standard Resolution Field of View:
Near: 21.5° horizontal by 16.2° vertical
Far: 22.9° horizontal by 11.6° vertical
High Resolution Field of View:
Near & Far: 21° horizontal by 13° vertical
Standard Resolution Focal Point:
Near: 4"(101.6 mm)
Far: 9" (228.6 mm)
High Resolution Focal Point:
Near: 2.75"(70 mm)
Far: 4.5" (115 mm)
Sensor Array:
Near Field: 1024 by 640 (default)
Far Field: 1024 by 640 (default)

SYMBOLOGY TYPES

Linear Bar Codes: Code 39, Code 128, I2 of 5, RSS, and UPC/EAN (available Q2 2004)
Stacked Symbologies: PDF417, UCC Composite (available Q2 2004)
2D Symbologies: Data Matrix (ECC 0-200)

READ PARAMETERS

Pitch: ±60° (front to back) **Skew:** ±60° **Tilt:** 360°
Focal Range: 1 to 20" (25 to 508 mm)
Rotational Tolerance: ±180°
Print Contrast Resolution: 25 percent (bar codes); 35 percent (PDF417); absolute dark/light reflectance differential, measure at 650 nm.
Target Beam: Visible Laser Diode at 630 nm. Class 2
Ambient Light Immunity: Sunlight: Up to 9,000 ft-candles 96,890 lux
Shock: Withstands multiple drops of 6.5' (2 meters) to concrete

READ RANGES

Narrow Bar-Width	Distance
.005" (.127 mm)	4.4 to 63.5 mm)
.0075" (.191 mm)	4 to 101.6 mm)
.010" (.254 mm)	4.4 to 102.6 mm)
.015" (.381 mm)	4 to 152.3 mm)
.020" (.508 mm)	4.4 to 165.1 mm)

MS-Q is set to continuo
above results.

INDICATORS

LED Indicators: Me
Successful decode, a
Programmable Indic
communicates scan
functions to user

IMAGE OUTPUT OP

Format: Jpeg, Raw (u
Time Stamp: Interva

COMMUNICATION

Standard Interface:
Optional Interface:
Radio at 328' (100

ELECTRICAL

Power Requirement
Typical: 310 **Peak:**

Bluetooth Radio at 2
Typical: 280 **Peak:**

Bluetooth Radio a
Typical: 260 **Peak:**
Battery Life: Batte
4000 read/trans
standby interval.

SAFETY CERTIFIC

Designed for: FCC,

ISO CERTIFICATIO

ISO 9001/Cert. No.

tery power,
status
Vibrate option;
communication

th Class 1

(mA):
:3

mA):
:3
pport
ding 8 hours of

FIELD OF VIEW, STANDARD RESOLUTION

Near Field of View	
Distance (inches/mm)	**Field of View Size** (1024 x 640 pixel, Default)
4" (101.6)	1.52 X 1.14" (38.6 x 30 mm)
Far Field of View	
9" (228.6)	3.65 X 1.83" (92.7 x 46.4 mm)

FIELD OF VIEW, HIGH RESOLUTION

Near Field of View	
Distance inches/mm	**Field of View Size** (1024 x 640 pixel, Default)
2" (50.8)	.74 X .46" (18.8 x 11.6 mm)
2.5" (63.5)	.93 X .57" (23.5 x 14.5 mm)
2.75" (69.9)	1.02 X .63" (25.9 x 15.9 mm)
3" (76.2)	1.11 X .68" (28.3 x 17.4 mm
3.5" (88.9)	1.3 X .80" (33 x 20.3 mm)
4" (101.6)	1.48 x .91" (37.7 x 23.2 mm)
Far Field of View	
2" (50.8)	.74 X .46" (18.8 x 11.6 mm)
2.5" (63.5)	.93 X .57" (23.5 x 14.5 mm)
3" (76.2)	1.11 X .68" (28.2 x 17.4 mm)
3.5" (88.9)	1.3 X .80" (32.9 x 20.3 mm)
4" (101.6)	1.48 X .91" (37.6 x 23.2 mm)
4.5" (114.3)	1.67 X 1.03" (42.4 x 26.1
5" (127)	1.85 X 1.14" (47.1 x 28.9 mm)
5.5" (139.7)	2.04 X 1.25" (51.8 x 31.8 mm)
6" (152.7)	2.22 X 1.37" (56.5 x 34.7 mm)
6.5" (165.1)	2.41 X 1.48" (61.2 x 37.6 mm)

MICROSCAN

Microscan Systems, Inc.
Tel 425 226 5700/ 800 251 7711
Fax 425 226 8250
Microscan Europe
Tel 31 172 423360/ Fax 31 172 423366
Microscan Asia Pacific R.O.
Tel 65 6846 1214 / Fax 65 6846 4641
www.microscan.com
Tech Support: helpdesk@microscan.com
Product Information: info@microscan.com

©2004 Microscan Systems, Inc.

Specifications subject to change, 02/04 - Base A