# APPENDIX B
# COUPON MANUFACTURING DOCUMENTATION

**S2A COUPON**

## COUPON

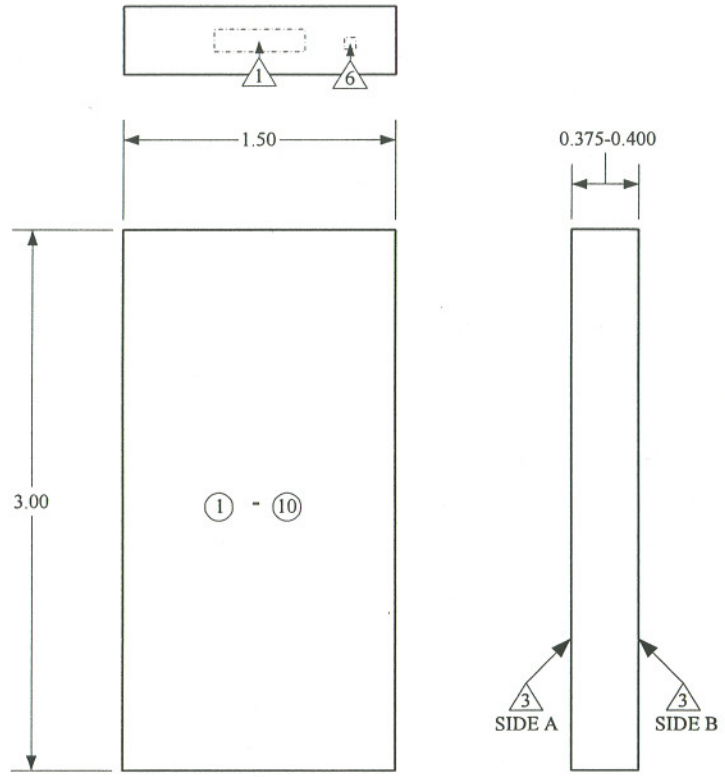


## NOTES

1. SERIALIZE THE COUPONS S2A-O1 TO S2A-12 AT NOTED LOCATION USING 0.25 IMPRESSION STAMP,0.004-0.008 DEEP
2. HEAT TREAT AND PROCESS TO 260-280 KSI ULTIMATE TENSILE STRENGTH PER AMS-H-6875, MAXIMUM ALLOWABLE DECARBURIZATION 0.003
3. $0.025\sqrt{\frac{125}{M}}\sqrt{64}$ BEFORE 2, $\sqrt{\frac{125}{M}}\sqrt{64}$ AFTER 2
4. BREAK ALL SHARP EDGES 0.005-0.015
5. FLUORESCENT MAGNETIC PARTICLE INSPECT PER ASTM E1444
6. FOR COUPONS WITH EVEN SERIAL NUMBERS: PERFORM ROCKWELL HARDNESS C TEST PER ASTM A370 AT NOTED LOCATION
7. FOR COUPONS WITH EVEN SERIAL NUMBERS: PERFORM SURFACE ROUGHNESS MEASUREMENT PER ASME B46.1

(1) – (10) MARK SIDE A WITH DATA MATRIX™ SYMBOLS

| | | | | | | |
|---|---|---|---|---|---|---|
| ALGLE PROGRAM | TITLE: COUPON | DRAWING NUMBER: S2A | REVISION: B | DIMENSIONS: ALL DIMENSIONS IN INCHES | TOLERANCES: UNLESS OTHERWISE NOTED X.X = ± 0.1, X.XX = ± 0.05, ANGLES = ± 0.5° | DRAWN: JOHN COATES |
| DPM EVALUATION | MATERIAL: 4340 PER AMS 6415 | DATE: 10/18/00 | SHEET: 1 OF 1 | SCALE: NOT TO SCALE | | CHECKED: FRANK ZUECH |

**Northwest Machining and Mfg., Inc.**
1957 LANARK STREET • MERIDIAN, IDAHO 83642
PHONE (208) 888-5334 • FAX (208) 888-0917
e-mail nwmm@micron.net

Date: 12/02/00

Job Order Number: 14554

Customer: GENERAL ATOMICS

Part Number: S2A REV: ~~A~~ B

Description: COUPON DEC 02 2000

Quantity: 12

Purchase Order Number: H030105

Customer Supplied Material? NO

CERTIFICATION OF CONFORMANCE

NORTHWEST MACHINING & MFG., INC., DOES HEREBY CERTIFY THAT PARTS MANUFACTURED UNDER THE ABOVE NOTED PURCHASE ORDER WERE PRODUCED AS STIPULATED BY THAT PURCHASE ORDER.

IT IS FURTHER CERTIFIED THAT TEST REPORTS VERIFYING COMPLIANCE WITH DESIGN STANDARDS, MATERIAL CONTROLS, & INSPECTION REQUIREMENTS NOTED ON THE PURCHASE ORDER, ARE ON FILE AND AVAILABLE UPON REQUEST.

SIGNED: Sid Harmon
SID HARMON / (QCM)

# INSPECTION REPORT

MAT'L: 4340
SPEC: ASTM - 6415
P.O./CERT: EMJH T-145494 *
SHEET ____ OF ____
LOT # 8079450

.X +/- .1
.XX +/- .05
.XXX +/- ____
ANGLE +/- .5°

CUSTOMER: GENERAL ATOMICS
P/O #: H 030105
DRWG #: S2A
PART NAME: COUPON
DCN: ____

JOB #: 14554
S/O #: ____
REV #: 13
QTY: 12
ADCN: ____

| DIM NO. | CHARACTERISTIC OR DIMENSIONAL NOTATION | FIRST PART | BY | DATE | INPROCESS INSP. | BY | DIMENSION OF RESPECTIVE PARTS HI / LO | | | | | | BY | DATE |
|---|---|---|---|---|---|---|---|---|---|---|---|---|---|---|
| 1 | 1.50 | 1.500 | | NOV 30 2000 | | | 1.500 | 1.501 | | | | | NW 2 | NOV 30 2000 |
| 2 | .375 - .400 | .378 .380 | | | | | .388 | .378 | | | | | | |
| 3 | 3.00 | 3.000 | | | | | 3.001 | 2.999 | | | | | | |
| 4 | .25 X .004 - .008 | .232 +.005 -.006 | NW 2 | NOV 30 2000 | | | .232 +.005 -.006 | | | | | | NW 2 | NOV 30 2000 |
| | | | | | | | | | | | | | | |
| | | | | | | | 02 | 04 | 06 | 08 | 10 | 12 | | |
| 5 | 64-125 FINISH BEFORE HT.TR. | | | | | | A-116 B-112 | A-106 B-110 | A-114 B-116 | A-114 B-116 | A-114 B-112 | A-112 B-106 | | |
| 6 | 64-125 FINISH AFTER HT.TR. | | | | | | A- 116 B- 110 | A- 108 B- 110 | A- 114 B- 114 | A- 114 B- 118 | A- 116 B- 112 | A- 112 B- 108 | | |
| 7 | RC TEST BEFORE HT.TR. | | | | | | Rc21 | Rc20 | Rc20 | Rc21.8 | Rc20.5 | Rc21 | | |
| 8 | RC TEST AFTER HT. TR. | | | | | | RC50.5 | RC50.5 | RC51 | RC50.5 | RC51 | RC50.5 | | |
| | | | | | | | | | | | | | | |
| A | HT.TR. 260-280 KSI PER MIL-H-6875 | Pacific Metallurgical # 270015 | | | | | (12) | NW 3 DEC 02 2000 | | | | | | |

QTY INSPECTED 12 BY NW 3 ACCEPTED 12 REJ 0

DEC 02 2000

# Diamond H Testing Laboratories

3640 U.S. Highway 30, Pocatello, Idaho 83201
Phone 208/232-2663 Fax 208/232-2772

Report No. 1177

## Certified Inspection Report

ASNT SNT-TC-1A

| | | |
|---|---|---|
| Customer: Northwest Machine | Date: 12-2-00 | DHT Job No.: 00-0601-12 |
| Project Description: | P.O No: 14731 | Customer Job. No.: |
| Job Location: DHT Boise | Percent Inspected: 100% | DHT Procedure No.: 1200 |
| Surface Condition: AS welded | Type of Material: Steel 4340 | Temperature of Material: Ambient |
| Heat Treat: Before / After | Acceptance Standard: ASTM E1444 | Inspection Standard: Ambient |
| Type of inspection: (MT) / PT | Type of Work: (New) / Repair | |

**MT** — MT Equipment: STATIONARY; Dry ___ / Wet X; Visible ___ / Fluorescent X; AC X / DC ___; Prod Spacing ___ / Coil X; Mag Particle color: florescent

**PT** — Penetrant material: ___; Water washable ___ / Solvent ___ / Visible PT ___ / Fluorescent ___; Dwell time: ___; Develop Time: ___; Dry ___ / Wet ___

DEFECT CODE: IP - Incomplete penetration; IF - Incomplete fusion; UC - Undercut; C - Crack; P - Porosity; S - Slag

| Serial No., Piece No., Part No. | Accept | Reject | Defect code | Comments |
|---|---|---|---|---|
| JN 14552 S1A-01 thru 22 | / | | | 22 pieces |
| JN 14553 S1B-01 thru 16 | / | | | 16 pieces |
| JN 14554 S2A-01 thru 12 | / | | | 12 pieces |
| JN 14555 S2B-01 thru 06 | / | | | 6 pieces |

NTW 9 DEC 0 2 2000

The recorded results are the opinion of the technician to the best of his knowledge based on the information provided to him by the customer at the time of the inspection.

| | | |
|---|---|---|
| Customer: Bob McCann | Technician: Michael Heil | Level II |
| | Assistant Technician: Brian Gentzman | Level |

Pacific Metallurgical, Inc.
925 5th Ave. S., P.O. Box 399
Kent, Washington 98035
Phone: 854-4241 Fax: 854-4475

TI

No. 270215

NORTHWEST MACHINING & MFG INC
1957 Lanark Street

Meridian, Id 83642

| DATE REC'D: | DATE SHIPPED: | INVOICE DATE: |
|---|---|---|
| 11/30/00 | | |

SPECIFICATION: AMS-2759/2B

| MATERIAL: | TENSILE KSI: | ROCKWELL REQUIRED: |
|---|---|---|
| 4340 | 260-280 | BELOW |

| CUST. P.O.: | WEIGHT: | LAB REQUIRED: |
|---|---|---|
| 14723/14724 | | SURFACE CONTAMINATION 50.5-53 HRC |

| HOW REC'D: | HOW SHIP: | NO. PIECES: | PART NO. & NAME: |
|---|---|---|---|
| T-T | T-T | 22 | S1A, REV. A, JOB # 14552 |
| REMARKS: | | 12 | S2A, REV. A, JOB # 14554 |

| | | | |
|---|---|---|---|
| TEMPERATURE: | 1500°F | 425°F | 475°F |
| TIME IN: | 11:10 | 3:35 | 6:20 |
| TIME HELD AT TEMPERATURE: | 1hr | 2hrs | 2hrs |
| TIME OUT: | 1:25 | 6:05 | 8:45 |

Received Above Material Subject to Terms and Conditions on Reverse Side

AUTHORIZED SIGNATURE

- ☐ LAB TEST PERFORMED BY CUSTOMER
- ☐ PASSIVATED BEFORE H.T. PER BAC 5625 & 5619
- ☐ CLEANED AFTER H.T.
- ☐ COPPER PLATE PER BAC 5722 & MIL-C-14550
- ☐ STRIP COPPER & OIL PER BAC 5771
- ☐ D - 2 TEST RESULTS 15N _____ RA _____
- ☐ PROCESSED PER BAC 5619 EXCEPT NO CLEANING AFTER HEAT TREAT
- ☐ BAKED AFTER STRIP @ _____ °F FOR _____ HRS
- ☐ PROCESSED IN VACUUM FOR D1/D2 CONTROL
- ☐ OILED
- ☐ RAW STOCK NO PASSIVATE RQD

**CERTIFICATION**

WE HEREBY CERTIFY THAT ALL HEAT TREATMENT GIVEN THE ABOVE MATERIAL AND ALL HARDNESS TESTING WAS DONE BY APPROVED METHODS AND INDUSTRY STANDARDS. PROPRIETORY AND GOVERNMENT SPECIFICATIONS (WHEN APPLICABLE) WERE FOLLOWED AND RECORDS OF SUCH HEAT TREATMENT IS ON FILE AND TRACEABLE BY DOCUMENTS. COPIES OF LAB TEST REPORTS AND FURNACE REPORTS ARE AVAILABLE AT NORMAL FEES IF REQUIRED.

PMI 26

QUALITY CONTROL APPROVAL

12-1-00
DATE

HARDNESS TEST BY B. Fmy

NO. OF PIECES 34

RESULTS 50.5-53 HRC

DATE 12-1-00

LAB NO.

PARTS RELEASED
SUBJECT TO LAB REPORT

NW 3

DEC 02 2000

FINAL TEMPER/AGE 475°F

PACKING SLIP - CERTIFICATION

# PACIFIC METALLURGICAL LABORATORY

825 S.5th Ave., P.O.Box 399
Kent, WA., 98031
(253) 854-4241

DATE: 12/5/00

LAB NO: 11367-12103

CUSTOMER: NW MACHINING & MFG.

CUSTOMER P.O: 14723/14724

PART NO: S1A, S2A

CONDITION: 260-280ksi
(Coupon as Quenched)

PMI JOB NO: 270215

MATERIAL: 4340

SPECIFICATION: SEE BELOW

TEST TYPE: SURFACE CONTAMINATION DETERMINATION

## TEST RESULTS

DECARBURIZATION DETERMINATION, KNOOP, 500grams.

| Depth (inches) | HK500 | HRC |
|---|---|---|
| 0.00013 | 822.3 | 54.8 |
| 0.00026 | 870.2 | 57.0 |
| 0.00039 | 892.4 | 58.1 |
| 0.00052 | 895.5 | 58.3 |
| 0.00065 | 700.1 | 58.5 |
| 0.00078 | 895.5 | 58.3 |
| 0.00090 | 711.0 | 59.0 |
| 0.00103 | 718.0 | 59.4 |
| 0.00300 | 883.0 | 56.7 |
| 0.00500 | 851.8 | 56.1 |
| 0.01000 | 846.3 | 55.8 |
| Average Core: | 851.8 | 56.1 |

INTERGRANULAR OXIDATION DETERMINATION, MAG. 500X

Depth of Intergranular Oxidation: 0.0002 in.

## SPECIFICATION COMPLIANCE SUMMARY

| SPECIFICATION | PASS/FAIL |
|---|---|
| MIL-H-6875h(>220ksi) | PASS |
| AMS2759/2B(>220ksi) | FAIL |

PMI 25 12-5-00

NOTE: Hardness Conversions Per ASTM A370, Table 2A.

Respectfully Submitted,

Michael P. Wells

YOUR EMJ BRANCH LOCATION:

**Earle M. Jorgensen Company**
6650 NORTH ENSIGN STREET
PORTLAND,OR 97217

# Invoice

## OUR INFORMATION

| | |
|---|---|
| INVOICE NUMBER | T145494271 |
| CUSTOMER NUMBER | 70016 |
| DATE | 10-NOV-00 |
| SHIPPED ON DOCUMENT NUMBER | T145494271 |

SOLD TO:

NORTHWEST MACHINING & MFG.

1957 LANARK STREET
MERIDIAN,ID 83642

## YOUR INFORMATION

| | |
|---|---|
| ORDERED BY | VIVIAN |
| DATE ORDERED | 09-NOV-00 |
| PO # | 14629 |

## YOUR ORDER

| ITEM DESCRIPTION | QTY. DESC. | SHIPPED | X UNIT PRICE | = EXT. PRICE |
|---|---|---|---|---|
| E4340 CD N & T AQ BAR MIL S 5000 C<br>1/2 X 2-1/2 FLAT X 12' R/L<br>Part # JOB # 14554 & 14555 | 1 Bar | 51.04<br>LB | 4.97<br>LB | 253.71 |

14554 14555 ~~Backord~~ G.A

RECEIVED
NOV 17 2000

Thank You.
Remember EMJ, accepts VISA, MasterCard and American Express at point of sale.

Check out e-metals, EMJ's new customer information and order processing system at www.emjmetals.com.

For further information about your order, please contact your materials specialist:

LARRY
AT 503 2832251
EMJ - PORTLAND
SERVICE CENTER

PAGE 1 OF 1
Form: FOONYY

We hereby certify that the goods and services covered by this invoice were produced in compliance with the fair labor standards act, as amended, and the regulations thereunder. Terms and conditions: The complete terms and conditions of sale are stated on the reverse side of this invoice. Aluminum Product Net 30 Days. Black Pipe Products 2%10 Days Net 30. Unit price is displayed in two decimal places but priced by four.

| | | |
|---|---|---|
| TOTAL MATERIALS AND SERVICES | $ | 253.71 |
| SALES TAX | $ | |
| INVOICE TOTAL | $ | 253.71 |

## SHIPPING INFORMATION

| | |
|---|---|
| SHIPPING DATE | 09-NOV-00 |
| FREIGHT PAYMENT | PREPAID |
| FOB | D |
| SHIPPED VIA | VIKING |

SHIPPING ADDRESS:
N.W. MACHINING & MANUFACTURING

1957 LANARK STREET
MERIDIAN,ID 83642

---

TEAR OFF THIS SLIP AND RETURN WITH CHECK PAYABLE TO:
Earle M. Jorgensen Company
DEPT 0934
LOS ANGELES,CA 900840934
(REMITTANCE ADDRESS ONLY)

| | | |
|---|---|---|
| INVOICE NUMBER | | T145494271 |
| INVOICE TOTAL | $ | 253.71 |

## PAYMENT TERMS

1/2% 10 DAYS NET 30
Except Aluminum - ALUMINUM Net 30

# CERTIFICATE OF TEST



Certification Date
13-NOV-2000

**CUSTOMER ORDER NUMBER**
14629

**CUSTOMER PART NUMBER**

6650 NORTH ENSIGN STREET
PORTLAND OR 97217

Invoice Number
T145494

Ship# T649517

**SOLD TO:** NORTHWEST MACHINING & MFG.
1957 LANARK STREET
MERIDIAN ID 83642

**SHIP TO:** N.W. MACHINING & MANUFACTURING
1957 LANARK STREET
MERIDIAN ID 83642

Description: E4340 CD N & T AQ BAR MIL S 5000 CND E4
1/2 X 2-1/2 FLAT X 12' R/L Line Total: 51.048 LB
HEAT: 8079450 ITEM: 508601

Specifications:
MIL S 5000 E AMS 2301 AMS 6415 M

CHEMICAL ANALYSIS

| C | MN | P | S | SI | CU | NI | CR |
|---|---|---|---|---|---|---|---|
| 0.41 | 0.75 | 0.01 | 0.022 | 0.2 | 0.21 | 1.66 | 0.79 |

| MO | AL |
|---|---|
| 0.25 | 0.018 |

RCPT: R157189
MILL : REPUBLIC ENGINEERED STEELS,INC COUNTRY OF ORIGIN : USA

MECHANICAL PROPERTIES

| DESCRIPTION | YLD STR | ULT TEN | %ELONG IN 00 IN | %RED IN AREA | HARDNESS BHN |
|---|---|---|---|---|---|
| | | | | | 228 |

NOV 16 2000
NW 3

The above data were transcribed from the manufacturer's Certificate of Test after verification for completeness and specification requirements of the information on the certificate. All test results remain on file subject to examination.

We hereby certify that the material covered by this report will meet the applicable requirements described herein, including any specification forming a part of the description.

The willful recording of false, fictitious, or fraudulent statements in connection with test results may be punishable as a felony under federal statutes.

Material did not come in contact with mercury while in our possession.

LINDY FARR

MANAGER, QUALITY ASSURANCE

# CERTIFICATE OF TEST



Certification Date
13-NOV-2000

**CUSTOMER ORDER NUMBER**

14629

**CUSTOMER PART NUMBER**

6650 NORTH ENSIGN STREET
PORTLAND OR 97217

Invoice Number
T145494

Ship# T649517

**SOLD TO:** NORTHWEST MACHINING & MFG.
1957 LANARK STREET
MERIDIAN ID 83642

**SHIP TO:** N.W. MACHINING & MANUFACTURING
1957 LANARK STREET
MERIDIAN ID 83642

Description: E4340 CD N & T AQ BAR MIL S 5000 CND E4
1/2 X 2-1/2 FLAT X 12' R/L Line Total: 51.048 LB
HEAT: 8079450 ITEM: 508601
END-QUENCH HARDENABILITY (JOMINY - RC) IN
6 20 32
57 5 48

---

GRAIN SIZE :7 -

---

INGOT CAST MATERIAL IS FREE FROM MERCURY CONTAMINATION
DECARB: OK
MACRO: OK
AMS NO :2301
SEVERITY :0.0
FREQUENCY:0.0

---

COMMENTS
HOT MILL: REPUBLIC
FINE GRAIN
DECARB .012"

NOV 16 2000 NW 3

The above data were transcribed from the manufacturer's Certificate of Test after verification for completeness and specification requirements of the information on the certificate. All test results remain on file subject to examination.

We hereby certify that the material covered by this report will meet the applicable requirements described herein, including any specification forming a part of the description.

The willful recording of false, fictitious, or fraudulent statements in connection with test results may be punishable as a felony under federal statutes.

Material did not come in contact with mercury while in our possession.

LINDY FARR

MANAGER, QUALITY ASSURANCE

Earle M. Jorgensen Company

FROM: E.M.J. - LOS ANGELES
10650 S ALAMEDA ST
* DUPLI
LYNWOOD

**S.I.D. ORDER NO.** T145494
ORDERED BY: 00271
* PHONE: VIVIAN
CUST. ORD. NO.: 208 888-5334
14629
PAGE 1 OF 1

SOLD TO

SHIP TO: N.W. MACHINING & MANUFACTURING
1957 LANARK STREET
MERIDIAN ID 83642
000

00271 T145494 CT
XFER # 00459 T649517

| DATE ORD. | CUSTOMER P.O. | | F.O.B. | DEL AREA | | VIA | | CUST. ACCT. | PROM. DATE |
|---|---|---|---|---|---|---|---|---|---|
| 09-NOV-00 | 14629 | | D | 0 | | VIKNG | | 70016 | 13-NOV-00 |
| ORDER WGT. | I/S 106 | TERR. | TYPE | TAX RATE | PPD/COLL | C.O.D. | TEST REPORT | | SHIP DATE |
| 51.05 | 106 | | CT | | P | 4 | Y PRO#: | Y | 09-NOV-00 |

*** To be DIRECT SHIPPED from Branch 00459

---

508601 E4340 CD N & T AQ BAR MIL S 5000 CND E4
1 Bar 1/2 X 2-1/2 FLAT X 12' R/L 51.0480 LB
YEL W/FT 4.2540 EXT WGT: 51
PART# JOB# PO LN
Fills TRANSFER From Invoice # T145494/Line # 1
HEAT # 8079450 LOCATION:5-02-15-06 Y
1 BAR 1
5B

NOV 16 2000
NW 3

RECEIVED ABOVE GOODS ON TERMS AND CONDITIONS APPEARING ON BACK OF INVOICE X

| INVOICE AMT. | ADDITIONAL CHARGES | V.A.T. TAX | TAX/AMT. | TOTAL |
|---|---|---|---|---|
| | | | | |

| NO. OF PKGS. | PKG. TYPE | NO. OF PKGS | PKG. TYPE | TOTAL PCS. | DESCRIPTION OF ARTICLES | SHIP WGT. | CLS |
|---|---|---|---|---|---|---|---|
| 1 | Ttl | | | 1 | IRN/STL BAR 104 | 51 | 050 |
| | | | | | | | |
| | | | | | | | |
| | | | | | | | |
| | | | | | | | |
| | | | | 1 | TOTAL | 51 | |

PACKING SLIP

FREIGHT CHARGES ARE TO BE PRE-PAID UNLESS THIS BLOCK IS CHECKED. ☐
Subject to Section 7 of conditions, if this shipment is to be delivered to the consignee without recourse on the consignor, the consignor shall sign the following statement. The carrier shall not make delivery of this shipment without payment of freight and all other lawful charges.
(Signature of Consignor)

CARRIER SEND FREIGHT BILL TO:
EMJ - PORTLAND
6650 NORTH ENSIGN STREET
PORTLAND OR 97217
SHIPPER PER X

C.O.D. AMOUNT

C.O.D. FEE TO BE PAID BY
SHIPPER ☐ CONSIGNEE ☐

CARRIER
AGENT
PER:

☐ SEE BACK OF MEMO COPY

DATE 00/11/13 11/15

2852184

FOR QUESTIONS CALL CUSTOMER SERVICE (800) 845-4647

00/11/14 02:05:15

FREIGHT BILL PRO# 796287035

viking freight

P.O. BOX 649001
SAN JOSE, CA 95164-9001
1-800-VIKINGS (1-800-845-4647)
www.vikingfreight.com
CAL. T84,649 (VIKN)

*A FedEx Company*

SHIPPER
EARLE M JORGENSEN CO L
10650 ALAMEDA ST
LYNWOOD CA 902621

PRO # 796287035
ROUTING PAGE 1 OF 1
WHT/BSE-248
13263/999999

CONSIGNEE BILL: PRT650NNPR REF. #
NW MACHINING AND MFG
1957 LANARK ST SH# T145494
MERIDIAN ID 83642

CONSIGNEE COPY
IL

PO# 14629N

| UNITS | HM | DESCRIPTION | WEIGHT IN LBS | RATE | CHARGES | |
|---|---|---|---|---|---|---|
| 1 | | IRN/STL BAR<br>MINIMUM SHIPMENT<br>FUEL SURCHARGE<br>FUEL SURCHARGE IS 4.00% | 51 | | | CODE<br>DATE<br>EMP# |
| 1 | | | 51 | | | |

11/15

Responsiveness. It means Viking.

| PCS | DATE | TIME | DRVR# | RECEIVED IN GOOD ORDER EXCEPT AS NOTED | | SURCHARGE | | AMT. COLLECTED |
|---|---|---|---|---|---|---|---|---|
| 1 | 11-15 | 1115 | 1674 | PRINT RECEIVER'S LAST NAME | RECEIVING CO-NAME | AMT. DUE | PREPAID | |

TRANSPORTATION PROVIDED PER THE TERMS AND CONDITIONS OF THE BILL OF LADING, AND THE GOVERNING NATIONAL MOTOR FREIGHT CLASSIFICATION, AND CARRIER'S TARIFF. LIABILITY LIMITATIONS MAY APPLY.

**S2B COUPON**

## COUPON

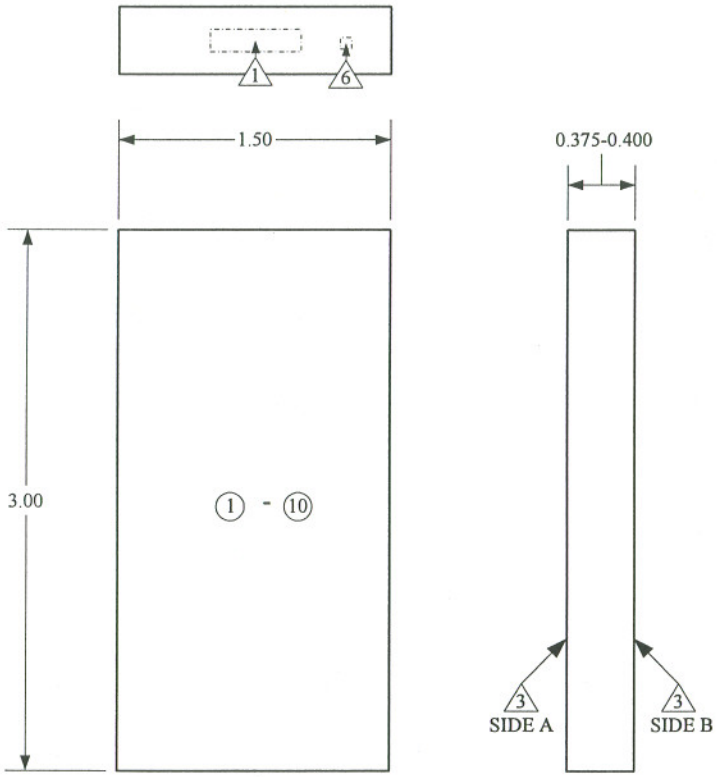


## NOTES

1. SERIALIZE THE COUPONS S2B-01 TO S2B-06 AT NOTED LOCATION USING 0.25 IMPRESSION STAMP,0.004-0.008 DEEP
2. HEAT TREAT AND PROCESS TO 260-280 KSI ULTIMATE TENSILE STRENGTH PER AMS-H-6875, MAXIMUM ALLOWABLE DECARBURIZATION 0.003
3. $0.025\ \frac{125/\ 64}{\nabla\ M}$ BEFORE 2, $\frac{125/\ 64}{\nabla\ M}$ AFTER 2
4. BREAK ALL SHARP EDGES 0.005-0.015
5. i) FLUORESCENT MAGNETIC PARTICLE INSPECT PER ASTM E1444
   ii) INSPECT BEFORE AND AFTER MARKING (1) – (10)
6. FOR COUPONS WITH EVEN SERIAL NUMBERS: PERFORM ROCKWELL HARDNESS C TEST PER ASTM A370 AT NOTED LOCATION
7. FOR COUPONS WITH EVEN SERIAL NUMBERS: PERFORM SURFACE ROUGHNESS MEASUREMENT PER ASME B46.1

(1) – (10) i) MARK BEFORE 2
ii) MARK SIDE A WITH DATA MATRIX™ SYMBOLS

| | | | | | | |
|---|---|---|---|---|---|---|
| ALGLE PROGRAM | TITLE: COUPON | DRAWING NUMBER: S2B | REVISION: B | DIMENSIONS: ALL DIMENSIONS IN INCHES | TOLERANCES: UNLESS OTHERWISE NOTED X.X = ± 0.1, X.XX = ± 0.05, ANGLES = ± 0.5° | DRAWN: JOHN COATES |
| DPM EVALUATION | MATERIAL: 4340 PER AMS 6415 | DATE: 10/18/00 | SHEET: 1 OF 1 | SCALE: NOT TO SCALE | | CHECKED: FRANK ZUECH |

**Northwest Machining and Mfg., Inc.**
1957 LANARK STREET • MERIDIAN, IDAHO 83642
PHONE (208) 888-5334 • FAX (208) 888-0917
e-mail nwmm@micron.net

ISO 9002 Registered
GSA-PES SIN 871-3

Date: 03/28/01

Job Order Number: 1455

Customer: GENERAL ATOMICS

Part Number: S2B REV: B

Description: COUPON

Quantity: 4

Purchase Order Number: H030105

Customer Supplied Material? NO

CERTIFICATION OF CONFORMANCE

NORTHWEST MACHINING & MFG., INC., DOES HEREBY CERTIFY THAT PARTS MANUFACTURED UNDER THE ABOVE NOTED PURCHASE ORDER WERE PRODUCED AS STIPULATED BY THAT PURCHASE ORDER.

IT IS FURTHER CERTIFIED THAT TEST REPORTS VERIFYING COMPLIANCE WITH DESIGN STANDARDS, MATERIAL CONTROLS, & INSPECTION REQUIREMENTS NOTED ON THE PURCHASE ORDER, ARE ON FILE AND AVAILABLE UPON REQUEST.

SIGNED: Sid Harmon
SID HARMON / (QCM)

# INSPECTION REPORT

ERIAL: 4340
SPEC: AMS-6415
/CERT: EMS # T145494 *
ET 1 OF 1
* LOT # 8079450

.X +/- .1
.XX +/- .05
.XXX +/-
ANGLE +/- .5°

CUSTOMER: GENERAL ATOMICS
P/O #: H030105
DRWG #: 52B
PART NAME: COUPON
DCN:

JOB #: 14555
S/O #:
REV #: 15
QTY: 6
ADCN:

| M O. | CHARACTERISTIC OR DIMENSIONAL NOTATION | FIRST PART | BY | DATE | INPROCESS INSP. | BY | DIMENSION OF RESPECTIVE PARTS Hi | Lo | | | | | BY | DATE |
|---|---|---|---|---|---|---|---|---|---|---|---|---|---|---|
| | 1.50 | 1.502 | NW 2 | DEC 2000 | | | 1.503 | 1.502 | | | | | NW 2 | DEC 01 2000 |
| | .375-.400 | .387 .388 | NW 2 | | | | .389 | .385 | | | | | NW 2 | |
| | 3.000 | 2.999 | NW 1 | DEC 01 2000 | | | 3.000 | 2.999 | | | | | NW 2 | DEC 01 2000 |
| | | | | | | | 02 | 04 | 06 | | | | | |
| | 64-125 FINISH BEFORE HT.TR | | | | | | A-112 B-114 | A-106 B-112 | A-110 B-112 | | | | | |
| | 64-125 FINISH AFTER HT.TR | | | | | | A-110 B-112 | A-96 B-100 | A- B- | | | | | |
| | RC TEST BEFORE HT.TR | | | | | | RC21 | RC21 | RC21.5 | | | | | |
| | RC TEST AFTER HT.TR. | | | | | | AC52 | AC52 | | | | | | |
| 4 | MAG. INSP. PER ASTM E 1444 | DIAMOND H TESTING # | | | | 1177 | NW 7 DEC 02 2000 | | Diamond H Testing After Heat | | | # 1243 (4) | NW 3 | MAR 27 2001 |
| 3 | HT.TR. 260-280 KSI PER MIL-H-6875 | Pacific Metallurgical # | | | | 27606F(4) | NW 3 MAR 22 2001 | | | | | | | |

QTY INSPECTED 4 BY NW 3 ACCEPTED 4 REJ 0

925 5th Ave. S., P.O. Box 368
Kent, Washington 98035
Phone: 854-4241 Fax: 854-4475

TI

NO. 276067

NORTHWEST MACHINING & MFG INC
1957 Lanark Street

Meridian, Id 83642

| DATE REC'D: | DATE SHIPPED: | INVOICE DATE: |
|---|---|---|
| 03/14/01 | 3-20-01 | |

SPECIFICATION: MIL-H-6875H

| MATERIAL: | TENSILE KSI: | ROCKWELL REQUIRED: |
|---|---|---|
| 4340 | 260-280 | 51-53 |

| CUST. P.O.: | WEIGHT: | LAB REQUIRED: |
|---|---|---|
| 15216 | 47.75#T | ********DECARB******** |

| HOW RECD: | HOW SHIP: | NO. PIECES: | PART NO. & NAME: |
|---|---|---|---|
| UPS | OVERNITE | 14 | S1B JOB ~~14555-GA~~ 14553-GA |
| | | 4 | S2B JOB ~~14553-GA~~ 14555-GA |

REMARKS:

PMI 23 3/23/01

corrected certification

Received Above Material Subject to Terms and Conditions on Reverse Side

VBS Red
AUTHORIZED SIGNATURE

- ☐ LAB TEST PERFORMED BY CUSTOMER
- ☐ PASSIVATED BEFORE H.T. PER BAC 5625 & 5619
- ☐ CLEANED AFTER H.T.
- ☐ COPPER PLATE PER BAC 5722 & MIL-C-14550
- ☐ STRIP COPPER & OIL PER BAC 5771
- ☐ D - 2 TEST RESULTS 19K _____ PA
- ☐ PROCESSED PER BAC 5619 EXCEPT NO CLEANING AFTER HEAT TREAT
- ☐ BAKED AFTER STRIP @ _____ °F FOR _____ HRS
- ☐ PROCESSED IN VACUUM FOR OXIDE CONTROL
- ☒ OIL ED
- ☐ RAW STOCK NO PASSIVATE REQ

**CERTIFICATION**

WE HEREBY CERTIFY THAT ALL HEAT TREATMENT GIVEN THE ABOVE MATERIAL AND ALL HARDNESS TESTING WAS DONE BY APPROVED METHODS AND INDUSTRY STANDARDS, PROPRIETORY AND GOVERNMENT SPECIFICATIONS (WHEN APPLICABLE) WERE FOLLOWED AND RECORDS OF SUCH HEAT TREATMENT IS ON FILE AND TRACEABLE BY DOCUMENTS. COPIES OF LAB TEST REPORTS AND FURNACE REPORTS ARE AVAILABLE AT NORMAL FEES IF REQUIRED:

PMI 28

QUALITY CONTROL APPROVAL

3/20/01
DATE

HARDNESS TEST BY: Vgordon
NO. OF PIECES: 2
RESULTS: 52.5-53 HRC
DATE: 3-20-01
LAB NO.: 47227

S2B-02
S2B-04

MAR 23 2001
NW 3

FINAL TEMPER: 425F

FILE COPY

PACIFIC METALLURGICAL 253 854 4475; 03/23/01 1:14PM; ;#011; Page 2/2

METALTEST, INC.
1285 5th Avenue South
Kent, Washington 98032
Phone (253) 813-5970 Fax (253) 813-5971
(800) 288-1376

| | | | |
|---|---|---|---|
| Pacific Metallurgical, Inc. | LAB | 47227 | 03/20/2001 |
| PO Box 399 | PO# | 12854 | |
| Kent | MATL | 4340 Cond. 260-280 KSI | |
| WA 98035 | SPEC | MIL-H-6875H | |
| Kevin Billington | SIZE | | |

** Corrected Certification 3/26/01 ** - Corrected Part Number information per revised PO.

Cust : Northwest Machining & Mfg. Inc.

| Cert# | Cust PO# | Part Number |
|---|---|---|
| 276067 | 15216 | S1B JOB# 14553-6A |
| | | S2B JOB# 14555-6A |

Microhardness Survey

| Distance From Surface (In.) | Knoop 500gr |
|---|---|
| .003 | 565 |
| .005 | 572 |
| .010 | 581 |
| Core | 581 |

| | |
|---|---|
| Decarburization: | Satisfactory |
| Carburization/Nitriding: | Satisfactory |
| IGA (@ 500X): | (.0002" |

Conforms to Spec. XX

Does Not Conform to Spec.

Respectfully,

Blaine Maki
General Manager

NW 3

MAR 27

# Diamond H Testing Laboratories

## Certified Inspection Report

QSD 250

Report No. 1243

| | | | |
|---|---|---|---|
| Customer Northwest Machining & Mfg. | Date 3/26/2001 | DHT Job No. 01-3023-32 | DHT Proc No. PT1110, MT1210 |
| Project Description MT 18 plates | P.O. No. 15282 | Cust. Job. No. 14553-GA, 14555-GA | |
| Job Location DHT Lab | Inspection Std ASTM 1444, FWDC, Flourescent or | | |
| Surface Cond. As machined | Acceptance Standard No Defects Allowed | Percent Inspected 100% | |
| Heat Treat: Before After | Material Type 4340 steel per AMS-6415 | | |
| Type of Inspection: MT x PT ___ | Type of Work: New x Repair ___ In service ___ | Temp of Material Ambient | |

| | | | | | | | |
|---|---|---|---|---|---|---|---|
| MT Equipment Magna Flux | Dry ___ Wet X | Visible ___ Fluorescent X | AC ___ DC X | Prod Spacing N/A Coil X | Mag Particle color PP | | |
| Penetrant material ___ | Water washable ___ Visible PT | Solvent ___ Fluorescent | Dwell time ___ | Develop Time ___ | Dry ___ Wet | | |

DEFECT CODE IP - Incomplete penetration IF - Incomplete fusion UC - Undercut C - Crack P - Porosity S - Slag

| Piece No., Part No. | Material | Accept | Reject | Defect code | Comments |
|---|---|---|---|---|---|
| S2B-02 (168-01) | 4340 | X | | | |
| S2B-03 (168-02) | 4340 | X | | | |
| S2B-04 (168-03) | 4340 | X | | | |
| S2B-05 (168-04) | 4340 | X | | | |
| S1B-01 (168-05) | 4340 | X | | | |
| S1B-02 (168-06) | 4340 | X | | | |
| S1B-03 (168-07) | 4340 | X | | | |
| S1B-04 (168-08) | 4340 | X | | | |
| S1B-05 (168-09) | 4340 | X | | | |
| S1B-06 (168-10) | 4340 | X | | | |
| S1B-07 (168-11) | 4340 | X | | | |
| S1B-08 (168-12) | 4340 | X | | | |
| S1B-09 (168-13) | 4340 | X | | | |
| S1B-10 (168-14) | 4340 | X | | | |
| S1B-11 (168-15) | 4340 | X | | | |
| S1B-12 (168-16) | 4340 | X | | | |
| S1B-13 (168-17) | 4340 | X | | | |
| S1B-14 (168-18) | 4340 | X | | | |

MAR 27 2001

NW 3

The recorded results are the opinion of the technician to the best of his knowledge based on the information provided to him by the customer at the time of the inspection.

Customer Dave Berthier

Technician Michael Hutchins Level II

Assistant Technician Level

**Northwest Machining and Mfg., Inc.**
1957 LANARK STREET • MERIDIAN, IDAHO 83642
PHONE (208) 888-5334 • FAX (208) 888-0917
e-mail nwmm@micron.net

Date: 12/02/00

Job Order Number: 14555

Customer: GENERAL ATOMICS

Part Number: S2B REV: ~~A~~ B DEC 02 2000

Description: COUPON

Quantity: 6

Purchase Order Number: H030105

Customer Supplied Material? NO

CERTIFICATION OF CONFORMANCE

NORTHWEST MACHINING & MFG., INC., DOES HEREBY CERTIFY THAT PARTS MANUFACTURED UNDER THE ABOVE NOTED PURCHASE ORDER WERE PRODUCED AS STIPULATED BY THAT PURCHASE ORDER.

IT IS FURTHER CERTIFIED THAT TEST REPORTS VERIFYING COMPLIANCE WITH DESIGN STANDARDS, MATERIAL CONTROLS, & INSPECTION REQUIREMENTS NOTED ON THE PURCHASE ORDER, ARE ON FILE AND AVAILABLE UPON REQUEST.

SIGNED:

SID HARMON / (QCM)

# INSPECTION REPORT

ATERIAL: 4340 .X +/- .1
SPEC: AMS-6415 .XX +/- .05
.O/CERT: EMS # T145494 * .XXX +/-
HEET 1 OF 1 ANGLE +/- .5°
* LOT # B079450

CUSTOMER: GENERAL ATOMICS JOB #: 14555
P/O #: H030105 S/O #:
DRWG #: 52B REV #: B
PART NAME: COUPON QTY: 6
DCN: ADCN:

| DIM NO. | CHARACTERISTIC OR DIMENSIONAL NOTATION | FIRST PART | BY | DATE | INPROCESS INSP. | BY | DIMENSION OF RESPECTIVE PARTS Hi / Lo | | | | | | BY | DATE |
|---|---|---|---|---|---|---|---|---|---|---|---|---|---|---|
| 1 | 1.50 | 1.502 | NW 2 | | | | 1.503 | 1.502 | | | | | NW 2 | DEC 01 2000 |
| 2 | .375-.400 | .387 .388 | NW 2 | | | | .389 | .385 | | | | | NW 2 | |
| 3 | 3.000 | 2.999 | NW 2 | DEC 01 | | | 3.000 | 2.999 | | | | | NW 2 | DEC 01 2000 |
| | | | | | | | 02 | 04 | 06 | | | | | |
| 4 | 64-125 FINISH BEFORE HT.TR | | | | | | A-112 B-114 | A-106 B-112 | A-110 B-112 | | | | | |
| 5 | 64-125 FINISH AFTER HT.TR | | | | | | A- B- | A- B- | A- B- | | | | | |
| 6 | RC TEST BEFORE HT.TR | | | | | | RC21 | RC21 | RC21.5 | | | | | |
| 7 | RC TEST AFTER HT.TR. | | | | | | | | | | | | | |
| A | MAG. INSP. PER ASTM E 1444 | | | | | | | | | | | | | |
| B | HT.TR. 260-280 KSI PER MIL-H-6875 | | | | | | | | | | | | | |

QTY INSPECTED _____ BY _____ ACCEPTED _____ REJ _____

# Diamond H Testing Laboratories

3640 U.S. Highway 30, Pocatello, Idaho 83201
Phone 208/232-2663 Fax 208/232-2772

Report No. 1177

## Certified Inspection Report
QSD 250

| | | |
|---|---|---|
| Customer NorthWest Machine | Date 12-2-00 | DHT Job No. 00-0601-12 |
| Project Description | P.O. No 14731 | Customer Job. No. |
| Job Location DHT Boise | Percent Inspected 100% | DHT Procedure No. 1200 |
| Surface Condition AS welded | Type of Material Steel 4340 | Temperature of Material Ambient |
| Heat Treat Before After | Acceptance Standard ASTM E1444 | Inspection Standard Ambient |
| Type of inspection (MT) PT | Type of Work (New) Repair | |

| | | | | | |
|---|---|---|---|---|---|
| MT | MT Equipment STATIONARY | Dry ___ Wet X | Visible ___ Fluorescent X | AC X DC ___ | Prod Spacing ___ Coil X | Mag Particle color florescent |
| PT | Penetrant material | Water washable ___ Visible PT ___ | Solvent ___ Fluorescent ___ | Dwell time | Develop Time | Dry ___ Wet ___ |

DEFECT CODE IP - Incomplete penetration IF - Incomplete fusion UC - Undercut C - Crack P - Porosity S - Slag

| Serial No., Piece No., Part No. | Accept | Reject | Defect code | Comments |
|---|---|---|---|---|
| JN 14552 S1A-01 thru 22 | / | | | 22 pieces |
| JN 14553 S1B-01 thru 16 | / | | | 16 pieces |
| JN 14554 S2A-01 thru 12 | / | | | 12 pieces |
| JN 14555 S2B-01 thru 06 | / | | | 6 pieces |

NW 7 DEC 02 2000

The recorded results are the opinion of the technician to the best of his knowledge based on the information provided to him by the customer at the time of the inspection.

| | | |
|---|---|---|
| Customer [signature] | Technician Michael [signature] | Level II |
| | Assistant Technician Brian Contreras | Level |

YOUR EMJ BRANCH LOCATION:

**Earle M. Jorgensen Company**
6650 NORTH ENSIGN STREET
PORTLAND,OR 97217

# Invoice

## OUR INFORMATION

| | |
|---|---|
| INVOICE NUMBER | T145494271 |
| CUSTOMER NUMBER | 70016 |
| DATE | 10-NOV-00 |
| SHIPPED ON DOCUMENT NUMBER | T145494271 |

SOLD TO:

NORTHWEST MACHINING & MFG.

1957 LANARK STREET
MERIDIAN,ID 83642

## YOUR INFORMATION

| | |
|---|---|
| ORDERED BY | VIVIAN |
| DATE ORDERED | 09-NOV-00 |
| PO # | 14629 |

## YOUR ORDER

| ITEM DESCRIPTION | QTY. DESC. | SHIPPED | X UNIT PRICE | = EXT. PRICE |
|---|---|---|---|---|
| E4340 CD N & T AQ BAR MIL S 5000 C<br>1/2 X 2-1/2 FLAT X 12' R/L<br>Part # JOB # 14554 & 14555 | 1 Bar | 51.04<br>LB | 4.97<br>LB | 253.71 |

14554 14555 ~~Del~~ G.A

RECEIVED
NOV 17 2000

Thank You.
Remember EMJ, accepts VISA, MasterCard and American Express at point of sale.

Check out e-metals, EMJ's new customer information and order processing system at www.emjmetals.com.

For further information about your order, please contact your materials specialist:

LARRY
AT 503 2832251
EMJ - PORTLAND
SERVICE CENTER

We hereby certify that the goods and services covered by this invoice were produced in compliance with the fair labor standards act, as amended, and the regulations thereunder. Terms and conditions: The complete terms and conditions of sale are stated on the reverse side of this invoice. Aluminum Product Net 30 Days. Black Pipe Products 2%10 Days Net 30. Unit price is displayed in two decimal places but priced by four.

| | | |
|---|---|---|
| TOTAL MATERIALS AND SERVICES | $ | 253.71 |
| SALES TAX | $ | |
| INVOICE TOTAL | $ | 253.71 |

## SHIPPING INFORMATION

| | |
|---|---|
| SHIPPING DATE | 09-NOV-00 |
| FREIGHT PAYMENT | PREPAID |
| FOB | D |
| SHIPPED VIA | VIKING |

SHIPPING ADDRESS:
N.W. MACHINING & MANUFACTURING

1957 LANARK STREET
MERIDIAN,ID 83642


Form: FOONYY

---

TEAR OFF THIS SLIP AND RETURN WITH CHECK PAYABLE TO:
Earle M. Jorgensen Company
DEPT 0934
LOS ANGELES,CA 900840934
(REMITTANCE ADDRESS ONLY)

| | | |
|---|---|---|
| INVOICE NUMBER | | T145494271 |
| INVOICE TOTAL | $ | 253.71 |

## PAYMENT TERMS

1/2% 10 DAYS NET 30
Except Aluminum - ALUMINUM Net 30

# CERTIFICATE OF TEST



Certification Date
13-NOV-2000

**CUSTOMER ORDER NUMBER**
14629

**CUSTOMER PART NUMBER**

6650 NORTH ENSIGN STREET
PORTLAND OR 97217

Invoice Number
T145494

Ship# T649517

**SOLD TO:** NORTHWEST MACHINING & MFG.
1957 LANARK STREET
MERIDIAN ID 83642

**SHIP TO:** N.W. MACHINING & MANUFACTURING
1957 LANARK STREET
MERIDIAN ID 83642

Description: E4340 CD N & T AQ BAR MIL S 5000 CND E4
1/2 X 2-1/2 FLAT X 12' R/L Line Total: 51.048 LB
HEAT: 8079450 ITEM: 508601

Specifications:
MIL S 5000 E AMS 2301 AMS 6415 M

## CHEMICAL ANALYSIS

| C | MN | P | S | SI | CU | NI | CR |
|---|---|---|---|---|---|---|---|
| 0.41 | 0.75 | 0.01 | 0.022 | 0.2 | 0.21 | 1.66 | 0.79 |

| MO | AL |
|---|---|
| 0.25 | 0.018 |

RCPT: R157189
MILL : REPUBLIC ENGINEERED STEELS,INC COUNTRY OF ORIGIN : USA

## MECHANICAL PROPERTIES

| DESCRIPTION | YLD STR | ULT TEN | %ELONG IN 00 IN | %RED IN AREA | HARDNESS BHN |
|---|---|---|---|---|---|
| | | | | | 228 |

NOV 16 2000
NW 3

The above data were transcribed from the manufacturer's Certificate of Test after verification for completeness and specification requirements of the information on the certificate. All test results remain on file subject to examination.

We hereby certify that the material covered by this report will meet the applicable requirements described herein, including any specification forming a part of the description.

The willful recording of false, fictitious, or fraudulent statements in connection with test results may be punishable as a felony under federal statutes.

Material did not come in contact with mercury while in our possession.

LINDY FARR

MANAGER, QUALITY ASSURANCE

# CERTIFICATE OF TEST



Certification Date
13-NOV-2000

**CUSTOMER ORDER NUMBER**
14629

**CUSTOMER PART NUMBER**

6650 NORTH ENSIGN STREET
PORTLAND OR 97217

Invoice Number
T145494

Ship# T649517

**SOLD TO:** NORTHWEST MACHINING & MFG.
1957 LANARK STREET
MERIDIAN ID 83642

**SHIP TO:** N.W. MACHINING & MANUFACTURING
1957 LANARK STREET
MERIDIAN ID 83642

Description: E4340 CD N & T AQ BAR MIL S 5000 CND E4
1/2 X 2-1/2 FLAT X 12' R/L Line Total: 51.048 LB
HEAT: 8079450 ITEM: 508601
END-QUENCH HARDENABILITY (JOMINY - RC) IN
6 20 32
57 5 48

---

GRAIN SIZE :7 -

---

INGOT CAST MATERIAL IS FREE FROM MERCURY CONTAMINATION
DECARB: OK
MACRO: OK
AMS NO :2301
SEVERITY :0.0
FREQUENCY:0.0

---

COMMENTS
HOT MILL: REPUBLIC
FINE GRAIN
DECARB .012"

NOV 16 2000
NW 3

The above data were transcribed from the manufacturer's Certificate of Test after verification for completeness and specification requirements of the information on the certificate. All test results remain on file subject to examination.

We hereby certify that the material covered by this report will meet the applicable requirements described herein, including any specification forming a part of the description.

The willful recording of false, fictitious, or fraudulent statements in connection with test results may be punishable as a felony under federal statutes.

Material did not come in contact with mercury while in our possession.

LINDY FARR

Lindy Farr

MANAGER, QUALITY ASSURANCE

Earle M. Jorgensen Company

FROM: E.M.J. - LOS ANGELES
10650 S ALAMEDA ST.
* DUPLI
LYNWOOD

**S.I.D. ORDER NO.** T145494
ORDERED BY: 00271
* PHONE: VIVIAN
CUST. ORD. NO.: 208 888-5334
14629
PAGE 1 OF 1

SOLD TO

SHIP TO N.W. MACHINING & MANUFACTURING
1957 LANARK STREET
MERIDIAN ID 83642
000

00271 T145494 CT
XFER # 00459 T649517

| DATE ORD. | CUSTOMER P.O. | | F.O.B. | DEL AREA | VIA | | CUST. ACCT. | PROM. DATE |
|---|---|---|---|---|---|---|---|---|
| 09-NOV-00 | 14629 | | D | 0 | VIKNG | | 70016 | 13-NOV-00 |
| **ORDER WGT.** | **I/S** 106 | **TERR.** | **TYPE** | **TAX RATE** | **PPD/COLL** | **C.O.D.** | **TEST REPORT** | **SHIP DATE** |
| 51.05 | 106 | | CT | | P | 4 | Y PRO#: Y | 09-NOV-00 |

*** To be DIRECT SHIPPED from Branch 00459

---

508601 E4340 CD N & T AQ BAR MIL S 5000 CND E4
1 Bar 1/2 X 2-1/2 FLAT X 12' R/L 51.0480 LB
YEL W/FT 4.2540 EXT WGT: 51
PART# JOB# PO LN
Fills TRANSFER From Invoice # T145494/Line # 1
HEAT # 8079450 LOCATION:5-02-15-06 Y
1 BAR 1
5B

NOV 16 2000
NW 3

RECEIVED ABOVE GOODS ON TERMS AND CONDITIONS APPEARING ON BACK OF INVOICE X

| INVOICE AMT. | ADDITIONAL CHARGES | V.A.T. T.'X | TAX/AMT. | TOTAL |
|---|---|---|---|---|
| | | | | |

| NO. OF PKGS. | PKG. TYPE | NO. OF PKGS | PKG. TYPE | TOTAL PCS. | DESCRIPTION OF ARTICLES | SHIP WGT. | CLS |
|---|---|---|---|---|---|---|---|
| 1 | Ttl | | | 1 | IRN/STL BAR 104 | 51 | 050 |
| | | | | | | | |
| | | | | | | | |
| | | | | | | | |
| | | | | | | | |
| PACKING SLIP | | | | 1 | TOTAL | 51 | |

FREIGHT CHARGES ARE TO BE PRE-PAID UNLESS THIS BLOCK IS CHECKED. ☐
Subject to Section 7 of conditions, if this shipment is to be delivered to the consignee without recourse on the consignor, the consignor shall sign the following statement. The carrier shall not make delivery of this shipment without payment of freight and all other lawful charges.
(Signature of Consignor)

CARRIER SEND FREIGHT BILL TO:
EMJ - PORTLAND
6650 NORTH ENSIGN STREET
PORTLAND OR 97217
SHIPPER PER X

C.O.D. AMOUNT

C.O.D. FEE TO BE PAID BY
SHIPPER ☐ CONSIGNEE ☐

CARRIER AGENT
PER:

☐ SEE BACK OF MEMO COPY

DATE 00/11/13 11/15

2852184

FOR QUESTIONS CALL CUSTOMER SERVICE (800) 845-4647

00/11/14

viking freight

P.O. BOX 649001
SAN JOSE, CA 95164-9001
1-800-VIKINGS (1-800-845-4647)
www.vikingfreight.com
CAL T84,649 (VIKN)

*A FedEx Company*

FREIGHT BILL PRO# 796287035

SHIPPER
EARLE M JORGENSEN CO L
10650 ALAMEDA ST
LYNWOOD CA 902621

PRO # 796287035
ROUTING PAGE 1 OF 1
WHT/BSE-24B
13263/999999

CONSIGNEE
NW MACHINING AND MFG
1957 LANARK ST
MERIDIAN ID 83642

BILL: PRT650NNPR
REF. #
SH# T145494
PO# 14629N

CONSIGNEE COPY
IL

| UNITS | HM | DESCRIPTION | WEIGHT IN LBS | RATE | CHARGES | |
|---|---|---|---|---|---|---|
| 1 | | IRN/STL BAR | 51 | | | CODE |
| | | MINIMUM SHIPMENT | | | | DATE |
| | | FUEL SURCHARGE | | | | EMP# |
| | | FUEL SURCHARGE IS 4.00% | | | | |
| 1 | | | 51 | | | |

11/15

Responsiveness. It means Viking.

| PCS | DATE | TIME | DRVR# | RECEIVED IN GOOD ORDER EXCEPT AS NOTED | | SURCHARGE | | AMT. COLLECTED |
|---|---|---|---|---|---|---|---|---|
| 1 | 11-15 | 1115 | 1670 | PRINT RECEIVER'S LAST NAME | RECEIVING CO-NAME | AMT. DUE | PREPAID | |

TRANSPORTATION PROVIDED PER THE TERMS AND CONDITIONS OF THE BILL OF LADING, AND THE GOVERNING NATIONAL MOTOR FREIGHT CLASSIFICATION, AND CARRIER'S TARIFF. LIABILITY LIMITATIONS MAY APPLY.

**A2A COUPON**

## COUPON

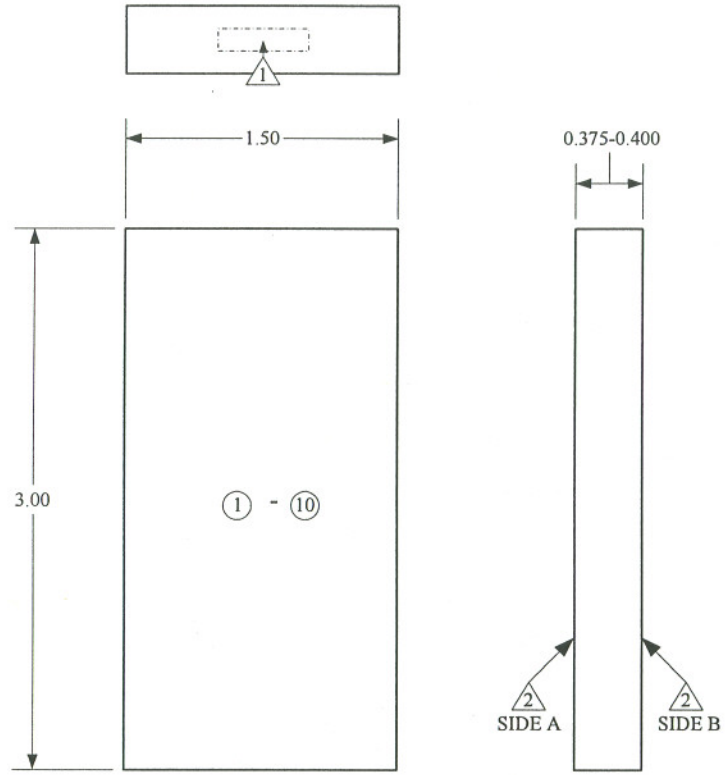


## NOTES

1. SERIALIZE THE COUPONS A2A-01 TO A2A-12 AT NOTED LOCATION USING 0.25 IMPRESSION STAMP, 0.004-0.008 DEEP
2. $0.025\sqrt{\frac{125}{64}}$ M
3. BREAK ALL SHARP EDGES 0.005-0.015
4. FLUORESCENT PENETRANT INSPECT PER ASTM E1417
5. FOR COUPONS WITH EVEN SERIAL NUMBERS: PERFORM CONDUCTIVITY TESTS PER MIL-STD-1537
6. FOR COUPONS WITH EVEN SERIAL NUMBERS: PERFORM SURFACE ROUGHNESS MEASUREMENT PER ASME B46.1

(1) – (10) MARK SIDE A WITH DATA MATRIX™ SYMBOLS

| ALGLE PROGRAM | TITLE | DRAWING NUMBER | REVISION | DIMENSIONS | TOLERANCES | DRAWN |
|---|---|---|---|---|---|---|
| DPM EVALUATION | COUPON | A2A | B | ALL DIMENSIONS IN INCHES | UNLESS OTHERWISE NOTED<br>X.X = ± 0.1<br>X.XX = ± 0.05<br>ANGLES = ± 0.5° | JOHN COATES |
| | MATERIAL 7075-T7351 PER AMS 4078 (0.5 INCH PLATE) | DATE 10/18/00 | SHEET 1 OF 1 | SCALE NOT TO SCALE | | CHECKED FRANK ZUECH |

**Northwest Machining and Mfg., Inc.**
1957 LANARK STREET • MERIDIAN, IDAHO 83642
PHONE (208) 888-5334 • FAX (208) 888-0917
e-mail nwmm@micron.net

Date: 12/02/00

Job Order Number: 14557

Customer: GENERAL ATOMICS

Part Number: A2A REV: ~~A~~ B

Description: COUPON DEC 02 2000

Quantity: 12

Purchase Order Number: H030105

Customer Supplied Material? NO

CERTIFICATION OF CONFORMANCE

NORTHWEST MACHINING & MFG., INC., DOES HEREBY CERTIFY THAT PARTS MANUFACTURED UNDER THE ABOVE NOTED PURCHASE ORDER WERE PRODUCED AS STIPULATED BY THAT PURCHASE ORDER.

IT IS FURTHER CERTIFIED THAT TEST REPORTS VERIFYING COMPLIANCE WITH DESIGN STANDARDS, MATERIAL CONTROLS, & INSPECTION REQUIREMENTS NOTED ON THE PURCHASE ORDER, ARE ON FILE AND AVAILABLE UPON REQUEST.

SIGNED: Sid Harmon

SID HARMON / (QCM)

# INSPECTION REPORT

NW 2

MATERIAL: 7075-T351
SPEC: AMS-4078
P.O/CERT: TMX # H03816
SHEET 1 OF 1
Lot # 667111

.X +/- .1
.XX +/- .050
.XXX +/-
ANGLE +/- .5°

CUSTOMER: General Atomics
P/O #: H03 0105
DRWG #: H2A
PART NAME: Coupon
DCN:

JOB #: 14557
S/O #:
REV #: A
QTY: 12
ADCN:

| DIM NO. | CHARACTERISTIC OR DIMENSIONAL NOTATION | FIRST PART | BY | DATE | INPROCESS INSP. | BY | DIMENSION OF RESPECTIVE PARTS HI | LO | | | | | BY | DATE |
|---|---|---|---|---|---|---|---|---|---|---|---|---|---|---|
| 1 | .375-.400 | .386-.387 | NW 3 | DEC 01 2000 | .386-.387 | NW 3 | .388 | .386 | | | | | NW 3 | DEC 01 2000 |
| 2 | 1.50 | 1.499 | NW 3 | NOV 28 2000 | 1.499-1.500 | NW 3 | 1.501 | 1.498 | | | | | | |
| 3 | 3.00 | 2.998 | NW 3 | NOV 28 2000 | 3.000 | NW 3 | 3.000 | 2.993 | | | | | NW 3 | DEC 01 2000 |
| | Serial #s | → | | | | | 02 | 04 | 06 | 08 | 10 | 12 | | |
| A | Verify Serialization | .235 x .005 .006 | NW 3 | DEC 01 2000 | | | .006 .235 | .005 | | | | | NW 3 | DEC 01 2000 |
| B. | Even #s - Conductivity | | | | | | 38.4-38.3 | 38.0-38.3 | 37.8-38.2 | 38.1-38.2 | 38.2 | 37.7-38.0 | | |
| C | Even #s - Finish ~~100~~ 64 - 125 per KLW | | | | | | A-108 B-110 | A-90 B-98 | A-96 B-92 | A-92 B-96 | A-92 B-98 | A-92 B-98 | | |
| D. | Penetrant Inspect per Astem E1417 | | | | | | | | | | | | | |

QTY INSPECTED 12 BY NW 3 ACCEPTED 12 REJ 0

# Diamond H Testing Laboratories

3640 U.S. Highway 30, Pocatello, Idaho 83201
Phone 208/232-2663 Fax 208/232-2772

Report No. 1176

## Certified Inspection Report
QSD 250

| | | |
|---|---|---|
| Customer: Northwest Machine | Date: 12-2-00 | DHT Job No.: 00-0601-12 |
| Project Description: | P.O No: 14731 | Customer Job. No.: |
| Job Location: DHT Boise | Percent Inspected: 100% | DHT Procedure No.: 1100 |
| Surface Condition: AS welded | Type of Material: Alum 7175-7351 | Temperature of Material: Ambient |
| Heat Treat: Before / After | Acceptance Standard: ASTM E1417 | Inspection Standard: |
| Type of inspection: MT (PT) | Type of Work: (New) / Repair | |

**MT** — MT Equipment: | Dry ___ Wet ___ | Visible ___ Fluorescent ___ | AC ___ DC ___ | Prod Spacing ___ Coil ___ | Mag Particle color:

**PT** — Penetrant material: Double chek | Water washable X / Visible PT ___ | Solvent ___ / Fluorescent X | Dwell time: 30 MIN | Develop Time: 15 MIN | Dry ___ Wet X

DEFECT CODE: IP - Incomplete penetration; IF - Incomplete fusion; UC - Undercut; C - Crack; P - Porosity; S - Slag

| Serial No . Piece No., Part No. | Accept | Reject | Defect code | Comments |
|---|---|---|---|---|
| JN 14556 A1A-01 Thru 22 | ✓ | | | 22 pieces |
| JN 14557 A2A-01 Thru 12 | ✓ | | | 12 pieces |

NDT DEC 02 2000

The recorded results are the opinion of the technician to the best of his knowledge based on the information provided to him by the customer at the time of the inspection.

| | | |
|---|---|---|
| Customer: [signature] | Technician: [signature] | Level II |
| | Assistant Technician: [signature] | Level |

REMIT TO:

TMX Division
PO Box 504213
The Lakes, NV 88905-4213

TMX DIVISION

# INVOICE

INVOICE NO: H03816

| ACCOUNT NO. | INVOICE DATE |
|---|---|
| 46673 | 11/13/00 |

SOLD TO

NORTHWEST MACHINING &
MFG INC
1957 LANARK STREET
MERIDIAN ID 83642

AMOUNT ENCLOSED _____

PLEASE DETACH AND RETURN THIS PORTION WITH YOUR REMITTANCE.

SHIP TO

46673
NORTHWEST MACHINING &
MFG INC
1957 LANARK STREET
MERIDIAN ID 83642

TMX DIVISION

SEND CORRESPONDENCE TO:

SUITE 225
1440 N HARBOR BLVD
FULLERTON CA 92635-4127
Tel: (503) 254-2600
Fax: (800) 926-8310

| ORDER DATE | PURCHASE ORDER | CARRIER | FREIGHT | INVOICE NO | INVOICE DATE |
|---|---|---|---|---|---|
| 11/09/00 | 14626 | 1Z0197550344049023 | PPD | H03816 | 11/13/00 |

| DESCRIPTION OF MATERIAL | BILLING QUANTITY | UNIT | PRICE | EXTENSION |
|---|---|---|---|---|
| 091300 1<br>7075-T7351 ALUMINUM PLATE<br>1/2 CUT<br>SAW 1.75" (+.063,-0) X 3.25" (+.063,-0)<br>Test Results Attn to: QA Department.<br>SHIP ALL MATERIAL FROM ONE HEAT LOT | 14.00 | PC | 3.3800 | 47.32 |

14557
G-Atomics

RECEIVED
NOV 17 2000

INVOICE WILL BE DATED THE DAY OF SHIPMENT. INTEREST WILL BE CHARGED ON PAST DUE ACCOUNTS AT THE RATE OF 1-1/2% PER MONTH.

PRICE SHOWN IS SUBJECT TO PRICE IN EFFECT AT THE TIME OF SHIPMENT.
WE HEREBY CERTIFY THAT THESE GOODS WERE PRODUCED IN COMPLIANCE WITH ALL APPLICABLE REQUIREMENTS OF SECTION 6,7, AND 12 OF THE FAIR LABOR STANDARDS ACT, AS AMENDED, AND OF REGULATIONS AND ORDERS OF THE UNITED STATES DEPARTMENT OF LABOR ISSUED UNDER SECTION 14 THEREOF.

TOTAL $ 47.32

REMIT BY: 12/08/00

TERMS: NET 30 DAYS

TMX IS A DIVISION OF THYSSEN INC., N.A.

One Call Gets It All
(800) 926-2600

SALESPERSON:
TERI A. POPMA
Ext. 235
Fax: (800) 926-8310

TMX DIVISION

12817 NE AIRPORT WAY
PORTLAND OR 97230

**ACKNOWLEDGMENT NO. 12-154126**

**11/09/2000 9:06 AM**



46673
TO: NORTHWEST MACHINING & **
MFG INC
1957 LANARK STREET
MERIDIAN, ID 83642

SHIP TO: NORTHWEST MACHINING &
MFG INC
1957 LANARK STREET
MERIDIAN, ID 83642

ATTENTION: VIVIAN UPTON, (208)888-5334

| ITEM | QUANTITY | DESCRIPTION | UNIT PRICE | TOTAL | DELIVERY DATE |
|---|---|---|---|---|---|
| | | **THANKS FOR THE ORDER VIVIAN - TERI.** | | | |
| 1 | 24.00<br>PC<br><br>39.24<br>LB | **7075-T7351 ALUMINUM PLATE**<br>**091300 - 1/2 CUT**<br>**SAW 4" (+.063,-0) X 8" (+.063,-0)**<br>Cust PO No: 14626.<br>Test Results Attn to: QA Department.<br>SHIP ALL MATERIAL FROM ONE HEAT LOT<br>FOB: ORIGINATION, UPS GROUND, PREPAID<br>QQ-A-250/12F, AMS 4078E, ASTM-B209-96<br>NON USI TESTED | 11.3200<br>PC | $271.68 | 11/21/2000 |
| 2 | 14.00<br>PC<br><br>4.13<br>LB | **7075-T7351 ALUMINUM PLATE**<br>**091300 - 1/2 CUT**<br>**SAW 1.75" (+.063,-0) X 3.25" (+.063,-0)**<br>Cust PO No: 14626.<br>Test Results Attn to: QA Department.<br>SHIP ALL MATERIAL FROM ONE HEAT LOT<br>FOB: ORIGINATION, UPS GROUND, PREPAID<br>QQ-A-250/12F, AMS 4078E, ASTM-B209-96<br>NON USI TESTED | 3.3800<br>PC | $47.32 | 11/21/2000 |
| | | ORDER TOTAL | | $319.00 | |

PRICES ARE QUOTED AS PRICE IN EFFECT AT TIME OF SHIPMENT.

TERMS : NET 30

PLEASE REVIEW THE ABOVE ITEMS FOR ACCURACY

BERYLLIUM & TELLURIUM COPPER, NEW CARBON STEEL BARS, MAXX STAINLESS STEEL, BRONZE, NICKEL, BEARING BRONZE
TITANIUM, AMPCO METAL, MAGNESIUM, OFE COPPER, RWMA ALLOYS, OFHC COPPER, ALUMINUM, GLASS SEALING ALLOYS
PRECISION SAWING, SLITTING, LEVELING, SHEARING, RE-ROLLING, ANNEALING, EDGE CONDITIONING, TRAVERSE WINDING

TMX IS A DIVISION OF THYSSEN INC., N.A.

| CUSTOMER | SHIP DATE | GROSS WEIGHT |
|---|---|---|
| 46673 | 11/13/00 SHP | 5 |

BILL TO: NORTHWEST MACHINING &

WORK ORDER: ** H03816

SHIP TO

NORTHWEST MACHINING & 01
MFG INC
1957 LANARK STREET
MERIDIAN ID 83642

| CUSTOMER P.O. NUMBER | TERRITORY | ENTRY ID |
|---|---|---|
| 14626 | 04 | 12TAP |

| BUYER | INSIDE SALES |
|---|---|
| VIVIAN UPTON | 12TAP TERI A. POPMA |

| BUYER TELEPHONE | INSIDE SALES TELEPHONE |
|---|---|
| (208) 888-5334 | (503) 254-2600 235 |

| SHIP VIA | SHIPPING STATUS | | |
|---|---|---|---|
| INTERNAL | COMPLETE | PARTIAL | CANCEL |
| | X | | |

| TO CUSTOMER | FOB |
|---|---|
| UPS/1Z0197550344049023 | ORIG |
| BILL OF LADING | FREIGHT STATUS |
| | PPD |

PART DESCRIPTION 091300-4

**7075-T7351 ALUMINUM PLATE**
**1/2 CUT**
SAW 1.75" (+.063,-0) X 3.25" (+.063,-0)
Test Results Attn to: QA Department.
SHIP ALL MATERIAL FROM ONE HEAT LOT

Avail 523
Rack Location: Product Code: 0103

| QUOTE | OF 2 | PACKING LIST |
|---|---|---|
| 12-154126-2 | TEST RESULTS | |

| ORDER DATE | DELIVERY DATE | SHIP BRANCH | SELL BRANCH | WORK ORDER |
|---|---|---|---|---|
| 11/09/00 ORD | 11/21/00 DEL | 17-WAL | 12-PDX | H03816 |

THYSSEN
TMX DIVISION

TMX

5 STERLING DRIVE
WALLINGFORD CT 06492-1843

CUSTOMER SIGNATURE: DATE:

| QUANTITY | ORDERED | SHIPPED |
|---|---|---|
| INVENTORY | 4.13 LB | 4.00 |
| BILLING | 14.00 PC | 14.00 |
| WAREHOUSE | 14.00 PC | |

PACKED WITH OTHER GOODS

FINISHED GOODS LOCATION

| FULL | SCRAP | FILLED BY | PACKED BY | Q/A AUDIT |
|---|---|---|---|---|
| | | JAR | | |

CUSTOMER RECEIVING HOURS | MAXIMUM SKID WEIGHT

LOADING INSTRUCTIONS | MAXIMUM BUNDLE WEIGHT

| BOXES | BARS | CASES | CUSHP | PKGS | SKIDS | BDLS | TUBES | CTNS | FLAT | COILS |
|---|---|---|---|---|---|---|---|---|---|---|
| | | | | 1 | | | | | | |

SPECIAL INSTRUCTIONS

ONLY SHIP DOMESTIC MATERIAL. CUSTOMER WILL REFUSE FOREIGN MATERIAL.

INSPECTION RECORD

**TEST RESULTS** -----
CERTIFICATE OF COMPLIANCE
We hereby certify that mercury or any of its compounds are not used in the processing and distribution of our products. We hereby certify that the material above complies with the following specifications:
QQ-A-250/12F AMS 4078E ASTM-B209-96
NON USI TESTED

| TAG NUMBER | QUANTITY | UNIT | VENDOR | VENDOR PO | HEAT/LOT |
|---|---|---|---|---|---|
| H72761 | 4.00 | LB | ALCOA INC | 0831105 | 667111 |

NW 3
NOV 21 2000

LAWRENCE D. BUHL - General Manager: WALLINGFORD PRINTED 11/09/00 02:19 PM CONTROL NO 00166

TMX IS A DIVISION OF THYSSEN INC., N.A.

CERTIFIED INSPECTION REPORT **Alcoa Inc.** PITTSBURGH, PA DAVENPORT WORKS

We hereby certify that the material covered by this certificate has been inspected with, and has been found to meet, the applicable requirements described herein, including any specifications forming a part of the description and that samples representative of the material met the composition limits and had the mechanical properties shown on the face of this sheet.
Per:

Ronald G. Machetta
Vice President Alcoa Mill Products

Michael J. Skoglund
Quality Assurance Manager

Ship From: DAVENPORT, IA.

| Ship Date | B.L. No. | Invoice No. | Alcoa No. | Item |
|---|---|---|---|---|
| 7713 | 127056 | | | |
| 1999-05-08 | 44914 | 27890 | DS-15237-1 | |

Page 1

| P.O. No./Govt Contract No. | Customer |
|---|---|
| 831105 | C&B-WALLINGFORD |

Ship To: COPPER & BRASS SALES INC
WALLINGFORD BRANCH
34 BARNES INDUSTRIAL RD
WALLINGFORD, CT 06492

Item Description
.500 IN TK X 48.500 IN W X 144.500 IN LN (N) A/T 7075-T7351
RECTANGULAR MILL FINISH, SAWED (PART 091300-4). PER
AMS-QQ-A-250/12 & EXCEPT MARKING AMS4078 REV E & EXCEPT MARKING
ASTMB209 REV 96 ((MARKED)) INTERLEAVED SKID WGT: 4000 LB
QUAN TOL +/-30 % CQR 0100460 REV 01
CUST REQ 99-05-02 *** W/E 99-05-08 ***

| Num | Package Ticket | Lot | Weight | Quantity | UOM | Pc Id/Serl |
|---|---|---|---|---|---|---|
| 1 | 240065 | 667111 | 2506 | 7 | PC | |
| 2 | 240065 | 667112 | 1789 | 5 | PC | |
| 3 | 240072 | 667111 | 703 | 2 | PC | |
| | | | 4998 | 14 | | |

Notes for CQR: 0100460.01
PRODUCT PRODUCED AND MARKED TO THE REQUIREMENTS OF AMS-QQ-A-250/12 ALSO MEETS THE REQUIREMENTS OF QQ-A-250/12F. PRODUCT PRODUCED AND MARKED TO THE REQUIRE- MENTS OF QQ-A-250/12F ALSO MEETS THE REQUIREMENTS OF AMS-QQ-A-250/12.

CQR: 0100460.1 -Specification Limits ----------

| Tmpr | Dir | | UTS KSI | TYS KSI | EL4D PCT |
|---|---|---|---|---|---|
| T7351 | Long Transv. | Max | | 68.9 | |
| | | Min | 69.0 | 57.0 | 7 |

T7351 Elec. Cond. (EC) % MIN 38.0 PCT

| Chemical Composition | | SI | FE | CU | MN | MG | CR | ZN | TI | Other Each | Other Total | Aluminum |
|---|---|---|---|---|---|---|---|---|---|---|---|---|
| | Max | .40 | .50 | 2.0 | .30 | 2.9 | .28 | 6.1 | .20 | .05 | .15 | |
| Alloy 7075 | Min | | | 1.2 | | 2.1 | .18 | 5.1 | | | | REMAIN |

Lot: 667111 -Mechanical, Physical, Metallography, Quantometer Results ----------

| Tmpr | Dir | No. Test | | UTS KSI | TYS KSI | EL4D PCT |
|---|---|---|---|---|---|---|
| T7351 | Long Transv. | 2 | Max | 73.5 | 63.6 | 11.4 |
| | | | Min | 73.3 | 63.3 | 11 |

Certification of Test Report
Customer NORthwest

| Item | Customer PO | Date |
|---|---|---|
| 403816 | 1 | 14626 | 11/13 |

We hereby certify that this report represents materials shipped on the above order Copper & Brass Sales, Inc. mr

14 pc

Initialed By:

C & BS
QC. APPROVED
17-2

NOV 21 2009

NW 3

CERTIFIED INSPECTION REPORT

# Alcoa Inc.

PITTSBURGH, PA DAVENPORT WORKS

Ship From: DAVENPORT, IA.

We hereby certify that the material covered by this certificate has been inspected with, and has been found to meet, the applicable requirements described herein, including any specifications forming a part of the description and that samples representative of the material met the composition limits and had the mechanical properties shown on the face of this sheet.
Per:

Ronald G. Machette
Vice President Alcoa Mill Products

Michael J. Skoglund
Quality Assurance Manager

| 7713 | 127056 | | | | Page 2 |
|---|---|---|---|---|---|
| Ship Date | B.L. No. | Invoice No. | Alcoa No. | Item | |
| 1999-05-08 | 44914 | 27890 | DS-15237-1 | | |
| P.O. No./Govt Contract No. | | Customer | | | |
| 831105 | | C&B-WALLINGFORD | | | |

Lot: 667111 - Mechanical, Physical, Metallograpy, Quantometer Results (cont.) ----------

T7351 Elect Cond %IACS 39.5 39.5 PCT

| Cast Number | Chemical | SI | FE | CU | MN | MG | CR | ZN | TI |
|---|---|---|---|---|---|---|---|---|---|
| H7796193 | Actuals | .08 | .31 | 1.4 | .04 | 2.5 | .18 | 5.7 | .02 |

Lot: 667112 -Mechanical, Physical, Metallography, Quantometer Results ----------

| Tmpr | Dir | No. Test | | UTS KSI | TYS KSI | EL4D PCT |
|---|---|---|---|---|---|---|
| T7351 | Long Transv. | 2 | Max | 73.5 | 63.2 | 12.1 |
| | | | Min | 72.8 | 62.6 | 11.4 |

T7351 Elect Cond %IACS 39.7 39.7 PCT

| Cast Number | Chemical | SI | FE | CU | MN | MG | CR | ZN | TI |
|---|---|---|---|---|---|---|---|---|---|
| H7796193 | Actuals | .08 | .31 | 1.4 | .04 | 2.5 | .18 | 5.7 | .02 |

Certification of Test Report
Customer

| Invoice # | Item | Customer PO | Date |
|---|---|---|---|
| | | | |

We hereby certify that this report represents materials shipped on the above order
Copper & Brass Sales, Inc.

Initialed By:

NOV 2 1 2000

NW 3

Aging Landing Gear Life Extension Program
M-E-39035-112-10000-4 REV B

**MEMORANDUM**

---

To: DuWaine Emmons, NWMM
From: John Coates, MGB
Date: October 18, 2000
Subject: Statement of Work for Northwest Machining and Manufacturing
Manufacture Coupons for DPM Evaluation

---

**Background**

Under the ALGLE Program, testing will be conducted for OO-ALC/LILE to evaluate the survivability of marks applied with direct part marking processes for normal aircraft landing gear part overhaul conditions. Northwest Machining and Manufacturing was selected to manufacture the coupons for the evaluation.

**Produce and Deliver**

1. Steel Coupons
   - 1.1 Produce and deliver 22 coupons in accordance with drawing S1A (REV B) requirements.
   - 1.2 Produce and deliver 16 coupons in accordance with drawing S1B (REV B) requirements.
     - a. Deliver coupons S1B before heat treatment for marking.
     - b. Coupons S1B will be marked and returned for heat treatment.
   - 1.3 Produce and deliver 12 coupons in accordance with drawing S2A (REV B) requirements.
   - 1.4 Produce and deliver 6 coupons in accordance with drawing S2B (REV B) requirements.
     - a. Deliver coupons S2B before heat treatment for marking.
     - b. Coupons S2B will be marked and returned for heat treatment.
   - 1.5 For the Fluorescent Magnetic Particle Inspection, use full wave direct current (FWDC), wet continuous method, fluorescent type with the following acceptance/rejection criteria: NO DEFECTS ALLOWED. The intent of NO DEFECTS ALLOWED is that the inspection is conducted at the required sensitivity level and there shall be no indications allowed. The inspector performing the inspection will be certified to Level II with the inspection procedures developed by a Level III as specified in NAS-410.
   - 1.6 NWMM will not mark the coupons with the Data Matrix™ symbols.
2. Aluminum Coupons
   - 2.1 Produce and deliver 22 coupons in accordance with drawing A1A (REV B) requirements.
   - 2.2 Produce and deliver 12 coupons in accordance with drawing A2A (REV B) requirements.
   - 2.3 For the Fluorescent Penetrant Inspection, use Type I, Level 3 or 4, Method B or C, with the following acceptance/rejection criteria: NO DEFECTS ALLOWED. The intent of NO DEFECTS ALLOWED is that the inspection is conducted at the required sensitivity level and there shall be no indications allowed. The inspector performing the inspection will be certified to Level II with the inspection procedures developed by a Level III as specified in NAS-410.
   - 2.4 NWMM will not mark the coupons with the Data Matrix™ symbols.

**Verification**

1. Steel Coupons
   - 1.1 Provide manufacturing documentation for the steel coupons. The manufacturing documentation will include material certification, heat treatment certification, and final inspection certification. The manufacturing documentation will include the inspection results, the hardness test results, and the surface roughness test results.
2. Aluminum Coupons
   - 2.1 Provide manufacturing documentation for the aluminum coupons. The manufacturing documentation will include material certification, heat treatment certification, and final inspection certification. The manufacturing documentation will include the inspection results, the conductivity test results, and the surface roughness test results.

**Handling and Packaging**

1. Coat coupons in light oil between the manufacturing processes and before delivery to prevent corrosion.

**Contacts**

| | | |
|---|---|---|
| MGB: Engineering | Mr. John Coates | Phone: (801) 586-3052 |
| NWMM: Sales | Mr. DuWaine Emmons | Phone: (208) 888-5334 |

## COUPON

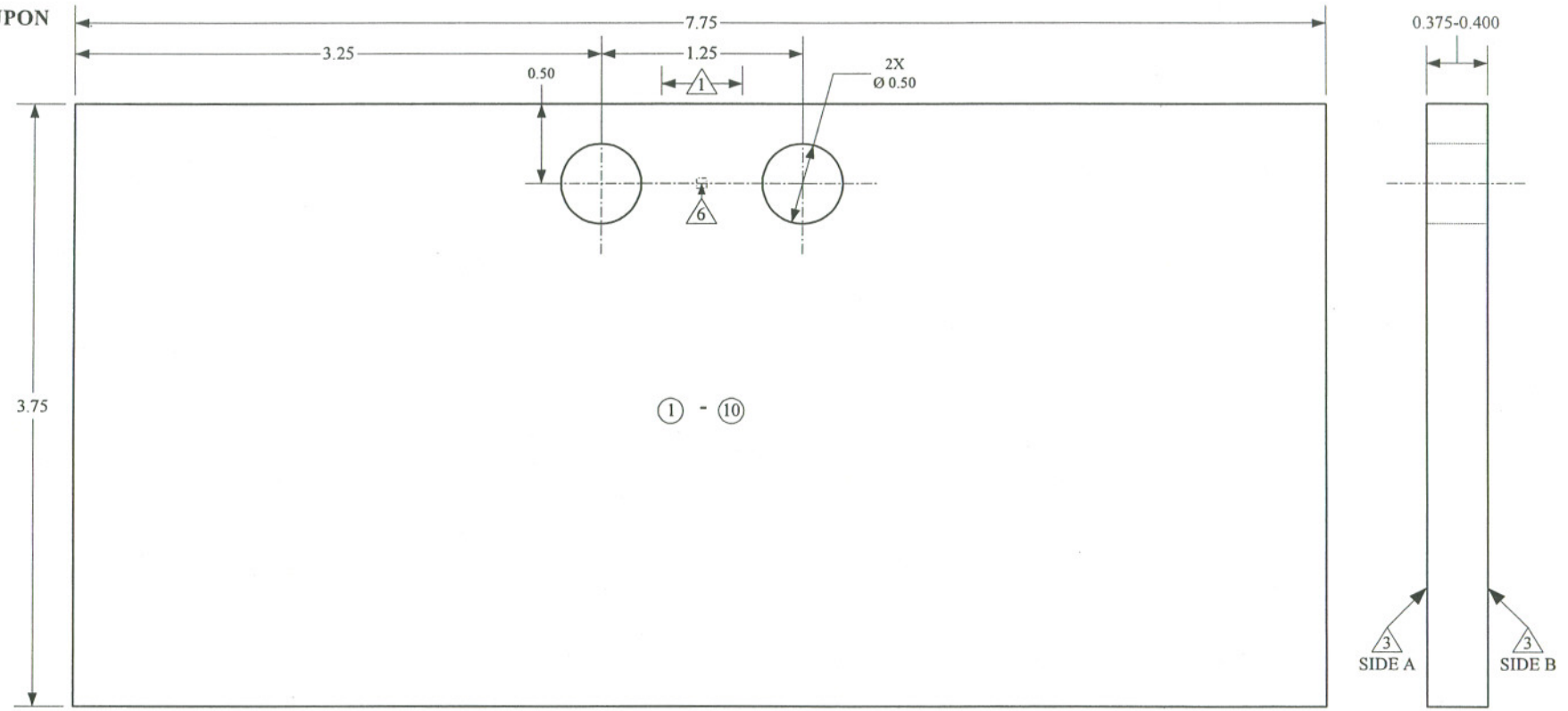


## NOTES

1. SERIALIZE THE COUPONS S1A-01 TO S1A-22 ON TOP EDGE AT NOTED LOCATION USING 0.25 IMPRESSION STAMP, 0.004-0.008 DEEP
2. HEAT TREAT AND PROCESS TO 260-280 KSI ULTIMATE TENSILE STRENGTH PER AMS-H-6875, MAXIMUM ALLOWABLE DECARBURIZATION 0.003
3. $0.025\ \frac{125}{M}\sqrt{64}$ BEFORE 2, $\frac{125}{M}\sqrt{64}$ AFTER 2
4. BREAK ALL SHARP EDGES 0.005-0.015
5. FLUORESCENT MAGNETIC PARTICLE INSPECT PER ASTM E1444
6. FOR COUPONS WITH EVEN SERIAL NUMBERS: PERFORM ROCKWELL HARDNESS C TEST PER ASTM A370 AT NOTED LOCATION
7. FOR COUPONS WITH EVEN SERIAL NUMBERS: PERFORM SURFACE ROUGHNESS MEASUREMENT PER ASME B46.1

(1) – (10) MARK SIDE A WITH DATA MATRIX™ SYMBOLS

| | | | | | | |
|---|---|---|---|---|---|---|
| ALGLE PROGRAM | TITLE: COUPON | DRAWING NUMBER: S1A | REVISION: B | DIMENSIONS: ALL DIMENSIONS IN INCHES | TOLERANCES: UNLESS OTHERWISE NOTED X.X = ± 0.1, X.XX = ± 0.05, ANGLES = ± 0.5° | DRAWN: JOHN COATES |
| DPM EVALUATION | MATERIAL: 4340 PER AMS 6415 | DATE: 10/18/00 | SHEET: 1 OF 1 | SCALE: NOT TO SCALE | | CHECKED: FRANK ZUECH |

## COUPON

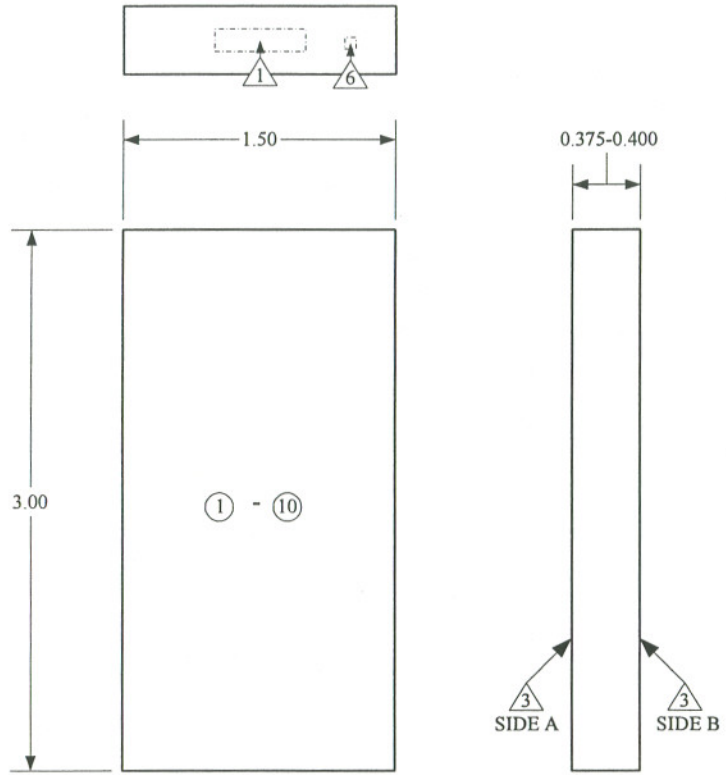


## NOTES

1. SERIALIZE THE COUPONS S2A-01 TO S2A-12 AT NOTED LOCATION USING 0.25 IMPRESSION STAMP,0.004-0.008 DEEP
2. HEAT TREAT AND PROCESS TO 260-280 KSI ULTIMATE TENSILE STRENGTH PER AMS-H-6875, MAXIMUM ALLOWABLE DECARBURIZATION 0.003
3. $0.025\ \frac{125}{M}\sqrt{64}$ BEFORE 2, $\frac{125}{M}\sqrt{64}$ AFTER 2
4. BREAK ALL SHARP EDGES 0.005-0.015
5. FLUORESCENT MAGNETIC PARTICLE INSPECT PER ASTM E1444
6. FOR COUPONS WITH EVEN SERIAL NUMBERS: PERFORM ROCKWELL HARDNESS C TEST PER ASTM A370 AT NOTED LOCATION
7. FOR COUPONS WITH EVEN SERIAL NUMBERS: PERFORM SURFACE ROUGHNESS MEASUREMENT PER ASME B46.1

(1) – (10) MARK SIDE A WITH DATA MATRIX™ SYMBOLS

| | | | | | | |
|---|---|---|---|---|---|---|
| ALGLE PROGRAM | TITLE: COUPON | DRAWING NUMBER: S2A | REVISION: B | DIMENSIONS: ALL DIMENSIONS IN INCHES | TOLERANCES: UNLESS OTHERWISE NOTED X.X = ± 0.1, X.XX = ± 0.05, ANGLES = ± 0.5° | DRAWN: JOHN COATES |
| DPM EVALUATION | MATERIAL: 4340 PER AMS 6415 | DATE: 10/18/00 | SHEET: 1 OF 1 | SCALE: NOT TO SCALE | | CHECKED: FRANK ZUECH |

**COUPON**

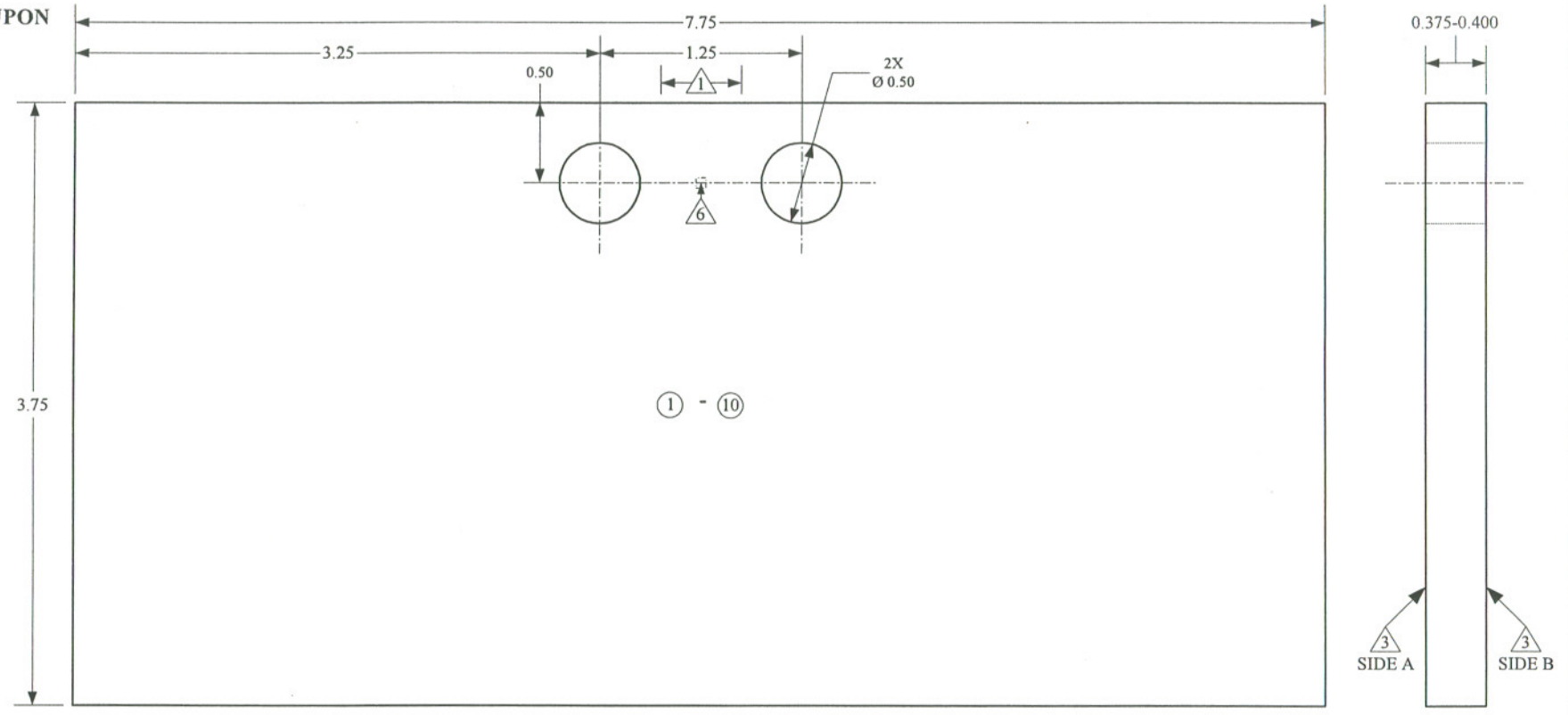


**NOTES**

1. SERIALIZE THE COUPONS S1B-01 TO S1B-16 ON TOP EDGE AT NOTED LOCATION USING 0.25 IMPRESSION STAMP, 0.004-0.008 DEEP
2. HEAT TREAT AND PROCESS TO 260-280 KSI ULTIMATE TENSILE STRENGTH PER AMS-H-6875, MAXIMUM ALLOWABLE DECARBURIZATION 0.003
3. $0.025\ \frac{125}{M}\ \frac{64}{}$ BEFORE 2, $\frac{125}{M}\ \frac{64}{}$ AFTER 2
4. BREAK ALL SHARP EDGES 0.005-0.015
5. i) FLUORESCENT MAGNETIC PARTICLE INSPECT PER ASTM E1444
   ii) INSPECT BEFORE AND AFTER MARKING (1) – (10)
6. FOR COUPONS WITH EVEN SERIAL NUMBERS: PERFORM ROCKWELL HARDNESS C TEST PER ASTM A370 AT NOTED LOCATION
7. FOR COUPONS WITH EVEN SERIAL NUMBERS: PERFORM SURFACE ROUGHNESS MEASUREMENT PER ASME B46.1

(1) – (10) i) MARK BEFORE 2
ii) MARK SIDE A WITH DATA MATRIX™ SYMBOLS

| | | | | | | |
|---|---|---|---|---|---|---|
| ALGLE PROGRAM | TITLE: COUPON | DRAWING NUMBER: S1B | REVISION: B | DIMENSIONS: ALL DIMENSIONS IN INCHES | TOLERANCES: UNLESS OTHERWISE NOTED X.X = ± 0.1, X.XX = ± 0.05, ANGLES = ± 0.5° | DRAWN: JOHN COATES |
| DPM EVALUATION | MATERIAL: 4340 PER AMS 6415 | DATE: 10/18/00 | SHEET: 1 OF 1 | SCALE: NOT TO SCALE | | CHECKED: FRANK ZUECH |

## COUPON

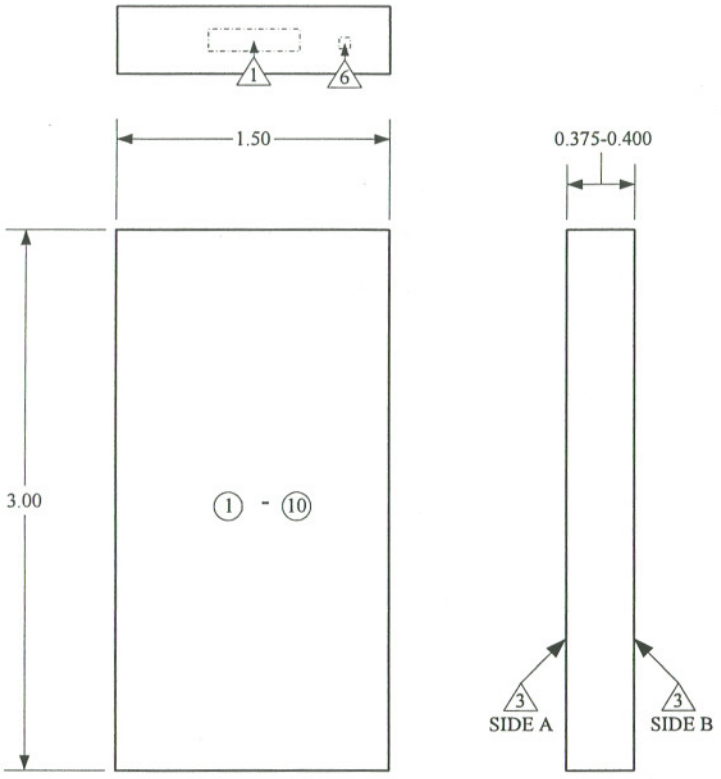


## NOTES

1. SERIALIZE THE COUPONS S2B-01 TO S2B-06 AT NOTED LOCATION USING 0.25 IMPRESSION STAMP,0.004-0.008 DEEP
2. HEAT TREAT AND PROCESS TO 260-280 KSI ULTIMATE TENSILE STRENGTH PER AMS-H-6875, MAXIMUM ALLOWABLE DECARBURIZATION 0.003
3. $0.025\sqrt{\frac{125}{M}}\sqrt{64}$ BEFORE 2, $\sqrt{\frac{125}{M}}\sqrt{64}$ AFTER 2
4. BREAK ALL SHARP EDGES 0.005-0.015
5. i) FLUORESCENT MAGNETIC PARTICLE INSPECT PER ASTM E1444
   ii) INSPECT BEFORE AND AFTER MARKING (1) – (10)
6. FOR COUPONS WITH EVEN SERIAL NUMBERS: PERFORM ROCKWELL HARDNESS C TEST PER ASTM A370 AT NOTED LOCATION
7. FOR COUPONS WITH EVEN SERIAL NUMBERS: PERFORM SURFACE ROUGHNESS MEASUREMENT PER ASME B46.1

(1) – (10) i) MARK BEFORE 2
ii) MARK SIDE A WITH DATA MATRIX™ SYMBOLS

| | | | | | | |
|---|---|---|---|---|---|---|
| ALGLE PROGRAM | TITLE: COUPON | DRAWING NUMBER: S2B | REVISION: B | DIMENSIONS: ALL DIMENSIONS IN INCHES | TOLERANCES: UNLESS OTHERWISE NOTED X.X = ± 0.1, X.XX = ± 0.05, ANGLES = ± 0.5° | DRAWN: JOHN COATES |
| DPM EVALUATION | MATERIAL: 4340 PER AMS 6415 | DATE: 10/18/00 | SHEET: 1 OF 1 | SCALE: NOT TO SCALE | | CHECKED: FRANK ZUECH |

## COUPON

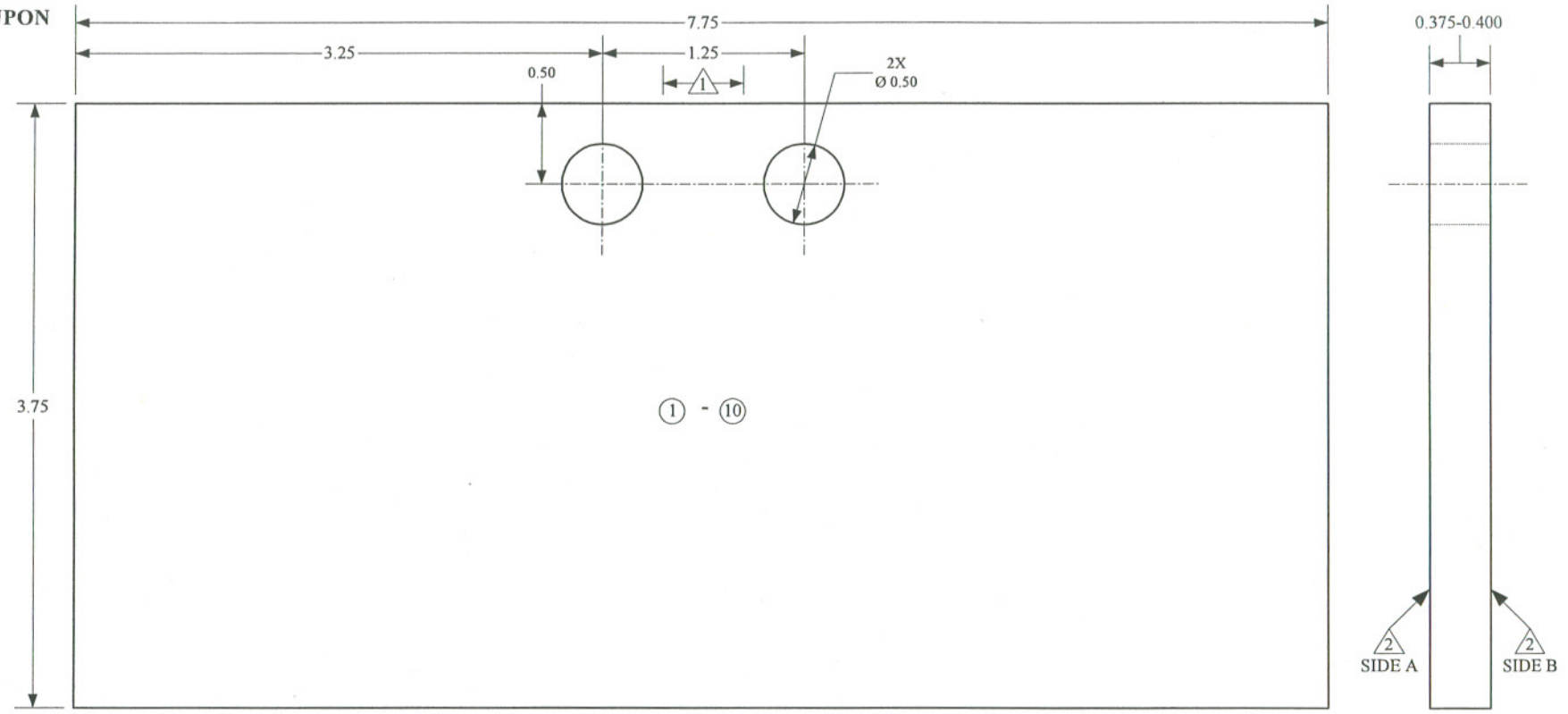


**NOTES**

1. SERIALIZE THE COUPONS A1A-01 TO A1A-22 ON TOP EDGE AT NOTED LOCATION USING 0.25 IMPRESSION STAMP, 0.004-0.008 DEEP
2. $0.025\sqrt{\frac{125}{64}}$ M
3. BREAK ALL SHARP EDGES 0.005-0.015
4. FLUORESCENT PENETRANT INSPECT PER ASTM E1417
5. FOR COUPONS WITH EVEN SERIAL NUMBERS: PERFORM CONDUCTIVITY TESTS PER MIL-STD-1537
6. FOR COUPONS WITH EVEN SERIAL NUMBERS: PERFORM SURFACE ROUGHNESS MEASUREMENT PER ASME B46.1

(1) – (10) MARK SIDE A WITH DATA MATRIX™ SYMBOLS

| | | | | | | |
|---|---|---|---|---|---|---|
| ALGLE PROGRAM | TITLE: COUPON | DRAWING NUMBER: A1A | REVISION: B | DIMENSIONS: ALL DIMENSIONS IN INCHES | TOLERANCES: UNLESS OTHERWISE NOTED X.X = ± 0.1, X.XX = ± 0.05, ANGLES = ± 0.5° | DRAWN: JOHN COATES |
| DPM EVALUATION | MATERIAL: 7075-T7351 PER AMS 4078 (0.5 INCH PLATE) | DATE: 10/18/00 | SHEET: 1 OF 1 | SCALE: NOT TO SCALE | | CHECKED: FRANK ZUECH |

## COUPON

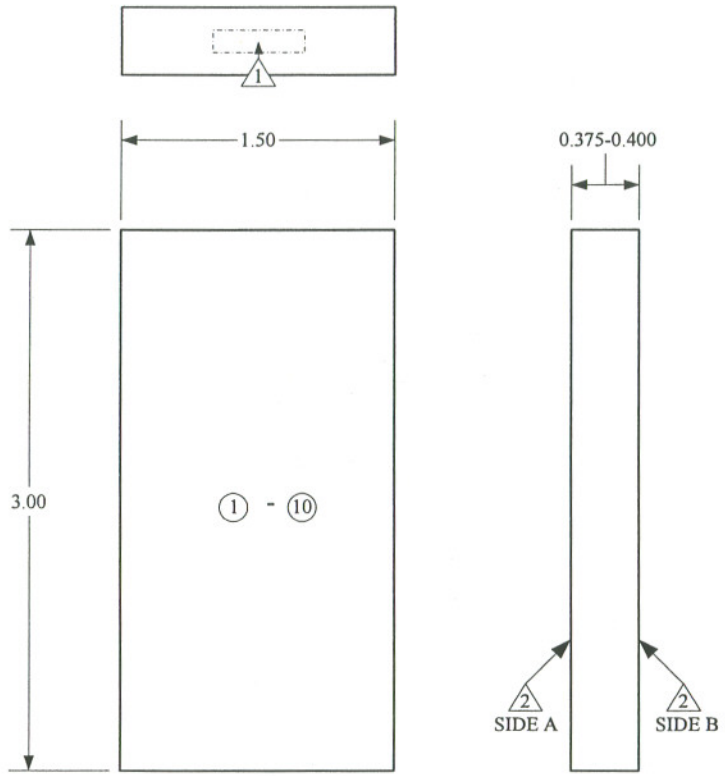


## NOTES

1. SERIALIZE THE COUPONS A2A-O1 TO A2A-12 AT NOTED LOCATION USING 0.25 IMPRESSION STAMP, 0.004-0.008 DEEP
2. 125/64 0.025 M
3. BREAK ALL SHARP EDGES 0.005-0.015
4. FLUORESCENT PENETRANT INSPECT PER ASTM E1417
5. FOR COUPONS WITH EVEN SERIAL NUMBERS: PERFORM CONDUCTIVITY TESTS PER MIL-STD-1537
6. FOR COUPONS WITH EVEN SERIAL NUMBERS: PERFORM SURFACE ROUGHNESS MEASUREMENT PER ASME B46.1

(1) – (10) MARK SIDE A WITH DATA MATRIX™ SYMBOLS

| ALGLE PROGRAM | TITLE | DRAWING NUMBER | REVISION | DIMENSIONS | TOLERANCES | DRAWN |
|---|---|---|---|---|---|---|
| | COUPON | A2A | B | ALL DIMENSIONS IN INCHES | UNLESS OTHERWISE NOTED X.X = ± 0.1 X.XX = ± 0.05 ANGLES = ± 0.5° | JOHN COATES |
| DPM EVALUATION | MATERIAL 7075-T7351 PER AMS 4078 (0.5 INCH PLATE) | DATE 10/18/00 | SHEET 1 OF 1 | SCALE NOT TO SCALE | | CHECKED FRANK ZUECH |

# APPENDIX C
# COUPON DPM PROCESS DOCUMENTATION

**Symbology Research Center** **SRC-RPT-01-001**

# USAF Aging Landing Gear Life Extension Program Marking Test Report

General Atomics Purchase Order Number H033303

**March 29, 2001**


Prepared by:

S. L. League
Project Engineer
Symbology Research Center
5000 Bradford Drive NW
Suite 500
Huntsville, Alabama 35805


RVSI Acuity CiMatrix