Downloaded from http://www.everyspec.com on 2010-12-20T14:46:53.

FM 23-11

DEPARTMENT OF THE ARMY FIELD MANUAL

90MM RECOILLESS RIFLE, M67

HEADQUARTERS DEPARTMENT OF THE ARMY
JULY 1965

Downloaded from http://www.everyspec.com on 2010-12-20T14:46:53.

Change No. 3

HEADQUARTERS
DEPARTMENT OF THE ARMY
Washington, D. C., *28 April 1970*

90-MM RECOILLESS RIFLE, M67

FM 23-11, 6 July 1965, is changed as follows:

Page 4. Paragraph 3 *a* (6) (as changed by C2) is superseded as follows:

(6) Maximum effective range:

HEAT, TP ..... 400 meters
Antipersonnel..... 300 meters

Page 4, paragraph 3b. A column for "antipersonnel" is added as follows:

(1) APERS.
(2) 6.79 pounds.
(3) 3.97 pounds.
(4) 1250 feet per second.

Page 6, paragraph 8b (1) (c). In line 2, "clockwise" is changed to read "counterclockwise."

Page 16. Paragraph 20 is superseded as follows:

20. Classification

There are three authorized rounds for the 90-mm recoilless rifle, M67. These are TP M371, HEAT M371E1, and 90-mm canister, XM590E1. The target practice (TP) round is not standard, but it is available for issue in certain areas. It is ballistically identical to the high explosive antitank (HEAT) round but contains only a small spotting charge as the projectile filler. The 90-mm canister round, XM590E1, is a fixed type antipersonnel found which functions at muzzle action.

Downloaded from http://www.everyspec.com on 2010-12-20T14:46:53.

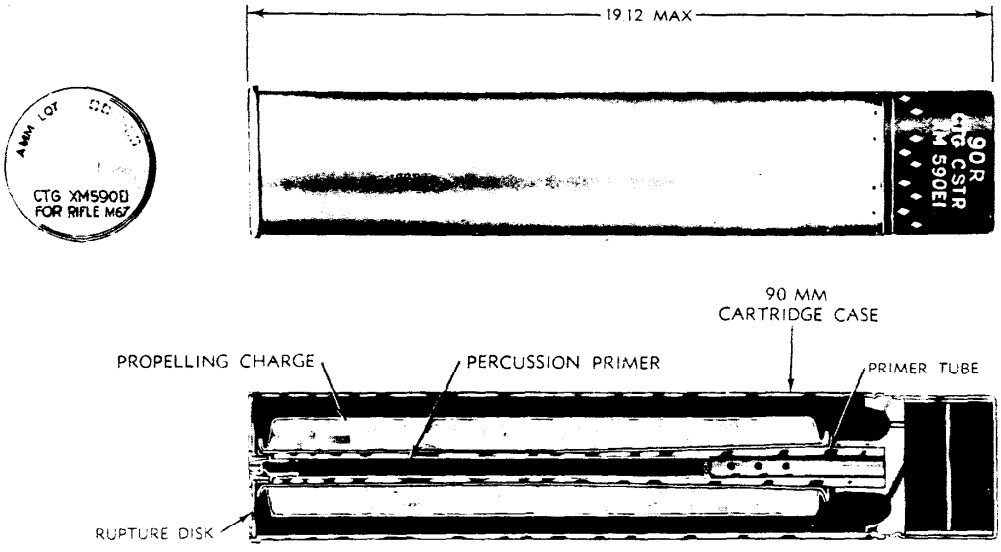

Figure 15.1. 90-mm canister cartridge XM590E1.

Downloaded from http://www.everyspec.com on 2010-12-20T14:46:53.

Page 17. Paragraph 21.1 is added after paragraph 21.

21.1 90-mm Canister, Antipersonnel, XM590E1

a. The 90-mm canister, antipersonnel round is designed for close-in defense against massed attacks or assaults on personnel positions. The canister consists of a thin-walled, deep-drawn, scored aluminum body which contains a payload of 2400 eight-grain, low-drag, fin-stabilized, steel-wire fragments called flechettes. The complete cartridge weights approximately 6.79 pounds. The projectile weights approximately 3.97 pounds and has a muzzle velocity of approximately 1250 feet per second.

b. The aluminum cartridge case (M112) is 16.29 inches long and weights 1.0 pounds. A flange at the base contains a plastic rupture disc that obstructs the gas flow during the early stages of propellant combustion. When the propellant is ignited, the rotating band on the base traps the propellent gases, building up an internal pressure which bleeds through the holes in the base. The built-up pressure bursts the body with the payload from the case when the canister leaves the rifle. The scored aluminum body strips back and the eight-grain flechettes are released, dispersing in a cone angle of approximately 8 degrees.

***Warning:* Overhead firing is prohibited.**

Page 17, paragraph 22b. In line 5, "(lucky element)" is deleted.

Page 20, paragraph 28. In line 2, "radiological" is changed to read "nuclear."

Page 20, paragraph 29c. In line 2, "radiological" is changed to read "nuclear."

Page 46. Paragraph 69 *c* (1) *(c)* (as superseded by C2) is superseded as follows:

(c) Zero the rifle at a known range between 350 and 400 meters, or use a distance which is 80 percent of the most distant target.

Page 46. Paragraph 69 *d* (1) *(c)* is superseded as follows:

(c) Zero the rifle at a known range between 350 and 400 meters, or use a distance which is 80 percent of the most distant target.

Page 53, paragraph 76 *g*. In line 2, "except when firing at a moving target" is deleted.

Page 53, paragraph 77 *c*. In line 2, "or antipersonnel" is added after "TP".

By Order of the Secretary of the Army:

W.C. WESTMORELAND,
General, United States Army,
Chief of Staff

Official:
KENNETH G. WICKHAM,
Major General, United States Army,
The Adjutant General.

Distribution:
To be distributed in accordance with DA Form 12-11 requirements for 90-MM Recoilless Rifle, M67.

U.S. GOVERNMENT PRINTING OFFICE: 1994 O 160-412

Downloaded from http://www.everyspec.com on 2010-12-20T14:46:53.

CHANGE
No. 2

HEADQUARTERS
DEPARTMENT OF THE ARMY
WASHINGTON, D.C. *19 September 1968*

90MM RECOILLESS RIFLE, M67

FM 23–11, 6 July 1965, is changed as follows:

Page 4. paragraph 3 *a* (6). "Maximum effective range—450 meters." is changed to read "Maximum effective range—400 meters."

Page 5. Paragraph 5 *b* is superseded as follows:

b. The reticle is an optical glass disc with an 0.749-inch aperture etched with a metric scale. It is graduated at 50-meter intervals at ranges up to 400 meters, and numbered every 100 meters up to 800 meters. Speed-lead indicator lines are provided at 50-meter intervals up to 400 meters and at 100-meter intervals from 400 to 800 meters. The vertical range line is extended through the 0 line to form a boresight cross. The broken horizontal lines are speed-lead indicators. Each line or space represents 2.5 mph of apparent speed. The curved lines are stadia lines, and are used to estimate ranges to targets of known dimensions. The average tank is 20-feet long and 10-feet wide; therefore, the stadia lines have been calibrated to coincide with these dimensions from 100 to 600 meters of range. A level vial at the bottom of the reticle provides a zero cant reference for the telescope so that it may be kept level when boresighting and firing the weapon (fig. 3).

*This change supersedes C1, 5 April 1967.

Downloaded from http://www.everyspec.com on 2010-12-20T14:46:53.

Page 5. Figure 3 is superseded as follows:

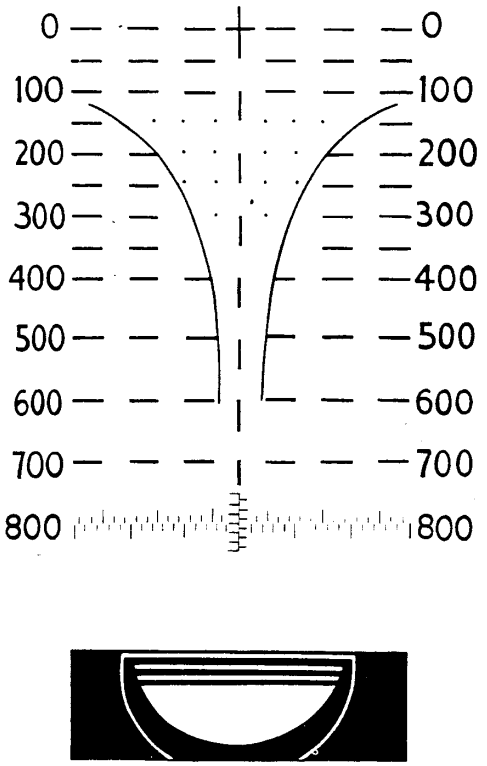

Figure 3. Sight reticle, M103 sight.

Page 5. Figure 3.1 is added as follows:

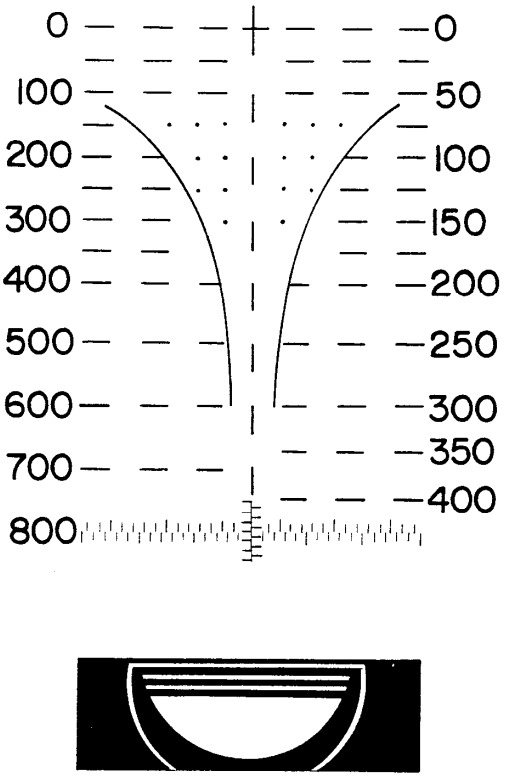

Figure 3.1 Sight reticle, M103A1 sight.

Page 6. Paragraph 5.1 is added after paragraph 5.

5.1 Direct Fire Sight—Telescope, M103A1

a. The M103A1 sight (fig. 3.1) is a modified version of the standard M103 sight. The modification has been made to the right side of the sight reticle and is to be referred to only when firing the XM591 round. The value difference of the range line has been made so that it matches the trajectory of the XM591 round.

b. On the modified sight, the range line on the right side of the sight reticle is graduated in 25-meter intervals from 0 to 200 meters and every 50 meters from 200 to 400 meters. The value of the lead lines remains unchanged.

Note. The XM591 round was an experimental type ammunition and is no longer issued. However, the M103A1 sight will be found on some 90mm recoilless rifles.

Downloaded from http://www.everyspec.com on 2010-12-20T14:46:53.

Page 6, paragraph 7. Title "Instrument Light, T25" is changed to read "Instrument Light, M54"

Page 17, paragraph 22. Title. "Fuze, PIBD, M530" is changed to read "Fuzes, PIBD, M530 and M530A1"

Page 17. Paragraph 22 *c* is added is follows:

c. The M530A1 fuze is a modification of the M530 fuze. The M530A1 fuze has a mechanism which gives it a greater arming delay time.

Page 17. Paragraph 23 is superseded as follows:

23. Subcaliber Device

a. The subcaliber device (fig. 16) for the 90mm recoilless rifle permits realistic gunner and loader training and eliminates the use of expensive service ammunition. Because targets are not destroyed as they would be if service ammunition were used, range maintenance is reduced.

b. The M49A1 subcaliber device (fig. 16.1) consists of a long, cylindrical sleeve, a barrel, a bushing with an integral hinge, a locknut housing, a firing pin and attaching hardware. The device utilizes a case blow-out principle through six equally spaced holes in the chamber shoulder section of the barrel. These holes permit the cartridge case to be blown out, and limit the pressure which in turn lowers the velocity to match ballistically the major caliber round.

c. The trajectory of the 7.62mm subcaliber cartridge is about the same as the major caliber cartridge; however, there is a telescopic reticle mismatch. When firing tables III and IV to zero the M49A1 subcaliber device, the system should be zeroed at approximately 80 percent of the maximum range of the targets to be engaged in order to minimize absolute mismatch at any point in the trajectory.

Page 18. Figure 16 is superseded as follows:

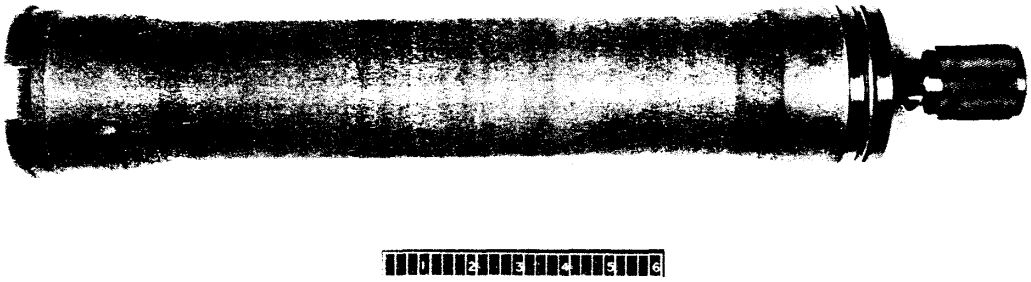

Figure 16. 7.62mm subcaliber gun, M49A1.

Downloaded from http://www.everyspec.com on 2010-12-20T14:46:53.

Page 18. Figure 16.1 is added as follows:

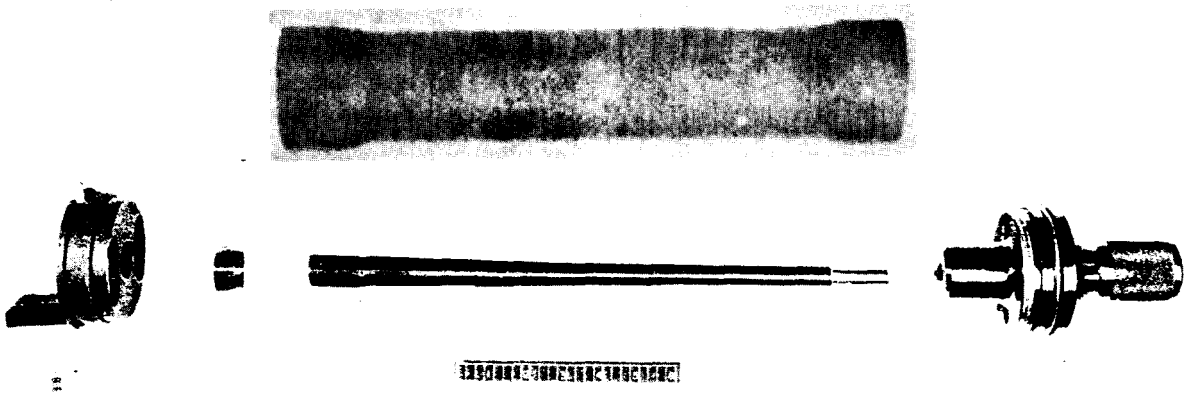

Figure 16.1. Major components of the 7.62mm subcaliber gun, M49A1.

Page 21. Paragraph 30 *c* (2) *(b)* is rescinded.

Page 25, paragraph 44 *a.* In line 4, "breechblock" is changed to read "lockring."

Page 40, paragraph 62 *b.* In lines 2, 3, and 4, "It extends 140 feet to the rear and has a 180-foot base, 90 feet on either side of the bore axis extended." is changed to read: "It extends 43 meters to the rear and has a 55-meter base, 27.5 meters on either side of the bore axis extended"; in lines 6 and 7, "90 feet" is changed to read "27.5 meters"; in line 11, "50 feet" is changed to read "15 meters."

Page 43. Paragraph 68 *b.* 1 is added as follows:

b. Additional Ammunition Requirement. Prior to firing the qualification tables, the subcaliber device will be zeroed using nine rounds, firing three-round shot groups when firing tables I and II. Firing tables II and IV, the subcaliber device will be zeroed using six rounds. Only the initial firing order will zero the device. All succeeding orders will fire two confirming zero rounds.

Downloaded from http://www.everyspec.com on 2010-12-20T14:46:53.

Page 41. Figure 32 is superseded as follows:

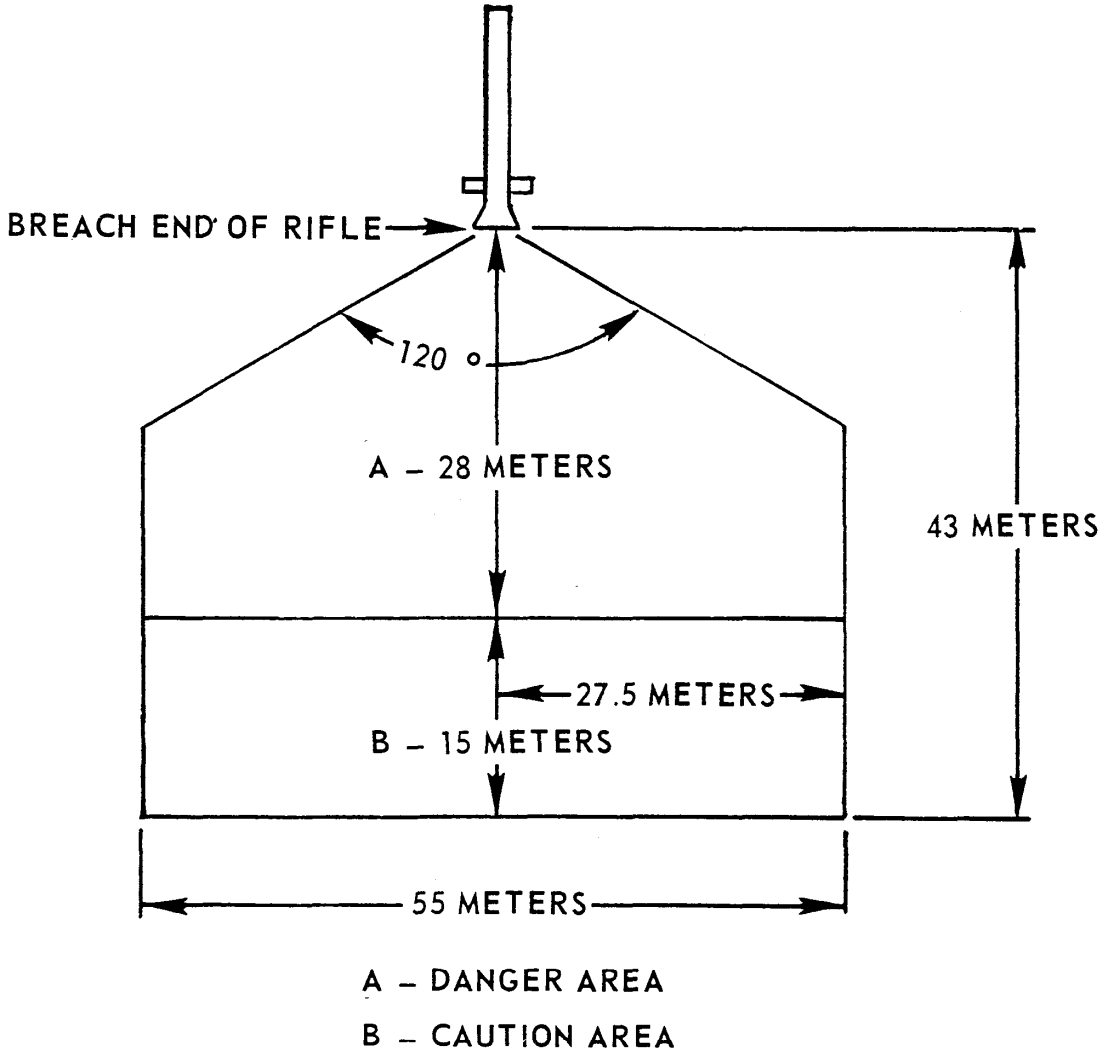

Figure 32. Backblast area.

Page 46, paragraph *69c* (1) *(a)*. In line 4, "200 to 450 meters" is changed to read: "150 to 350 meters."

Page 46. table III. In the Range (metric) column, "200—450" is changed to read "150—350" (for each trial 1–10).

Page 46. Paragraph 69 *c* (1) *(c)* is superseded as follows:

(c) Zero the rifle at a known range between 250 and 300 meters, or use a distance which is 80 percent of the most distant target.

Page 47, table V. In the Range column "250—400" is changed to read "200—350 (trial 2); "350—450" is changed to read "300—400" (trial 3).

Downloaded from http://www.everyspec.com on 2010-12-20T14:46:53.

Page 50. Figure 38 is superseded as follows:

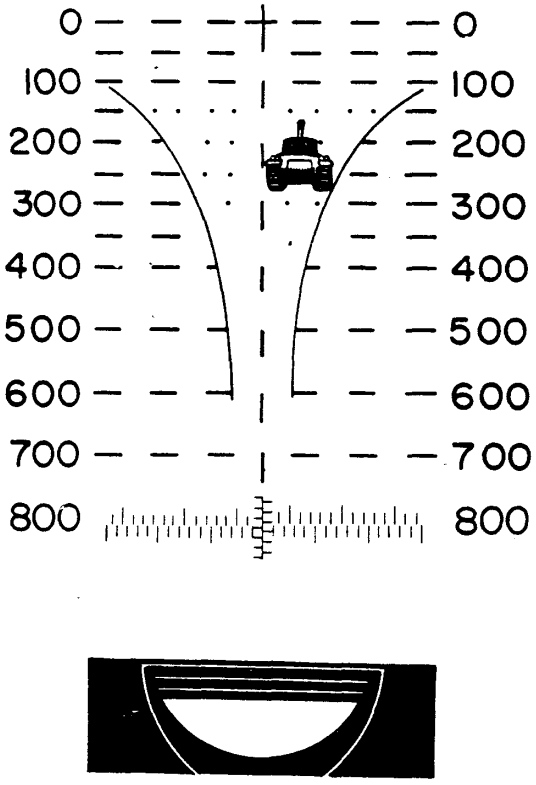

Figure 38. Half stadia picture.

Page 50. Figure 39 is superseded as follows:

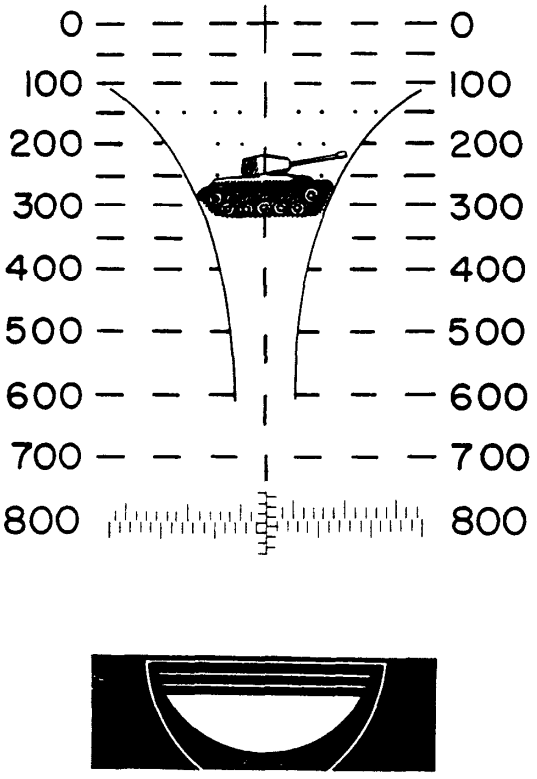

Figure 39. Full stadia picture.

Page 57. Paragraph 93 *b* is superseded as follows:

b. When firing tables III and IV, it is recommended that the subcaliber device be zeroed at a range of 80 percent of the most distant target in order to eliminate the requirement for zeroing at each specific range, and to reduce the mismatch between the trajectory and the sight reticle.

By Order of the Secretary of the Army:

W.C. WESTMORELAND,
General, United States Army,
Chief of Staff.

Official:
KENNETH G. WICKHAM,
Major General, United States Army,
The Adjutant General.

Distribution:
To be distributed in accordance with DA Form 12-11 requirements for 90-MM Recoilless Rifles, M67.

Downloaded from http://www.everyspec.com on 2010-12-20T14:46:53.

FIELD MANUAL
No. 23-11

HEADQUARTERS
DEPARTMENT OF THE ARMY
WASHINGTON, D.C., *6 July 1965*

90MM RECOILLESS RIFLE, M67

		Paragraphs	Page
CHAPTER 1.	INTRODUCTION	1-3	3
2.	MECHANICAL TRAINING		
Section I.	Fire control equipment	4-7	5
II.	Disassembly, assembly, and operation	8-10	6
III.	Malfunctions, stoppages, and immediate action	11-15	15
IV.	Spare parts and accessories	16, 17	16
V.	Ammunition	18-23	16
VI.	Maintenance and inspection	24-27	18
VII.	Decontamination procedures	28, 29	20
VIII.	Destruction in event of imminent capture	30, 31	21
CHAPTER 3.	PREPARATORY MARKSMANSHIP		
Section I.	General	32, 33	23
II.	Individual duties	34-36	23
III.	Crew drill	37-44	24
IV.	Gunner and assistant gunner training	45-51	25
V.	Range procedures and safety	52-62	38
CHAPTER 4.	MARKSMANSHIP TRAINING		
Section I.	General	63-67	42
II.	Qualification and familiarization firing	68, 69	42
CHAPTER 5.	TECHNIQUE OF FIRE		
Section I.	General	70, 71	48
II.	Range determination, and estimation of apparent speed and lead	72-75	49
IV.	Fire commands	76-86	52
V.	Fire control	87-90	55
VI.	Boresighting	91-92	56
VII.	Zeroing the subcaliber device	93, 94	57
CHAPTER 6.	ADVICE TO INSTRUCTORS		
Section I.	General	95, 96	58
II.	Standards for training	97-99	58
APPENDIX.	REFERENCES	-----	59
INDEX		-----	60

DISTRIBUTION RESTRICTION: Approved for public release; distribution is unlimited.

*This manual supersedes TC 23-5, 2 May 1962, including C 1, 10 August 1964.

Downloaded from http://www.everyspec.com on 2010-12-20T14:46:53.

CHAPTER 1
INTRODUCTION

1. Purpose and Scope

a. This manual provides information for training personnel to operate the 90mm recoilless rifle, M67. It includes mechanical training, fire control instruments, spare parts and equipment, maintenance, ammunition and fuzes, crew drill, marksmanship, technique of fire, and advice to instructors concerning the weapon. The material presented herein is applicable to nuclear and nonnuclear warfare.

b. For information pertaining to detailed disassembly and assembly, refer to TM 9-1015-223-12.

c. Doctrine in FM 7-11 on the tactical employment of the platoon antitank weapon applies to the 90mm rifle, M67.

d. Users of this manual are encouraged to submit recommended changes or comments to improve the manual. Comments should be keyed to the specific page, paragraph, and line of the text in which the change is recommended. Reasons should be provided for each comment to insure undemanding and complete evaluation. Comment should be forwarded direct to the Commandant, United States Army Infantry School, Fort Benning, Ga., 31905.

2. Characteristics

The 90mm recoilless rifle, M67, is a lightweight, portable, crew-served weapon intended primarily as an antitank weapon. It can be employed in an antipersonnel role too. It is designed to be fired primarily from the ground using the bipod and monopod, but it may be fired from the shoulder. It is an air-cooled, breech-loaded, single-shot rifle that fires fixed ammunition. The rifle is equipped with a manually operated breech mechanism and a percussion-type firing mechanism. It is designed for direct firing only, and sighting equipment for this purpose is furnished with each weapon (figs. 1 and 2).

3. Tabulated Data

a. 90mm Recoilless Rifle, M67.

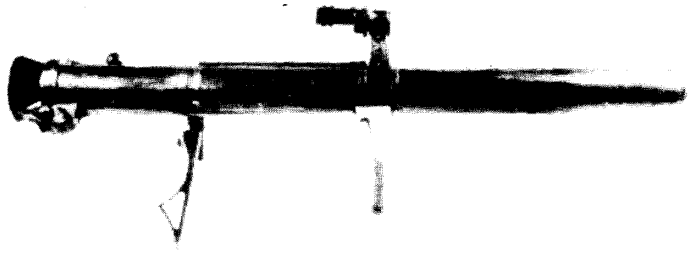

Figure 1. Right side view of the M67.

Downloaded from http://www.everyspec.com on 2010-12-20T14:46:53.

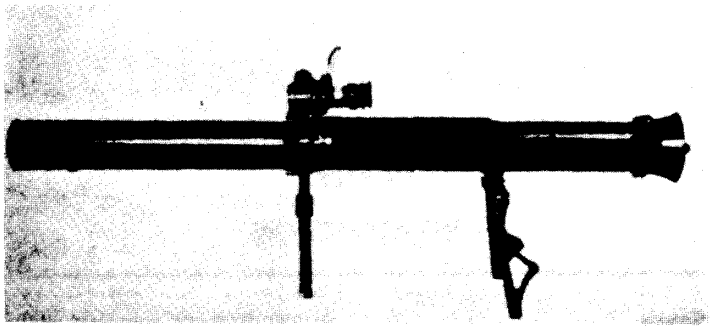

Figure 2. Left side view of the M67.

(1) *Weight:*
Complete system (unloaded) -- 35 pounds.
Telescope with mount and instrument light ---------- 2½ pounds.
(2) Overall length ---------- 53 inches.
(3) Height ground mounted (approx) ---------- 17 inches.
(4) Maximum range (approx.) -- 2,100 meters.
(5) Maximum range (as determined by sight graduations) - 800 meters
(6) Maximum effective range --- 450 meters
(7) Rates of fire ---------- Rapid: 1 round each 6 seconds, not to exceed 5 rounds.
Sustained : 1 round per minute indefinitely.

Note: When firing the rapid rate of fire, a 15-minute cooling period must be observed after every five rounds.

b. *Ammunition.*

(1) Type used -----	HEAT -----	TP.
(2) Weight of round (approx.).	9¼ pounds---	9¼ pounds.
(3) Weight of projectile (approx.).	6¾ pounds---	6¾ pounds.
(4) Muzzle velocity (approx.).	700 feet per second.	700 feet per second.

Downloaded from http://www.everyspec.com on 2010-12-20T14:46:53.

CHAPTER 2

MECHANICAL TRAINING

Section I. FIRE CONTROL EQUIPMENT

4. General

In order to keep the M67 operating effectively, all crew members must know the following:

a. Disassembly and assembly of the weapon to the extent authorized.

b. Common causes of stoppages.

c. Immediate actions to clear the weapon.

d. Maintenance procedures.

5. Direct Fire Sight—Telescope, M103

The 90mm rifle is equipped with the M103 sight for direct fire. There is no provision for an indirect fire sight since this weapon is not designed for an indirect fire role.

a. The M103 telescope has a fixed-focus, 3-power magnification, and a field of view of 10° (fig. 3).

b. The reticle is an optical glass disc with an 0.749-inch aperture etched with a metric scale. It is graduated at 50-meter intervals at ranges up to 800 meters, and numbered every 100 meters up to 800 meters. Lead lines are provided at 50-meter intervals up to 400 meters and at 100-meter intervals between 400 and 800 meters. The top vertical line is extended through the 0 line to forma boresight cross. Lead lines and spaces, each representing 5 mils, are provided horizontally for 30 mils on either side of the vertical centerline. Sixty l-mil spaces along the 800-meter range line and twelve l-mil spaces along the vertical axis are provided for small adjustments to the line of fire. Stadia lines are provided for ranging on targets having a 10- or 20-foot dimension. A level vial at the bottom of the reticle provides a zero cant reference for the telescope so that it may be kept level (fig. 3).

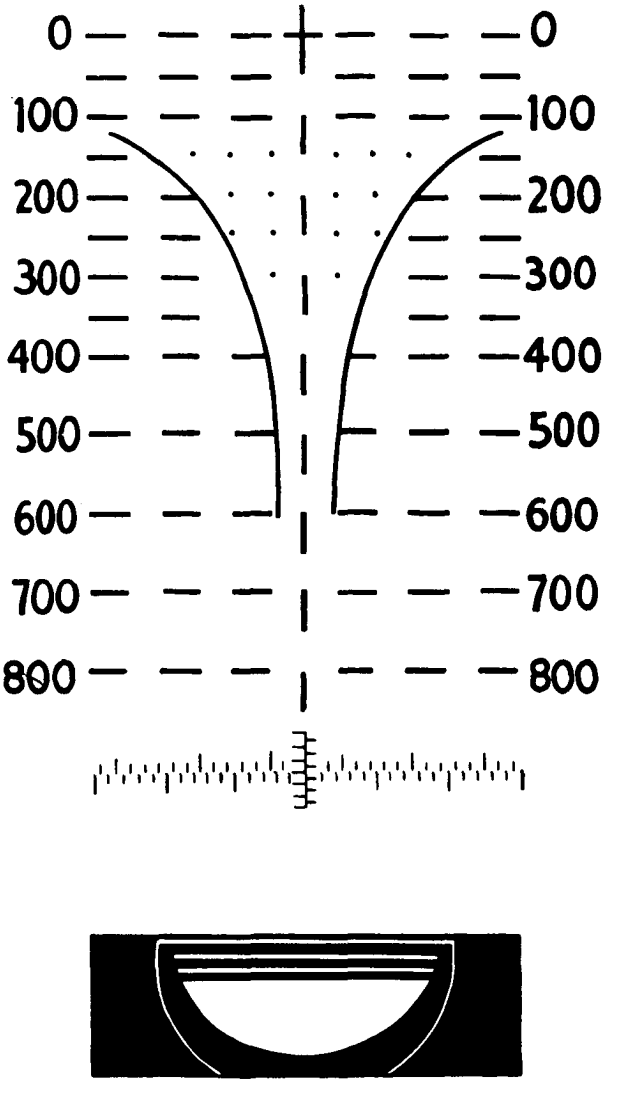

Figure 3. Sight recticle, M103 sight.

Downloaded from http://www.everyspec.com on 2010-12-20T14:46:53.

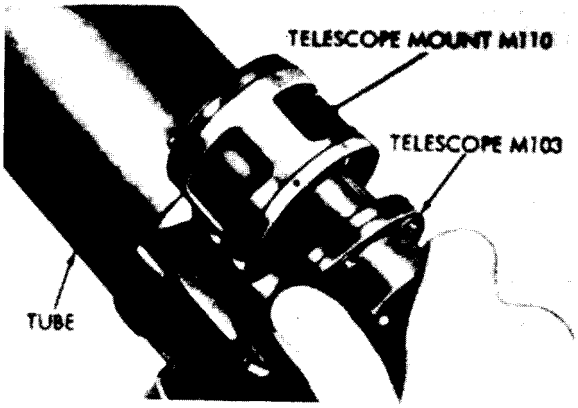

Figure 4. M110 mount for telescope.

c. A circular red glass window is provided in the wall of the telescope housing, adjacent to the reticle, to enable both the reticle and level vial to be illuminated. The red glass permits illumination with a minimum loss of target contrast.

6. Telescope Mount, M110

The telescope mount, M110, (fig. 4) holds the telescope, M103, to the weapon. The telescope mount is designed so the telescope can be inserted and seated rapidly and with assured replacement accuracy. The mount also features screws which enable boresight adjustment of the telescope with respect to the weapon in azimuth and in elevation. The telescope mount, M110, fits in the front bracket assembly.

7. Instrument, Light, T25

The sight reticle of the M103 telescope can be illuminated (fig. 5). A dovetail slot on the telescope receives the lamp bracket of the instrument light. The instrument light is powered through a lead wire by two BA42 flashlight batteries in the battery case. A rheostat knob on the end of the battery case turns the light on and off and controls the amount of illumination of the sight reticle.

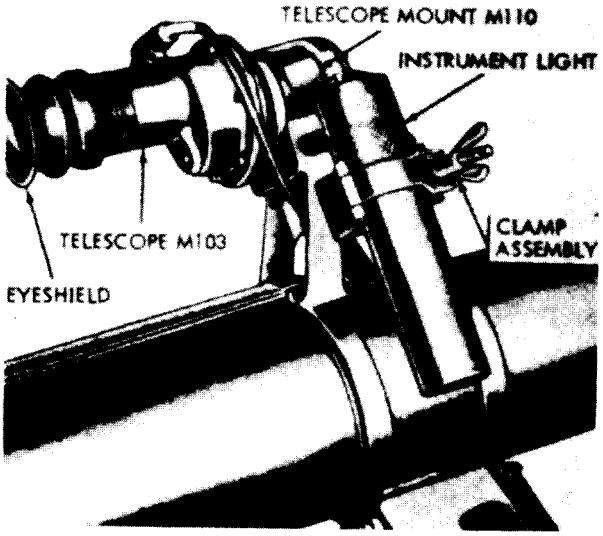

Figure 5. Instrument light, T25.

Section II. DISASSEMBLY, ASSEMBLY, AND OPERATION

8. Disassembly of the Breech anf Hinge Mechanism

a. General. Operator and organizational maintenance of the breech and hinge mechanisms is limited to operations covered herein; for all other maintenance, notify maintenance personnel.

b. Breech and Hinge Mechanism Components.

(1) *Disassembly.*

(a) Make sure the weapon is clear and not cocked.

(b) With the breechblock in the closed and locked position unscrew the firing pin cap (1, fig. 6) and remove it and the firing pin spring (2, fig. 6 and fig. 7).

(c) Rotate the safety (3, fig. 6) 45 degrees clockwise from the FIRE posit ion; pull up and remove (fig. 8). The hinge block end of the cable assembly is now free.

(d) Pull the hinge block end of the cable assembly forward and remove it from the hinge block (fig. 9).

(e) Unlock and open the breechblock. Push downward on the hinge pin (4, fig. 6) and remove (fig. 10).

(f) Remove the extractor link (6, fig. 6) and the extractor (7, fig. 6).

(g) To prevent the sear from dropping down and blocking the lockring, hold the breechblock with the hinge portion up; depress the detent plunger (10, fig. 6), rotate the lockring (8, fig. 6) counterclockwise, and remove (fig. 11).

Downloaded from http://www.everyspec.com on 2010-12-20T14:46:53.

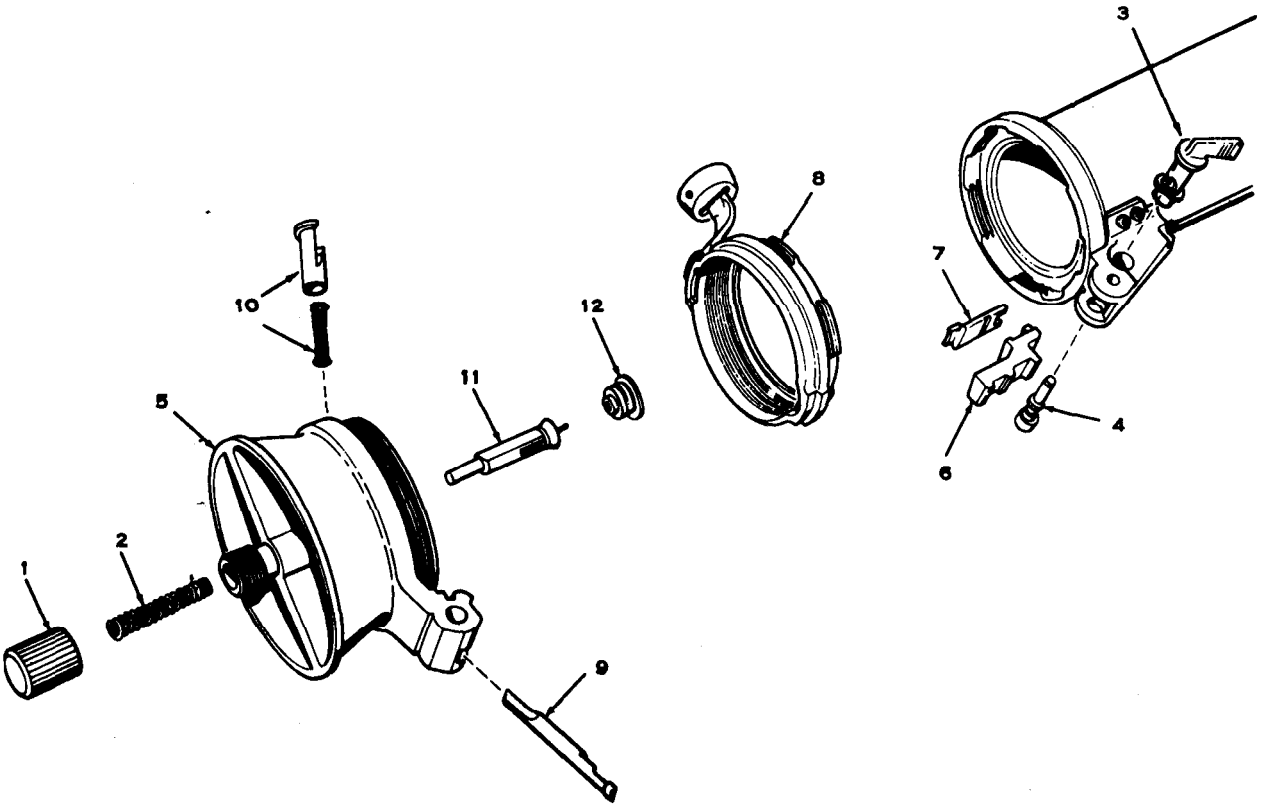

1 - FIRING PIN CAP
2 - FIRING PIN SPRING
3 - RECOILLESS RIFLE SAFETY
4 - HINGE PIN
5 - BREECHBLOCK
6 - EXTRACTOR LINK
7 - EXTRACTOR
8 - LOCKRING
9 - SEAR
10 - DETENT PLUNGER AND SPRING
11 - FIRING HAMMER
12 - HAMMER BUSHING

Figure 6. Breech and hinge mechanism, exploded view.

(h) Turn the breechblock over and remove the sear (9, fig. 6 and fig. 12).

(i) Remove detent plunger and spring (10, fig. 6 and fig. 13).

(j) Insert the small end of the hinge pin into the rearward end of the breechblock housing and tap the firing hammer (11, fig. 6) and hammer bushing (12, fig. 6) forward until free of the breechblock housing. Remove the firing hammer and hammer bushing from the front of the breechblock housing.

(2) *Assembly.*

(a) Holding the breechblock with the hinge portion up, install the firing hammer (11, fig. 6) and hammer bushing (12, fig. 6).

(a) Replace the sear (9, fig. 6).

(c) Replace the detent plunger and spring (10, fig. 6).

(d) While holding the breechblock with the hinge portion up, depress the detent plunger and install the lockring (8, fig. 6), turning it clockwise until tight; then turn counterclockwise until two distinct clicks are heard.

(e) Install the extractor (7, fig. 6) and the extractor link (6, fig. 6).

(f) With the extractor link in its full extract position, install the breechblock, making sure that the hinge portion of the breechblock enters the opening in the hinge block and engages the recess in the extractor link.

Downloaded from http://www.everyspec.com on 2010-12-20T14:46:53.

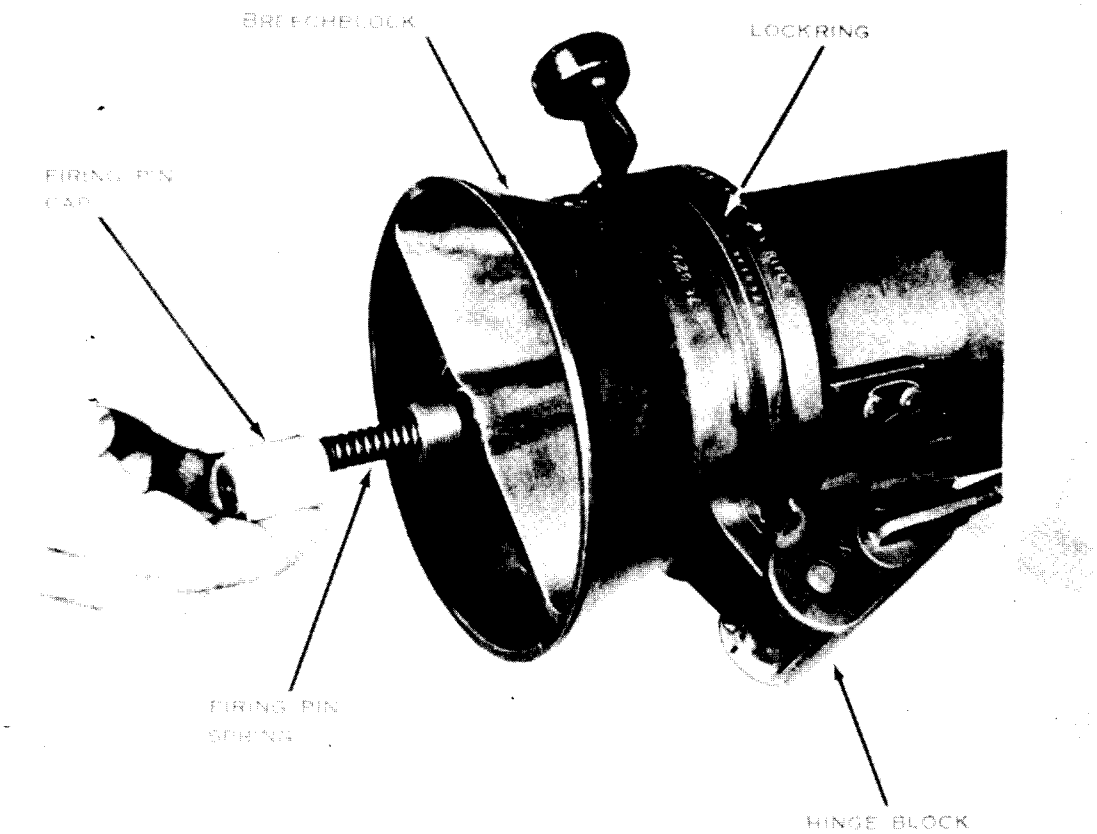

Figure 7. Removing and installing the firing pin cap and firing pin spring.

(g) Aline the hinge pin holes in the breechblock and hinge block, then install the hinge pin (4, fig. 6).

(h) Install the cable assembly in the hinge block with the notched portion that will mate with the safety facing away from the rifle tube.

(i) Position the recoilless rifle safety 45 degrees clockwise from the FIRE position, push downward, and rot ate it clockwise to the FIRE position.

(j) Install the firing pin spring and firing pin cap.

9. Principle of Recoilless Operation

The recoilless principle is based on the escape of a portion of the propellant gases to the rear of the weapon. The escape of these gases is controlled no movement of the weapon occurs (fig. 14).

10. Mechanical Functioning

a. In order to keep the 90mm rifle operating effectively, all crew members must understand the principles of operation and functioning of the weapon and its various parts.

b. Mechanical functioning is divided into three classes:

(1) Opening the breech.
(2) Closing the breech.
(3) Firing the piece.

c. Discussion of functioning may start with any of the three phases. Assuming that a cartridge has been fired, phases then occur as shown in *b* above. This represents one complete cycle of functioning.

d. Opening the Breech.

(1) *Unlocking.* As the lockring (8, fig. 6) is rotated clockwise to unlock the breechblock (5, fig. 6), a cam surface on the

Downloaded from http://www.everyspec.com on 2010-12-20T14:46:53.

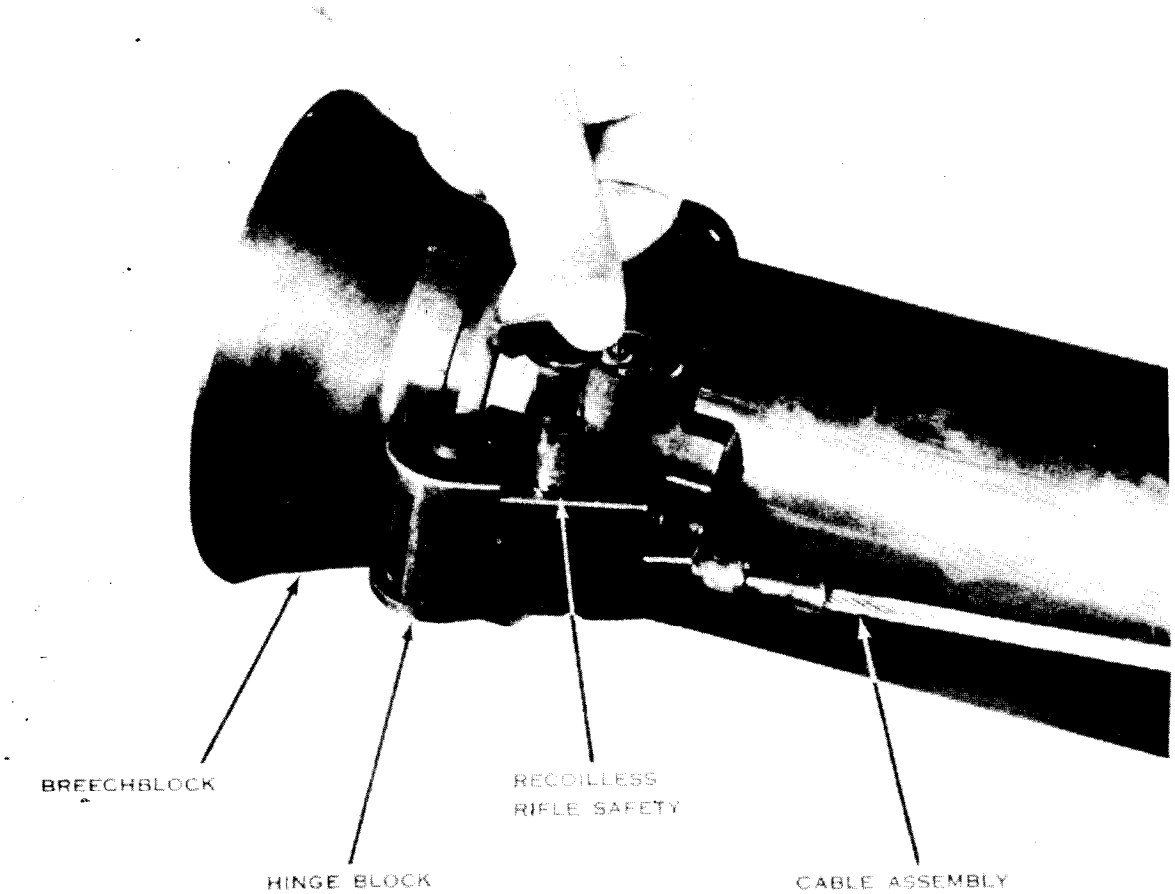

Figure 8. Removing and installing the safety mechanism.

interior of the lockring (8, fig. 6) comes in contact with the sear (9, fig. 6) and moves it inward. The cam surface exerts pressure against the firing hammer (11, fig. 6), forcing the firing hammer and firing pin spring (2, fig. 6) rearward. As the lockring (8, fig. 6) is further rotated clockwise, it is arrested by the detent plunger (10, fig. 6) and at this point the breechblock (5, fig. 6) is unlocked.

(2) *Cocking.* The weapon is normally cocked by opening the breechblock; however, the weapon may be cocked without opening the breechblock. This is accomplished by rotating the lockring to the unlocked position and then rotating it back to the locked position without opening the breechblock. When the lockring is rotated to the unlocked position and the breechblock is swung to the open position, it pivots on the hinge pin (4, fig. 6). A tooth on the inner hinge portion of the breechblock engaged in a recess on the extractor link (6, fig. 6) cams the extractor link and extractor (7, fig. 6) rearward out of the chamber.

e. Closing the Breech. As the breechblock is swung to the closed position, the tooth on the inner hinge portion of the breechblock retracts the extractor link (6, fig, 6) and extractor (7, fig. 6) into the chambers. As the lockring is rotated counterclockwise to the locked position, the cam

Downloaded from http://www.everyspec.com on 2010-12-20T14:46:53.

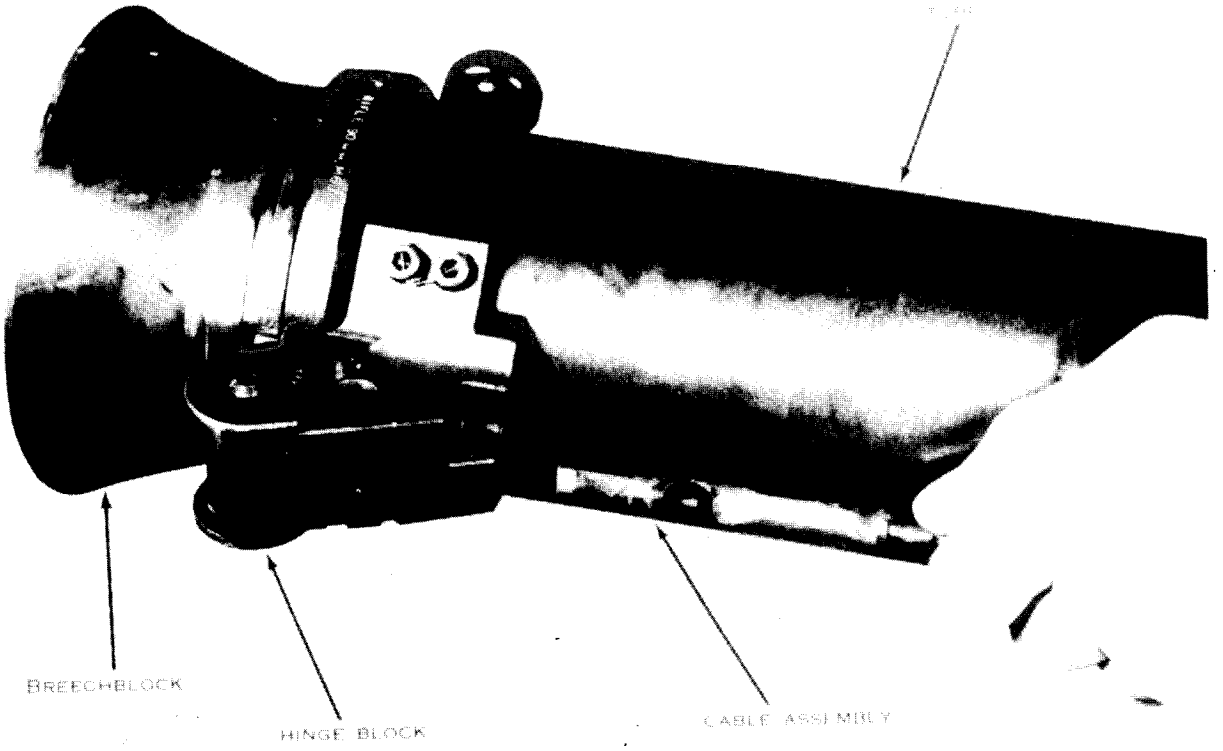

Figure 9. Removing and installing the cable assembly.

surface on the interior of the lockring allows the sear (9, fig. 6) to move outward and become engaged with the hinge block end of the cable assembly.

f. Firing the Piece. When the breechblock is swung to the open position the recoilless rifle safety automatically positions itself to the safe position. To fire the weapon the safety must be rotated from the SAFE to the FIRE position. When the trigger safety is depressed the trigger assembly is unlocked. As the trigger assembly is squeezed pressure is applied to the bottom of the cable actuating lever which pivots on the spring pin and imparts a pull on the cable assembly. As the cable assembly moves forward, the hinge block end oft he cable assembly releases the sear allowing it to move forward under pressure from the firing pin spring. As the firing hammer is released, the firing pin spring propels the firing pin against the primer, firing the projectile.

Downloaded from http://www.everyspec.com on 2010-12-20T14:46:53.

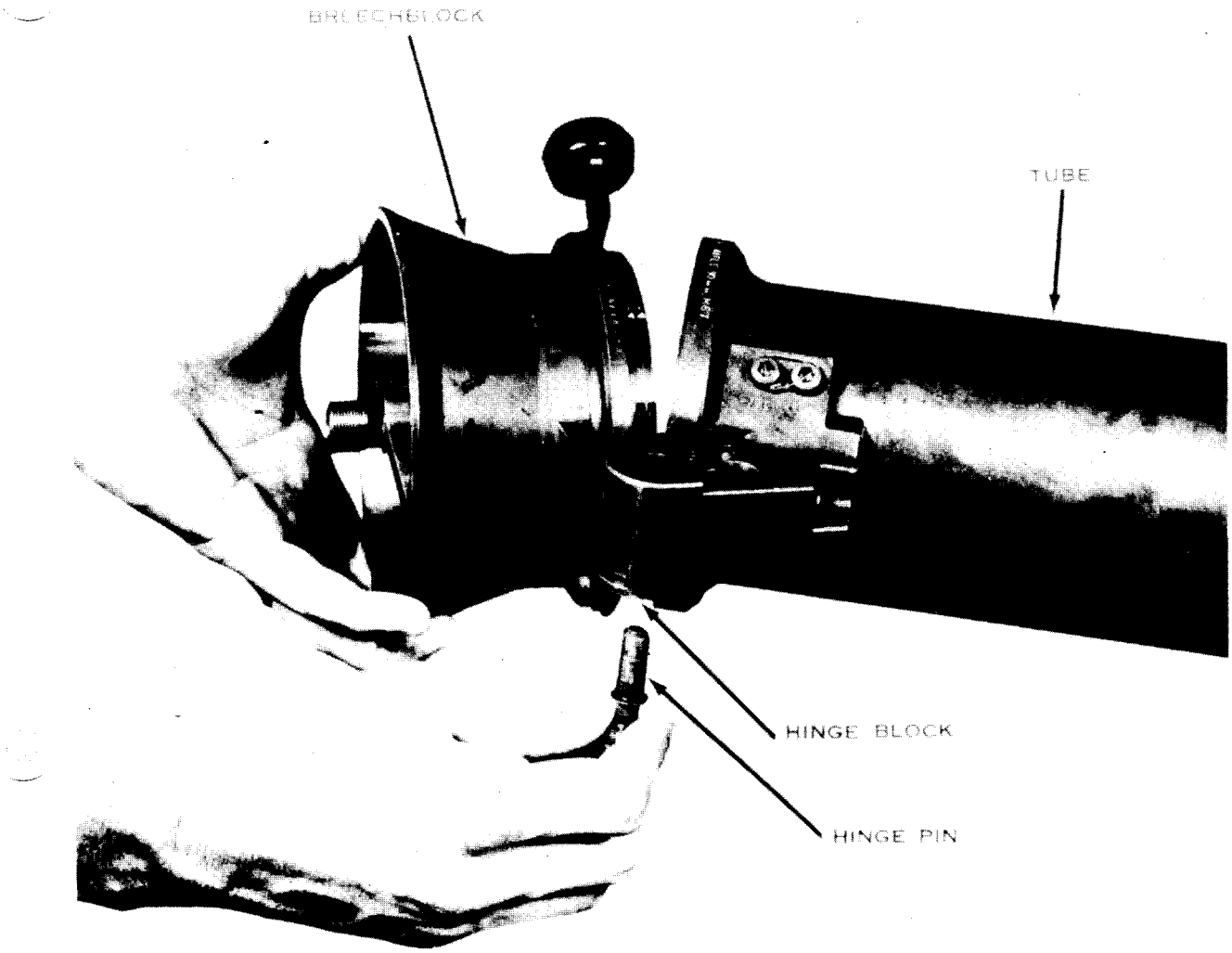

Figure 10. Removing and installing the hinge pin.

Downloaded from http://www.everyspec.com on 2010-12-20T14:46:53.

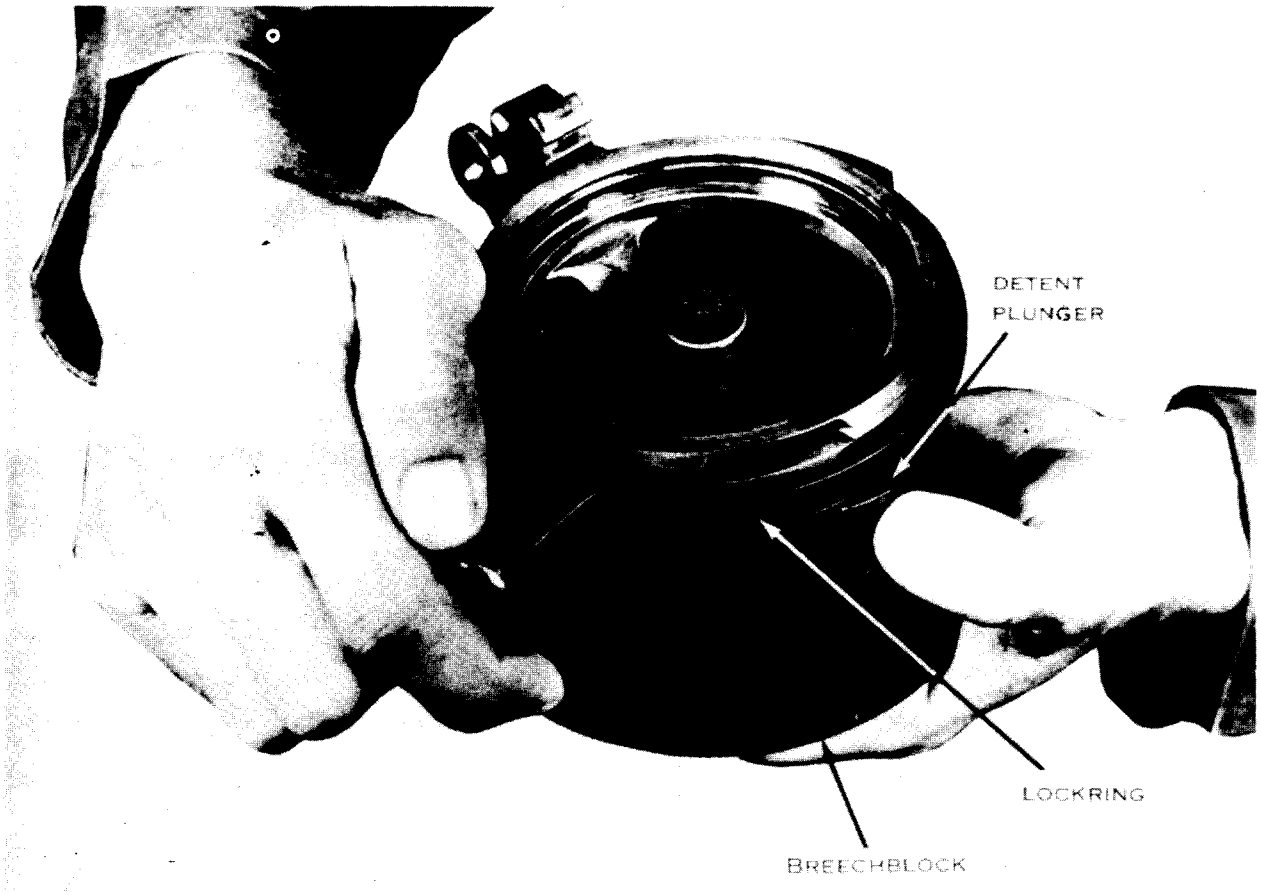

Figure 11. Removing the lockring.

Downloaded from http://www.everyspec.com on 2010-12-20T14:46:53.

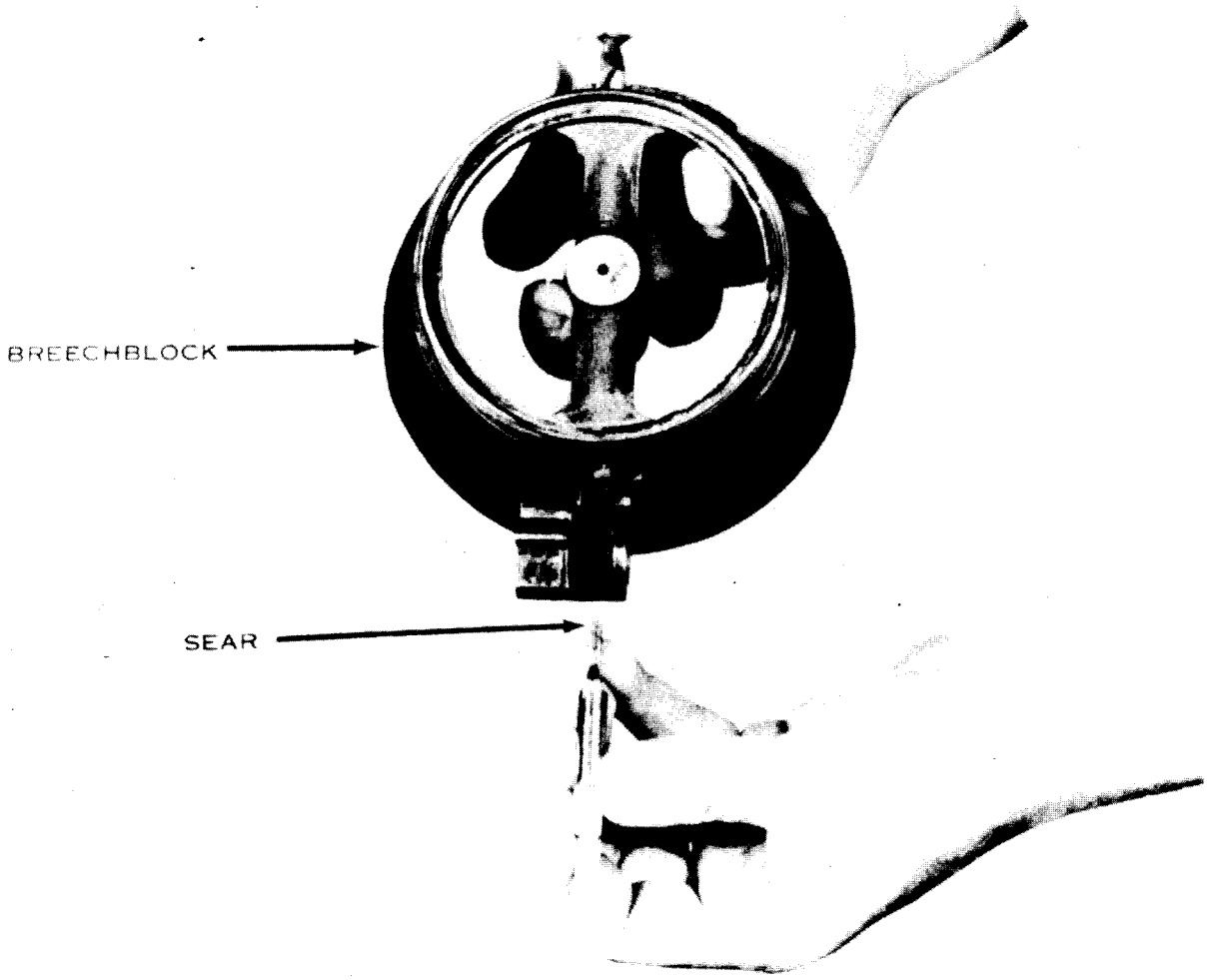

Figure 12. Removing the sear.

Downloaded from http://www.everyspec.com on 2010-12-20T14:46:53.

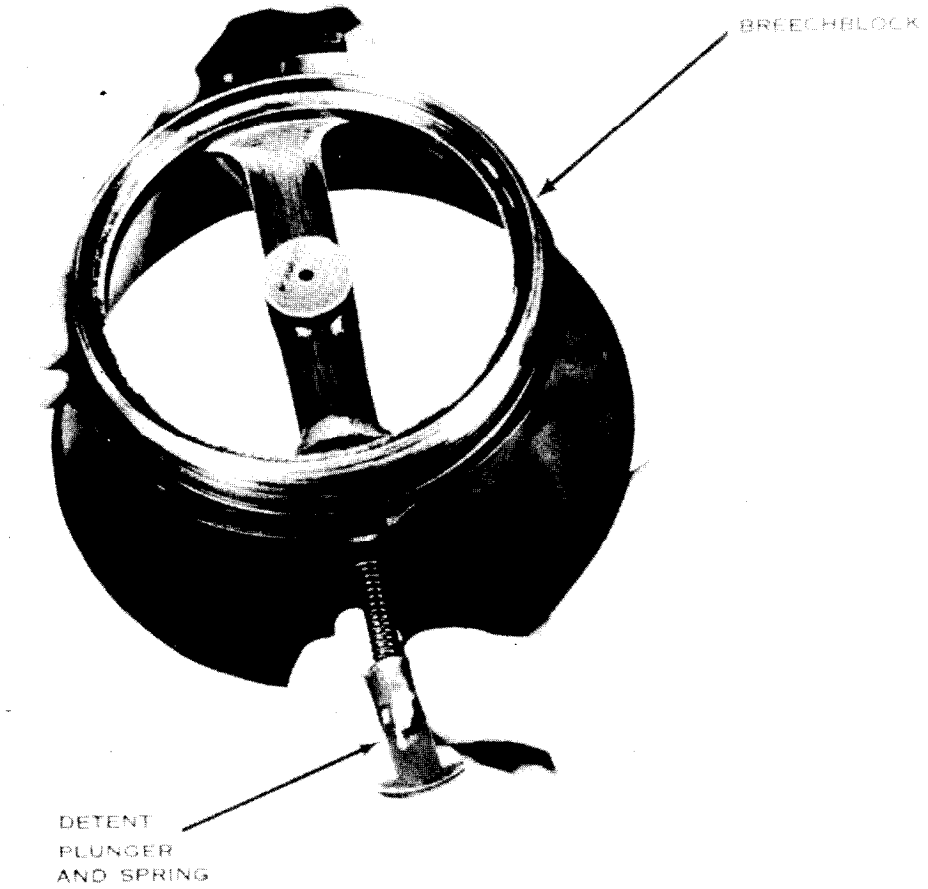

Figure 13. Removing the detent plunger and spring.

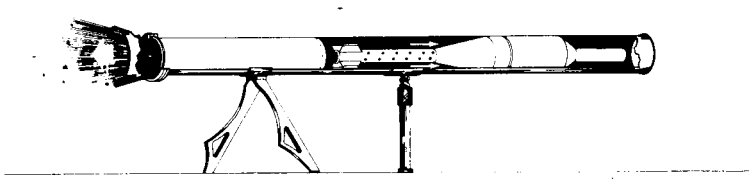

Figure 14. Action of the gases.

Downloaded from http://www.everyspec.com on 2010-12-20T14:46:53.

Section III. MALFUNCTIONS, STOPPAGES, AND IMMEDIATE ACTION

11. Malfunctions and Restoration of Balance

When a recoilless weapon functions properly, it does not move when fired. The forces acting on the rifle neutralize each other and the rifle is balanced. If there is a major movement (either forward or rearward) when the rifle is fired, it must be sent to maintenance for restoration of balance.

12. Terms

a. A *stoppage* is an unintentional interruption of the cycle of operation.

b. Immediate action is the unhesitating application of a probable remedy to reduce a stoppage without considering the cause of the stoppage.

13. Stoppages

Prevention is the best solution to all stoppages. When the crew completely understands the operation of the weapon and applies normal care and frequent cleaning, the most common types of stoppages seldom occur. By making frequent checks and inspections, the crew insures the detection of worn or broken parts. Some of the more common stoppages causing the 90mm rifle to function improperly are:

a. Failure to Fire. This stoppage may be caused by—

(1) Defective primer of the ammunition.
(2) Weak or broken firing pin spring.
(3) Broken or deformed firing pin.
(4) Accumulation of carbon in the firing mechanism.
(5) Broken or maladjusted firing cable.
(6) Failure of breechblock to lock.

b. Failure to Cock. This stoppage may be caused by—

(1) Broken or damaged sear or sear catch.
(2) Broken or damaged cable assembly.

c. Failure to Extract. This stoppage may be caused by—

(1) Broken or damaged extractor.
(2) Broken or damaged link assembly.
(3) Deformed cartridge case.
(4) Broken or damaged tooth on breechblock hinge.

d. Failure to Load. This stoppage may be caused by—

(1) Damaged or deformed rotating band.
(2) Deformed or oversized round.
(3) Dirt, unburned propellant, or pieces of the cartridge case liner accumulated in the lands and grooves near the chamber.

14. Immediate Action

a. When the rifle fails to fire, the gunner releases pressure on the trigger and calls MISFIRE. The loader repeats MISFIRE, and waits 1 minute. Then the loader unlocks and locks the breech and calls UP. The gunner attempts to fire.

b. Should the rifle still fail to fire, the gunner releases pressure on the trigger and calls MISFIRE. The loader repeats MISFIRE, and again waits 1 minute. Then the loader opens the breech and unloads, being careful to catch the round as it is extracted. **If the rifle has been fired continuously for a considerable length of time before a misfire occurs, it becomes hot. This might cause the propellent charge to ignite by cookoff. If the rifle is hot, cool with water before removing the cartridge. If water is not available, all personnel will leave their positions until the rifle has cooled** (training only).

15. Reduction of Stoppages

If the rifle has misfired a second time and immediate action procedures fail to reduce the stoppages, it is necessary to apply additional measures.

a. After unloading the cartridge and placing it in a safe area, the gunner and loader should consider the following questions in determining the cause of the stoppage:

(1) What type of stoppage is this?
(2) What causes this type of stoppage?
(3) What parts have failed to function?

b. After determining the cause, corrective action is taken.

Downloaded from http://www.everyspec.com on 2010-12-20T14:46:53.

Section IV. SPARE PARTS AND ACCESSORIES

16. Spare Parts

Each using unit is provided with a set of spare parts for the 90 mm rifle. These are issued as field replacements for those parts most likely to become worn, broken, or otherwise unserviceable. Requisition parts to keep the set complete. Components of the set are listed in TM 9–1015–223–12.

17. Equipment

a. Tools and material necessary for authorized disassembly, assembly, and maintenance of the rifle are issued with it. Covers and tool rolls are also issued with the rifle. Use these items for prescribed purposes only. This equipment is listed in TM 9-1015-223-12.

b. All new 90mm rifles are equipped with a sound suppressor ring. The purpose of this sound suppressor is to eliminate the telltale ring which is heard when the weapon is hit by a solid object.

Section V. AMMUNITION

18. General Description

Ammunition for the 90mm rifle is issued in complete fixed cartridges. The term "fixed" means that the projectile and the cartridge case are crimped together. This insures correct alinement of the projectile and the cartridge case. It also permits faster loading because the projectile and the cartridge case are loaded as one unit. The rear end of the cartridge case is made of frangible material that is completely destroyed when fired.

19. Care, Handling, and Preservation

Complete rounds are packed individually in moistureproof fiber containers and sealed with tape. Two rounds in containers are packed in a wooden box and weigh approximately 47 pounds. This packaging is designed to withstand normal field use. Since moisture and heat adversely affect ammunition, observe the following precautions:

a. Do not take the sealing tape off the fiber container until the ammunition is to be fired.

b. Protect the ammunition from high temperatures and from direct rays of the sun. **Do not disassemble any part of the round.**

c. Return all unfired rounds to their original containers and mark them. Fire these rounds first in subsequent firing.

d. **Never handle duds** If a projectile is fired and fails to explode, the fuze may be armed. Any movement of the projectile may cause it to explode. In training areas, dud locations are marked and reported to the range officer for destruction.

20. Classification

There-are two authorized rounds for the 90mm recoilless rifle, M67. These are TP M371 and HEAT M371E1. The target practice (TP) round is not standard, but it is available for issue in certain areas. It is ballistically identical to the high explosive antitank (HEAT) round but contains only a small spotting charge as the projectile filler.

21. High Explosive, Antitank, M371El

a. The high explosive, antitank round (fig. 15) utilizes a special fin-stabilized projectile which employs the shaped-charge principle to defeat armor. It does not depend upon velocity at the moment of impact for its effect. It relies upon a concentration of the effect of the explosive filler through its shape. The conical shape of the filler concentrates the force of the explosion into a hot jet that blows its way through the armor. The shape of the filler is maintained by a metal cone which forms a slug when the filler is exploded. This slug or metal may or may not follow the explosive jet through the armor. The complete cartridge weighs approximately 9¼ pounds. The projectile weighs approximately 6¾ pounds, and has a muzzle velocity of approximately 700 feet per second.

b. For maximum effect, the shaped filler must be at exactly the right distance from the face of the armor when it detonates. This distance is called "stand-off." Stand-off is provided by the ogive, or nose spike on the nose of the projectile.

c. The HEAT round is used primarily against armor. It can be used against secondary targets such as gun emplacements and pillboxes with excellent results. The warhead is capable of penetrating the armor of any known tank.

Downloaded from http://www.everyspec.com on 2010-12-20T14:46:53.

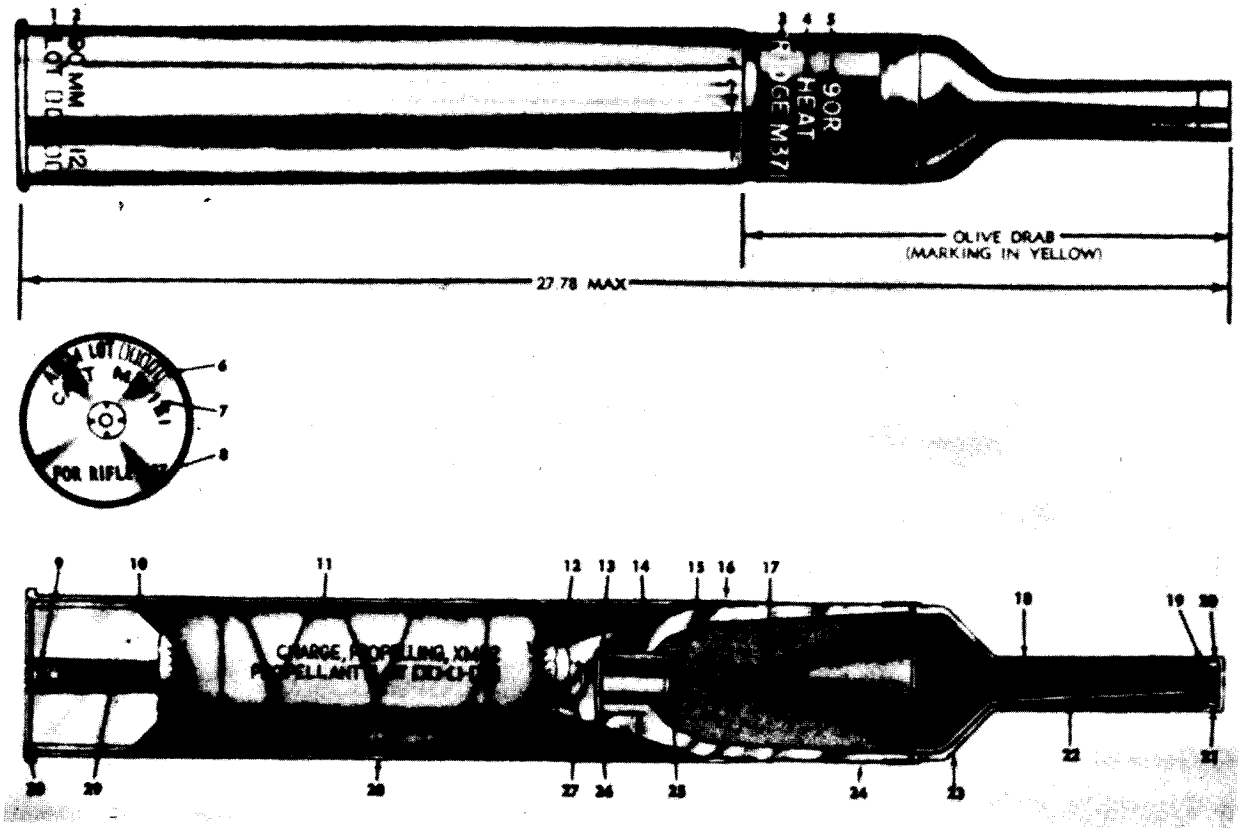

1 Cartridge case lot number
2 Caliber and model of cartridge case
3 Model of cartridge
4 Type of cartridge
5 Caliber and type of weapon
6 Ammunition lot number
7 Model of cartridge
8 Type and model of weapon
9 Percussion primer M78
10 Fin
11 Propelling charge
12 Body adapter
13 Wave washer
14 PIBD fuze M530
15 Bursting charge
16 Rotating band
17 Cone
18 Nose spike
19 Nose cap threads
20 Nose cap
21 Piezoelectric crystal
22 Wire lead
23 Projectile body
24 Bottom section of projectile body
25 Felt pad
26 Insulating disc
27 Tail boom
28 Cartridge case
29 Ignition cartridge
30 Rupture disc

Figure 15. 90mm HEAT cartridge, M371E1.

22. Fuze, PIBD, M530

a. A fuze is a device used with a projectile to explode it at the time and under the circumstances required.

b. The M530 fuze is point-initiating, base detonating with an inertially operated graze system. The fuse is armed by setback forces through a delay system. On impact, a piezoelectric crystal (lucky element) in the nose spike is crushed and generates an electric current that is transmitted by wire to the fuze. The graze system insures detonation regardless of the angle of impact. The M530 fuze is assembled with a booster. Due to its location in the projectile, the fuze is not visible in assembled rounds of ammunition.

23. Subcaliber Device

The subcaliber device (fig. 16) will be locally fabricated from drawings approved by USAMC. This device will permit realistic gunner training at a fraction of the coat necessary when service ammunition is used.

160-412 O-94-2

Downloaded from http://www.everyspec.com on 2010-12-20T14:46:53.

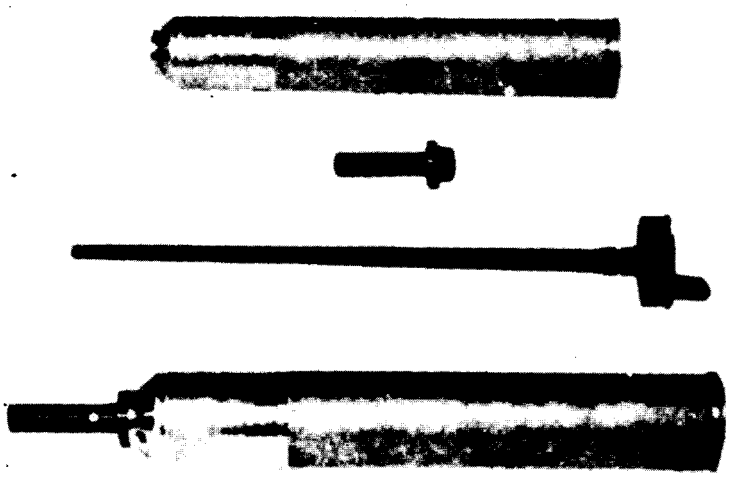

Figure 16. The subcaliber device.

Section VI. MAINTENANCE AND INSPECTION

24. General

a. Preventive maintenance is the systematic care, inspection, and servicing of equipment to maintain it in a serviceable condition, prevent breakdown, and insure maximum operational readiness. First echelon preventive maintenance is accomplished by the equipment operator.

b. The operator's role in the performance of preventive maintenance service is—

(1) To perform service each day the equipment is operated.

(2) To assist the organizational maintenance mechanics in the performance of any other scheduled, periodic services specified by pertinent technical manuals.

(3) To assist the organizational maintenance mechanics in the lubrication of the equipment in accordance with the pertinent lubrication directives.

25. General Procedures for Inspections and Preventive Maintenance

a. Inspections to see if items are in good condition, correctly assembled, secure, not excessively worn, not leaking, and adequately lubricated, apply to most items in preventive maintenance and inspection procedures.

(1) Inspection for good condition is usually by external visual inspection to determine whether the weapon is damaged beyond safe or serviceable limits.

(2) Inspection of a unit to see if it is correctly assembled is usually a visual inspection to see if all parts are present and in their correct, relative position.

(3) Inspection of the weapon to determine if it is secure is usually a visual inspection or a check by hand or wrench for looseness. This type of inspection includes any brackets, lockwashers looknuts, and locking wires, as well as any connecting tubes or wires.

(4) In an inspection for excessively worn components of the weapon it should be determined whether parts of the weapon are worn beyond serviceable limits or to a point likely to result in a failure if the part is not replaced before the next scheduled inspection.

b. For any special cleaning and lubrication instructions required for specific mechanisms or parts see the pertinent section in TM 8-1016-228-12. General cleaning and lubrication instructions are as follows:

(1) Use drycleaning solvent or mineral spirits (paint thinner) to clean grease or oil from all metal parts, except those exposed to powder fouling during firing. This sol-

Downloaded from http://www.everyspec.com on 2010-12-20T14:46:53.

vent will not readily dissolve the corrosive salts from powder and primer compositions.

(2) Use rifle bore cleaner to clean all armament parts which have been exposed to powder fouling during firing. After cleaning a part with rifle bore cleaner it is necessary that the part be wiped dry and oiled.

(3) After all parts are cleaned, rinse and dry them thoroughly. Apply preservative lubricating (PL) (special) oil to all polished metal surfaces, other than optical equipment, to prevent rusting.

(4) When authorized to install new parts remove any preservative materials such as rust-preventive compound or protective grease. Prepare parts as required, and for those parts requiring lubrication apply the lubricant prescribed in the technical manual.

c. General precautions in cleaning are as follows:

(1) Drycleaning solvent and mineral spirits should not be used near an open flame. Fire extinguishers should be provided when these materials are used. Use only well-ventilated areas.

(2) These cleaners evaporate quickly and have a drying effect on the skin. If used without gloves, they may cause cracks in the skin and, in the ease of some individuals, a mild irritation or inflammation.

(3) Avoid getting petroleum products, such as drycleaning solvent, mineral spirits, or lubricants on rubber parts as they will deteriorate the rubber.

(4) The use of diesel fuel oil, gasoline, or benzine (benzol) for cleaning is prohibited.

d. To prevent formation of damaging mildew, shake out and air the canvas cover for several hours at frequent intervals. Have any loose grommets or rips in the canvas repaired without delay. Failure to make immediate repairs may allow a minor defect to develop into major damage. Mildewed canvas is best cleaned with a dry brush. If water is necessary to remove dirt it must not be used until mildew has been removed. If mildew is present, examine the fabric carefully for evidence of rotting or weakening of fabric by stretching and pulling.

26. Lubricating Instructions

a. Usual Conditions.

(1) *Firing handle.* After firing, or every 7 days, disassemble and clean with cleaning solvent; wipe dry and lubricate with PL (special).

(2) *Monopod assembly.* Daily and after firing, wipe dry and coat threaded portion with a light film of PL (special).

(3) *Front bracket assembly.* Before firing, wipe dry and lightly lubricate with PL (special). After firing, or every 7 days, clean with cleaning solvent, wipe dry and lightly lubricate with PL (special).

(4) *Cable assembly.* Before firing remove, wipe dry and lightly lubricate with PL (special). After firing, or every 7 days, remove, clean, wipe dry, and lightly lubricate with PL (special).

(5) *Breech and hinge mechanism group.* Before firing, wipe dry and lubricate tooth on inner hinge portion of the breechblock and all threaded portions of the breechblock with Aircraft Instrument Grease MIL-L-46000. Apply a light coat of PL (special) to all other surfaces. Wipe external surfaces dry before firing. After firing, and on 3 consecutive days thereafter, clean with rifle bore cleaner. After the fourth cleaning, dry and lubricate as above. When the weapon is not fired, disassemble, clean with cleaning solvent; wipe dry and relubricate every 7 days.

(6) *Rear mounting bracket group.* Before firing, wipe dry all parts and lightly lubricate with PL (special). After firing, or every 7 days, clean with cleaning solvent; wipe dry all parts and lightly lubricate with PL (special).

(7) *Tube.* After firing and on 3 consecutive days thereafter, clean bore with bore cleaner. After the fourth cleaning, dry and lubricate bore with PL (special). When weapon is not fired, clean the tube, wipe dry, and reoil every 7 days. Wipe dry before firing.

b. Unusual Conditions. Reduce or increase lubrication intervals as required to compensate for abnormal operation and extreme conditions, such as high and low temperatures, prolonged periods of high rate operation, continued operation in sand or dust, or exposure to moisture. Any one

Downloaded from http://www.everyspec.com on 2010-12-20T14:46:53.

of the above may quickly destroy the protective qualities of the lubricant. Lubrication intervals may be extended during inactive periods.

(1) *Extreme cold weather lubrication.* Apply a light coat of low temperature lubricating oil to the rifle, and move the functioning parts frequently during periods of low temperature to insure proper functioning. In extreme cold weather areas, the weapon must be wiped dry after lubrication so that only a minimum amount of lubricant remains.

(2) *Extreme hot weather lubrication.* Special lubricants will ordinarily not be required at extremely high temperatures because the lubricants prescribed for the weapon provide adequate protection. However, more frequent servicing is necessary because heat dissipates the lubricants.

(3) *Lubrication for humid and salt air conditions.* High humidity, moisture, or salt air tend to contaminate the lubricant, necessitating frequent servicing.

(4) *Lubrication after operation under dusty or sandy conditions.* Thoroughly clean the weapon and lubricate as prescribed in *a* above.

27. Recording Procedures

The equipment record system provides for recording repairs required and accomplished on specific items of equipment. This will include, but is not limited to, adjusting, cleaning, and replacing. Deficiencies discovered before, during, or after operation that cannot be corrected by the operator will be entered on DA Form 2404, Equipment Inspection and Maintenance Worksheet. Deficiencies immediately corrected by the operator are not recorded, except when such correct ions are made by replacing parts, or which constitute repairs above first echelon. Such repairs will be recorded as organizational maintenance.

Section VII. DECONTAMINATION PROCEDURES

28. Preparation and Testing

Oil rifles completely if chemical, biological, or radiological attacks are anticipated. Also oil accessories, except ammunition. Keep ammunition waxed when possible. Test for contamination, using detector paper for liquids or detector crayon for vapors. If equipment is not contaminated, clean and prepare it for use.

29. Decontamination

If equipment is contaminated, decontaminating personnel should use a complete suit of protective clothing (permeable or impermeable), including impermeable gloves and protective mask.

a. Equipment contaminated with chemicals other than the blister agent or G-series agents, is decontaminated by airing. For faster decontamination and to protect against corrosion, clean the rifle and accessories with rifle bore cleaner, denatured alcohol, or soap and water.

b. Equipment contaminated by blister agents is decontaminated as follows:

(1) Remove all dirt, dust, grease, and oil.

(2) Expose all parts to air.

(3) Decontaminate all metal surfaces except the bore with agent, decontaminating, noncorrosive (DANC) (FM 21-40). Hot soapy water is also an effective cleaner.

(4) Protective ointment, M5, can be used for emergency decontamination (FM 21-40).

(5) Test with detector kit to determine if decontamination is complete. If complete, clean, dry, oil, and prepare rifle for use.

(6) Burn, or preferably bury, all rags or wiping materials.

Note. Caution should be used to protect men against vapors created by burning.

c. In general, these actions are applicable to equipment contaminated by biological or radiological attack. Detailed information on decontamination is contained in FM 21-40 and TM 3-220.

Downloaded from http://www.everyspec.com on 2010-12-20T14:46:53.

Section VIII. DESTRUCTION IN EVENT OF IMMINENT CAPTURE

30. Destruction To Prevent Enemy Use

a. General. Destruction of material is accomplished on authority delegated by division or higher commander. This is usually a matter of standing operating procedures. It is ordered only after all measures to save the equipment have been taken.

b. Principles of Destruction.

(1) Methods of destruction are adequate, uniform, and easily followed in the field.

(2) Destruction is as complete as possible within the limitations of time, equipment, and personnel. In any event, the most important parts of the weapon are destroyed or evacuated. The same essential parts are destroyed or evacuated on all like units to prevent the enemy from constructing one complete rifle from several damaged ones.

(3) Crews are trained in prescribed methods of destruction.

(4) Certain methods of destruction require special tools and equipment such as TNT or incendiary grenades. Issue of such special equipment and its use are command decisions and depend on the tactical situation.

c. Destruction of the Rifle.

(1) *Method No. 1—demolition materials.* When planning for simultaneous detonation, prepare the following demolition charge-s using TNT blocks or an equivalent to make up the required charge.

(a) One-pound charge. Insert the charge in the muzzle of the rifle to a distance of about 1 foot. Plug the bore to a distance of about 8 inches with earth, stone, or similar material, being careful not to damage the detonating cord.

(b) Two-pound charge. Insert the charge into the chamber. Pass the detonating cord out of the chamber through one of the vents in the breechblock. Plug the vents with any available material such as rags or mud, being careful not to damage the detonating cord.

(c) Connect the two charges for simultaneous detonation with detonating cord. For complete details on the use of demolition materials and method of priming and detonating demolition charges refer to FM 5–25.

(2) *Method No. 2—burning with incendiary grenades.* Destruction of essential parts followed by burning in an intense fire will usually render the rifle and related material useless. Since the rifle and related material are made almost entirely of metal, effective destruction by this means requires larger amounts of combustible material than may be available. However, the use of incendiary grenades will render the rifle useless.

(a) Insert two incendiary grenades, end-to-end, midway in the tube. Place a third incendiary grenade, fitted with a time blasting fuze, adjacent to the grenades in the tube.

Note. Time blasting fuze burns at a rate of 1 foot in approximately 40 seconds; test before using.

(b) With the breech open, place two incendiary grenades in the chamber. Place a third incendiary grenade, fitted with time blasting fuze, adjacent to the grenades in the chamber.

(c) Ignite the fuzed grenade. The time blasting fuze may be ignited by a blasting fuze igniter or a match. The metal from the grenades will fuze with the tube and will also weld the breechblock and vent bushing.

Note. When fitting incendiary grenades with time blasting fuzes, the fuzes should be of sufficient length so personnel may safely leave the immediate area before the grenades are detonated.

(3) *Method No. 3—by gun fire.* From an adjacent rifle or gun, tire on the rifle and related material to be destroyed. Although one well-placed direct hit may render the rifle and related material temporarily useless, several hits may be required for complete destruction.

(4) *Optical instruments.* Remove the direct fire sight. It is relatively lightweight and easy to carry, and is costly and diffi-

Downloaded from http://www.everyspec.com on 2010-12-20T14:46:53.

cult to replace. It should be evacuated if possible. When evacuation is impractical then smash the sight and mount.

31. Destruction of Ammunition

Ammunition is most effectively destroyed by burning. To accomplish this, stack rounds (either packed or unpacked) in piles, preferably in a trench or depression. Place flammable materials such as paper, rags, and wood around and on the pile. Pour gasoline and oil over the combustible materials and over the entire ammunition pile. Ignite by means of an incendiary grenade fired from a safe distance, a burst from a flamethrower, a combustible train of suitable length, or other appropriate means. *Take cover immediately*.

Downloaded from http://www.everyspec.com on 2010-12-20T14:46:53.

CHAPTER 3

PREPARATORY MARKSMANSHIP

Section I. GENERAL

32. Introduction

a. Preparatory marksmanship training teaches essential skills and develops fixed and correct habits of marksmanship before range practice begins. Thorough instruction and carefully supervised practice in the preparatory phase saves time and ammunition during range firing and develops habits and procedures necessary for well-trained gun crews.

b. Marksmanship and firing explained herein cover both subcaliber and field firing.

33. Sequence of Training

Preparatory marksmanship is divided into steps normally taught in the following sequence:

a. Sighting and aiming.
b. Positions.
c. Adjustment of tire.
d. Trigger mannipulation.
e. Tracking.
f. Examination.

Section II. INDIVIDUAL DUTIES

34. Duties of Squad Leader

The weapons squad leader is in direct command of the crew and is responsible for its equipment. He observes, adjusts, controls, and supervises the conduct of fire of the 90mm rifle. He employs the squad according to orders of the platoon leader and is responsible for properly concealing the weapon. He keeps the platoon leader informed of the status of the ammunition supply and supervises his crew's ammunition resupply.

35. Organization and Equipment for Crew Drill

Crew members	Individual weapon	Individual load
No. 1: Gunner	Pistol	90mm rifle with telescope sight.
No. 2: Assistant gunner (loader ammunition bearer).	Pistol	Ammunition carrying strap, tools, spare parts, cleaning material, and 3 rounds of 90mm ammunition.
No. 3: Ammunition bearer*.	Rifle	Ammunition carrying strap and 4 rounds of 90mm ammunition. 3 rounds in strap and 1 in hands.

**Note.* See current TOE. The third crew member, while not currently authorized, is considered necessary for efficient operations. In the absence of an individual to perform the duties assigned to No. 3, ammunition bearer, No. 2, the loader, will be responsible for these duties too.

36. Duties of Crew Members

a. No. 1, the gunner, lays and fires the 90mm rifle and is the crew leader. He makes necessary fire adjustments as called for by the squad leader. He is responsible for the maintenance of the rifle and coordinates his actions with No. 2.

b. No. 2, the loader, is responsible for loading the 90mm rifle and acts as gunner should the necessity arise. He secures ammunition and checks clearance of the backblast area prior to firing. He

Downloaded from http://www.everyspec.com on 2010-12-20T14:46:53.

assists in the maintenance of the rifle and coordinates his movements and duties with No. 1.

c. No. 3, the ammunition bearer, is responsible for securing ammunition. While not engaged in ammunition resupply, he provides security for the rifle position.

Section III. CREW DRILL

37. General

a. Purpose. The objective of crew drill is to train the individual as a member of the crew to place the rifle in and out of action with precision and speed.

b. Training. The attainment of precision is the first step in developing an expert crew and is acquired by strict adherence to the prescribed procedure. Only after the desired individual precision has been attained are the next phases—teamwork and speed—undertaken.

c. Teamwork. Teamwork is assured by rotation of duties during drill so each crew member, by practice, becomes familiar with the duties of every other member. Continuity of action is made certain by this phase of training.

d. Speed. Practice for speed is instituted as the last phase of instruction in crew drill. Care must be taken during this phase to insure that precision and teamwork are not sacrificed for speed.

38. Forming for Crew Drill

At the command FORM FOR CREW DRILL, members of the crew, except the squad leader, fall in at attention in a column with five paces between men and face the squad leader. To assign positions for crew drill, the squad leader commands COUNT OFF. On that command, the crew calls off from front to rear starting with No. 1 (the gunner).

39. Posting the Squad

At the command POST, all crew members move forward at double time to prone positions directly behind their equipment which is laid out in order.

40. Examine Equipment Before Drill

At the command EXAMINE EQUIPMENT BEFORE DRILL (while crew is in the prone position), crew members examine equipment as follows :

a. No. 1, Gunner.

(1) Checks to see that sight and sight mount are workable, cross level vial is not broken, and sight is clean and tight in the bracket.

(2) Checks the operation of the bipod and the monopod.

(3) Checks the chamber and the functioning of the lockring.

(4) Checks the firing mechanism and the safety lever for proper functioning.

b. No. 2, Loader.

(1) Checks his ammunition for amount and proper seal of the containers.

(2) Checks tools, spare parts, and cleaning material.

c. No. 3, Ammunition Bearer.

(1) Checks his ammunition for amount.

(2) Checks the seals of ammunition containers.

41. Reports

When all equipment is checked, the following reports are given (incorrect items are reported-when a deficiency exists):

a. No. 3, the ammunition bearer, reports AMMUNITION CORRECT.

b. No. 2, loader, reports AMMUNITION, TOOLS, SPARE PARTS, AND CLEANING MATERIAL CORRECT.

c. No. 1, gunner reports ALL CORRECT.

42. Placing Rifle Into Action

To place the weapon into action, the squad leader commands ACTION, and designates by pointing the direction of fire and the general area of the rifle position. He places himself on the flank in a position from which he can observe and control the fire. At the command ACTION, the crew moves rapidly to the position indicated. Where necessary, the squad leader may also indicate the type of position to be taken by No. 1 (prone, sitting).

a. No. 1 selects the exact spot and assumes the firing position from which he can best accomplish his mission. He lays the rifle on the target, places his right hand on the trigger grip, and awaits a report that the rifle is ready to fire. He fires as directed by the squad leader.

Downloaded from http://www.everyspec.com on 2010-12-20T14:46:53.

b. No. 2 assists No. 1 in placing the rifle in action by holding the rifle while the gunner places his body in position or while the gunner adjusts the bipod. He opens the breech. He inserts the cartridge into the chamber and seats it firmly. He then closes and locks the breech and inspects the backblast area to see that it is clear. If it is clear, he rotates the safety arm to the fire position, taps the gunner, and calls UP to indicate that the rifle is ready to fire.

c. No. 3 takes a position on the right flank from which he can readily bring up ammunition and from which he can provide security for the position.

d. After firing, the loader opens the breech with his right hand and ejects the expended cartridge case.

43. Taking the Rifle Out of Action

The squad leader commands OUT OF ACTION. Upon this command, the loader clears the 90mm rifle, calls CLEAR, and closes the breech. No. 2 takes the rifle from No. 1. (When the rifle is fired from the prone position, No. 2 holds the rifle while No. 1 adjusts the bipod for the shoulder carry.) No. 2 now secures his ammunition and tools. No. 3 secures his ammunition. The squad leader indicates the line of march by facing in that direction. The crew places itself in column behind the gunner, and moves on command from the squad leader.

44. Service of the Piece

a. Unloading 90mm Rifle (fig. 17). To open the breech, the loader grasps the lockring handle with his right hand (over the chamber), lifts up on the lockring handle (rotating the breechblock approximately 45° clockwise), and then rotates the breechblock vigorously to the rear.

b. Loading 90mm Rifle (fig. 18). To load the 90mm rifle, the loader inserts a cartridge into the chamber and completely chambers it by sharply pushing the cartridge all the way forward. To close and lock the breech, he grasps the lockring handle with his right hand, moves the breechblock forward until it is seated in the breech, and rotates the lockring counterclockwise until it is fully locked. Upon locking the breech, he inspects the backblast area to see that the area is clear. If the area is clear, he moves the safety arm to the fire position *F* (fig. 19), taps the gunner on the shoulder, and calls UP to indicate to the gunner that the rifle is ready to fire. Figure 19 shows the safety arm in the safe position.

c. Firing. To fire the 90mm rifle, the gunner depresses the trigger grip safety and then the trigger.

d. Clearing the Rifle. The loader opens the breech and checks the chamber to see that the piece is unloaded. He calls 90 CLEAR.

e. Safety. The loader's safety enables the gunner to move with a cartridge in the chamber of the rifle without danger of accidental discharge. The loader, after loading a cartridge, closes the breech without rotating the safety arm to the fire position. In this position, the firing mechanism is mechanically blocked so it cannot be fired. To prepare the 90mm rifle for firing, the loader has only to check the backblast area, rotate the safety arm to the fire position, tap the gunner, and call UP.

Section IV. GUNNER AND ASSISTANT GUNNER TRAINING

45. Sighting and Aiming

a. Aiming for Range.

(1) During the first exercise, a stationary 1,000-inch "A" rifle target (or some other appropriate target) is used as an aiming point. To aim for range, select the correct segment of the vertical line of the reticle and place it on the center of the visible mass of the target.

(2) Find the correct sight picture for each successive 50 meters of range on the reticle. Then progress to sight pictures that require interpolation of range on the reticle; for example, 425 meters, 525 meters. A trained gunner, acting as coach, should check each sight picture when in the prone position.

b. Aiming With Leads.

(1) The reticle is provided with a horizontal scale, graduated in 5-mil (one lead) units, which furnishes a means of applying leads (para 5).

(2) To aim with leads, keep the vertical range line ahead of the center of mass of the target. To hit a target which has lateral movement with respect to the direction

Downloaded from http://www.everyspec.com on 2010-12-20T14:46:53.

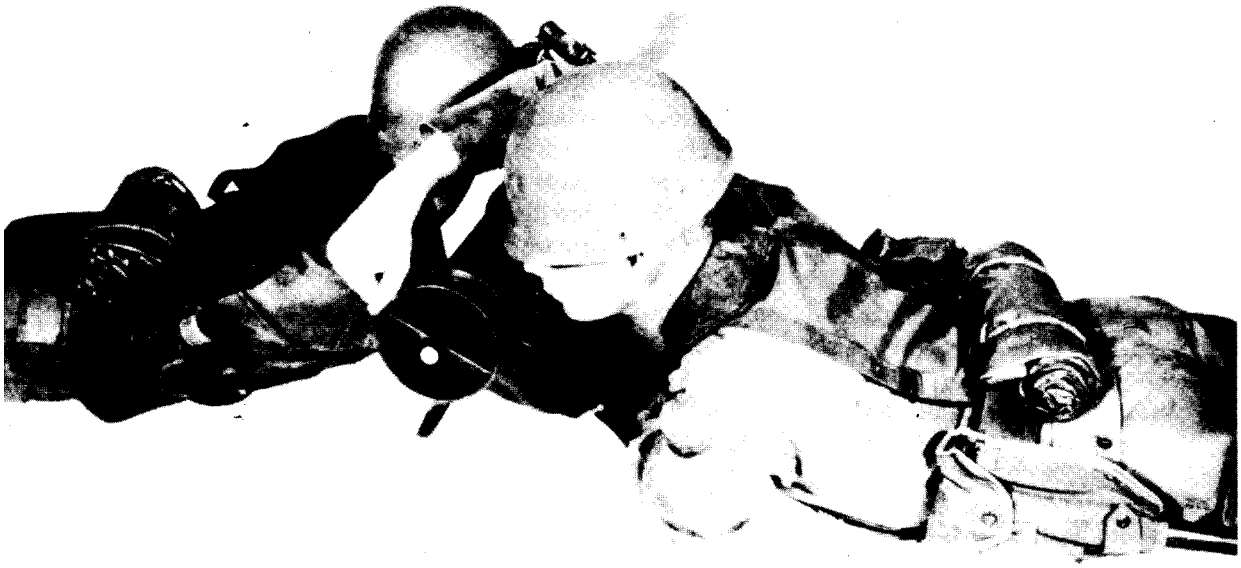

Figure 17. Unlocking and opening the breech.

Figure 18. Loading round in the chamber.

Downloaded from http://www.everyspec.com on 2010-12-20T14:46:53.

Figure 18.—**Continued.**

of fire, point the axis of the bore ahead of the target. Use leads for firing on moving targets. No leads are used for targets moving directly toward or away from the gun position. Aim at the center of visible mass.

(3) Exercises are conducted which require setting announced leads on a subcaliber target (1,000-inch) or some other appropriate aiming point. The target remains stationary, but it is assumed to be at any range from 0 to 600 meters and moving from right or left at speeds requiring variation in the number of leads.

c. Aiming for Range With Leads. Range and leads are combined on the sight reticle by a series of segmented horizontal lines.

(1) Lead lines extend right and left of the vertical range line. Interpolate ranges between the 50-meter intervals etched on the sight reticle. Select appropriate range (this will be imaginary if it is interpolated) and lead on the reticle and project them to the point of intersection. Place this point on the center of mass of the target.

(2) The length of one space or of one line of the horizontal line is equal to one lead. For instance, the point at the end of the first space represents one lead; the point at the end of the second line, four leads (two spaces and two lines). Count off on this line, to the left or right of the vertical range line, the number of leads needed.

(3) Lay the rifle on the target at several different ranges and leads. The target remains stationary, but an assumed range, the direction, and the number of leads are specified in each case. The coach checks each sight picture when in the prone position. Range and leads requiring interpolation are included.

(4) At least one period of this training is devoted to the use of the illuminated reticle. This accustoms personnel to aiming during periods of limited visibility.

46. Position Exercises

Position exercises teach the positions used by the gunner and loader when firing from both ground or shoulder mount at stationary and moving targets. Aiming and servicing the weapon can be included in position exercises. Each crew member is taught to fire the rifle from the prone, sitting, kneeling, standing, and foxhole supported positions. By giving close attention to details during all position exercieas, the crew should be able to

Downloaded from http://www.everyspec.com on 2010-12-20T14:46:53.

Figure 19. Safety arm in safe position.

assume proper positions automatically. For service of the piece, see paragraph 44.

a. General Characteristics of Positions. The following characteristics apply to all firing positions:

(1) Remain steady in each position with a minimum of muscular effort.

(2) In each position, there is some point at which the rifle aims naturally and without effort. If this point is not the center of the target, shift the body to bring the rifle into the correct alinement.

(3) In any firing position except the prone, the gunner may be steadied by the loader.

b. Prone Position.

(1) *Gunner.* Lie on the stomach to the left of the rifle and at an angle of approximately 90° to the piece (fig. 20). With the left hand, grasp the monopod. Place the right hand on the trigger grips by reaching under the tube. To adjust for elevation, screw the monopod up or down. To track a moving target, raise up on the monopod track right or left, allowing the rifle to pivot on the bipod legs.

(2) *Loader.* When loading, assume a prone position (fig. 21) opposite the gunner's right shoulder, perpendicular to the weapon, and facing slightly to the rear. The position must be close enough to the gunner to be able to communicate with him and, at the same time, load the rifle. Move about to conform with the gunner's

Downloaded from http://www.everyspec.com on 2010-12-20T14:46:53.

Figure 20. Gunner in prone position.

movements, to avoid the backblast, and to load the rifle.

c. Sitting Position.

(1) *Gunner.* There are two sitting positions: One for stationary targets and one for moving targets.

(a) To assume the sitting position for moving targets (fig. 22), sit facing the target with legs crossed and feet drawn up under the legs so the outer part of the calf of one leg rests on the inside of the other foot. Bend slightly forward from the hips, and hold the back straight. Grasp the monopod with the left hand. Grasp the trigger handle assembly with the right hand, and hold the right elbow at shoulder level to form a pocket for the bipod shoulder rest.

(b) The sitting position for the stationary target (fig. 23) is similar to the open leg sitting position for firing the M14 rifle. In assuming this position, legs are extended and spread a comfortable distance apart. Brace the legs by digging heels into the ground, toes pointing in, and rest the elbows on the inside of the knees.

(2) *Loader.* The loader takes a kneeling position opposite the gunner's right shoulder and faces to the rear of the rifle (figs. 24, 25). He places one or both knees on the ground. If he places one knee on the ground, it must be the left knee which is nearer to the breech. He places himself close enough to the gunner to communicate with him and at the same time load the weapon. As in the other position, the loader moves about while tracking to conform with the movements of the gunner, and to load the weapon.

Figure 21. Loader in prone position.

Downloaded from http://www.everyspec.com on 2010-12-20T14:46:53.

Figure 22. Gunner in sitting position for moving target.

Figure 23. Gunner in sitting position for stationary target.

Downloaded from http://www.everyspec.com on 2010-12-20T14:46:53.

Figure 24. Loader's position, left knee on the ground.

d. Kneeling Position.

(1) *Gunner.* There are two kneeling positions, one for stationary targets and one for moving targets.

(a) To assume the kneeling position for moving targets (fig. 26), the gunner kneels on his right knee with the upper part of the right leg vertical. His buttock does not rest on his right heel. He points his leg toward the target with his left foot at a right angle to the knee and opposite his right knee. His left leg forms a right angle to the ground. Holding his body erect, he places his left elbow under the piece. He grasps the monopod with the left hand, grasping the trigger grips with his right hand. He holds his right elbow high, forming a pocket for the bipod shoulder rest.

(b) The kneeling position for the stationary target (fig. 27) is similar to the kneeling position for firing the M14 rifle. The gunner kneels on his right knee at a 90° angle with the line of aim, sits so the center of his right buttock rests directly on his right heel, and shifts his weight forward so his heel inclines in the direction of the target. When viewed from the front, his left leg is vertical; however, it need not appear vertical when viewed from the side. The gunner may prefer to draw his left foot back, relaxing his body weight forward so a solid contact is made between his calf and thigh. He points his left foot in the direction which gives him the most comfort, rests his left upper arm or left elbow on his left knee, and places his left and right hands as prescribed for the sitting and standing positions. He raises his right elbow to the height of (or slightly above) his shoulder, forming a pocket for the bipod shoulder rest.

(2) *Loader.* The loader takes the same position as explained in *c* (2) above.

Downloaded from http://www.everyspec.com on 2010-12-20T14:46:53.

Figure 25. Loader's position, both knees on the ground.

e. Standing Position.

(1) *Gunner.* The standing position is similar to the standing position for firing the M14 rifle (fig. 28). To assume the standing position, the gunner stands half-faced to the right with his feet a comfortable distance apart and his body erect and well balanced. He grasps the monopod with the left hand and the trigger grips with the right hand. He raises his right elbow to the height of (or slightly above) his shoulder, forming a pocket for the bipod shoulder rest. To traverse in this position, he moves his body from the ankles up.

(2) *Loader.* The loader takes a standing position opposite the gunner's right shoulder. The loader faces the rear of the rifle, close enough to the gunner to communicate with him and, at the same time; load the weapon. As in the other positions, the loader moves about while tracking to conform with the movements of the gunner, and to load the weapon. The loader may assist in steadying the gunner by grasping him around the chest or waist (fig. 29).

f. Foxhole Supported Position.

(1) *Gunner.* The foxhole supported position is similar to the standing position except that the gunner faces directly to the front, and the monopod rests on the ground (fig. 30).

(2) *Loader.* The loader faces the rear of the rifle and adjusts his position as the gunner tracks a target or otherwise moves the rifle. The loader must pay particular attention to the backblast area while in this position. **It is extremely important that the breech of the rifle clears the rear edge or parapet of the foxhole.** It may be necessary to use sandbags in front and/or in the bottom of the foxhole to obtain the required breech clearance.

Downloaded from http://www.everyspec.com on 2010-12-20T14:46:53.

Figure 26. Gunner's kneeling position, moving target.

47. Adjustment of Fire

a. General. After crew members are familiar with the use of the sight and have had training in techniques of fire, they are ready for simple exercises in adjustment of fire. Each should practice the method described below.

b. Burst-On-Target.

(1) Use a 1,000-inch target and announce a range to use for the initial lay of the weapon. Show the burst of a round on the face of the target, using a burst marker on a pointer. Location of the burst should be over or short.

(2) Have students and coaches mentally note the location of the burst on the sight reticle. Remove the burst marker from the face of the target and have students move the "remembered" burst to the center of mass of the target.

48. Breathing

a. Accurate fire requires proper breathing. If the gunner's chest and back are moving, he does not keep his eye in the same position with reference to the sight, and the sight picture seems to move. Constant practice in proper breathing is necessary until the gunner automatically holds his breath correctly when firing the weapon.

b. To prevent breathing from interfering with his sight picture, the gunner initially takes a breath of air, lets out a portion of it, then holds the remainder naturally. If the gunner does not fire within a reasonable length of time (8 or 9 seconds), he does not attempt to fire, but relaxes, takes several breaths, and again attempts to fire. Constant practice is necessary to control breathing without discomfort.

c. To check the gunner for proper breathing, watch his back. If it rises and falls as he aims, he is not breathing properly. If the rifle is being fired from the shoulder and the muzzle of the rifle seesaws, the gunner is breathing improperly.

49. Trigger Manipulation

a. One of the most important elements of marksmanship training is manipulation. Everything

160-412 O-94-3

Downloaded from http://www.everyspec.com on 2010-12-20T14:46:53.

Figure 27. Gunner's kneeling position, stationary target.

about the position and aiming may be perfect, but unless the trigger is manipulated properly, the weapon will be pulled to the left or right. Although jerking the trigger may appear to disturb the sight only slightly, the slightest movement spoils a good shot. A more extensive movement, made in anticipation of firing, is called flinching. It occurs only if the gunner knows the exact moment when the rifle will fire. The gunner should manipulate the trigger so he does not know the exact moment the 90mm rifle will fire.

b. The gunner takes a breath, expels part of it, and locks in the rest with his throat muscles. He then alines the sight on the target and depresses the trigger safety with the crotch of the hand between the thumb and index finger. He exerts a slight initial pressure on the trigger, then continues to squeeze with a steady, smooth pressure to the rem. He holds the correct sight picture, squeezes the trigger, and continues to hold the trigger briefly after the round is fired. If this procedure is followed, each round fired comes as a surprise to the gunner, thereby eliminating flinching. Constant practice of trigger manipulation under the observation and supervision of a good coach greatly improves accuracy.

c. Important points about trigger manipulation:

(1) Depress the trigger safety before putting any initial pressure on the trigger.
(2) Apply smooth, steady pressure on the trigger straight to the rear.
(3) Do not wait too long to fire a round.
(4) Concentrate on the sight picture rather than the right hand.
(5) Every shot must come as a surprise to the gunner.
(6) Do not "snap shoot" because it will exaggerate flinching.

50. Tracking

When proficiency is obtained in sighting and aiming, positions and trigger manipulation training in tracking a moving target begins. This training progresses from simple tracking to moving objects at 25 meters to more difficult exercises of tracking moving targets under field conditions.

Downloaded from http://www.everyspec.com on 2010-12-20T14:46:53.

Figure 28. Gunner in standing position.

Downloaded from http://www.everyspec.com on 2010-12-20T14:46:53.

Figure 29. Gunner in standing position and supported.

Downloaded from http://www.everyspec.com on 2010-12-20T14:46:53.

Figure 30. Foxhole supported position.

Any expedient can be utilized in the preliminary phases. When tracking under field conditions, combat vehicles such as tanks or trucks are used.

51. Examination

a. General. Before commencing range firing, examine personnel to determine whether they have achieved the desired standard of proficiency. Correct deficiencies, as determined by the examination, with additional training. Use either written, oral, or proficiency-type examination. The proficiency-type examination should be used whenever possible.

b. Written Examination. Use the objective-type written examination and include questions concerning all the steps of marksmanship.

c. Oral Examination. An oral examination, conducted as a question and answer period, consists of objective-type questions. These questions should be broad in scope, requiring some explanation and discussion by the soldier.

d. Proficiency Examination. Conduct a proficiency examination using the "county fair" method (AR 320-5). Setup various stations with specific requirements at each station.

(1) *Sighting and aiming station.* At this station, an assistant instructor gives the students various sight picture situations and then checks each sight picture for accuracy. He also gives the students a problem that requires a change from the initial sight picture to simulate adjusting fire and the receipt of a subsequent fire command.

(2) *Position station.* An assistant instructor requires the students to assume the various positions acceptable for the gunner and loader for firing the 90mm rifle.

(3) *Safety station.* An assistant instructor requires the student to explain the mechanical safety features of the weapon and the range and safety regulations (90mm backblast).

(4) *Other stations.* Stations for examining trigger manipulation and breathing may also be conducted. Any other stations desired may be used, but definite requirements must be established at each station.

Downloaded from http://www.everyspec.com on 2010-12-20T14:46:53.

Section V. RANGE PROCEDURES AND SAFETY

52. Training Procedure

a. During all instructional firing, emphasis should be placed on rapid adjustment of fire and a target hit with the second round as a minimum goal.

b. During the initial phases of instruction firing, the officer conducting the firing may, at his discretion, reduce the speed of the target and the number of cartridges fired in each run. The object of this is to increase the man's confidence and place emphasis on manipulation and accuracy.

c. All exercises are fired in the order listed in the tables (chap. 4) and are controlled by appropriate fire commands.

d. Moving target firing is preceded by one or more dry runs during instruct ion firing.

e. All 90mm rifles are inspected by a qualified individual before and after each firing to make sure the rifle has the correct adjustment, is clean and free from excessive wear, and operates properly.

f. Instructor insure that no part of any person's body is behind the breech of the rifle when a live cartridge is in the 90mm chamber. The loaders, in particular, are cautioned to keep their arms from moving behind the breech during firing.

g. Extreme caution must be exercised in opening the breech of any rifle which fails to fire. Danger of accidents is greatest at this time. After the rifle is cleared, it will be inspected by a qualified individual to determine the cause of the failure. *Do not use a rifle that has failed to fire until it has been examined and approved by a qualified individual.*

53. Officer in Charge

The officer in charge—

a. Assigns, coordinates, and supervises the firing line.

b. Organizes the range.

c. Determines which position is to be used in firing each table.

d. Issues fire commands and general instructions to the firing line.

e. Enforces safety precautions prescribed in AR 385-63.

f. Decides whether an alibi run should be authorized in the event of breakage or stoppage in the range apparatus.

54. Scoring Personnel

Scoring personnel detailed to supervise record firing are normally from organizations other than the one firing. Before record firing, they familiarize themselves thoroughly with firing procedures and the following specific duties:

a. Issue scorecards.

b. Check scoring spaces.

c. Inspect each target before firing to insure that it contains no unpasted shot holes.

d. Count number of rounds of ammunition fired by the gunner for each exercise.

e. See that firing is conducted in accordance with prescribed procedure.

f. Decide whether misfires and malfunctions of the rifle are the fault of the firer.

g. Score the targets on each exercise fired and record the score.

55. Coaches

During all instruction firing, a coach is at each rifle to instruct and assist the gunner; however, no coach is present at the rifle for the record firing. The loader is present at all firings. The coaches—

a. Require each gunner and loader to observe all safety precautions and see that they comply with instructions pertaining to the service of the weapon.

b. Supervise the work at the weapon and make sure the commands are executed properly. Repeat orders and instructions when necessary to insure correct understanding and timely execution.

c. Report all misfires, malfunctions, or discrepancies to the officer conducting the firing.

d. Critique the firing.

56. Loader

The primary duty of the loader is to service the 90mm rifle during all firing exercises. During record firing, the loader does not coach or instruct the gunner in any way. He—

a. Loads the 90mm rifle in accordance with the commands of the officer conducting the firing.

b. Taps the gunner and reports UP when the weapon is loaded and he is clear of the breech, and the backblast area is clear.

c. Signals READY to the officer conducting the firing.

d. Repeats all orders to unload, cease fire, and clear the weapon.

Downloaded from http://www.everyspec.com on 2010-12-20T14:46:53.

e. Announces to the gunner the number of rounds to be fired in each exercise, and sees that the correct number of rounds are available.

57. Organization

a. See figure 31 for organization of the firing line.

b. See paragraphs 53 through 56 for duties of personnel.

c. No personnel except those actually required on the firing line are allowed to enter the fenced or roped-off inclosure at any time.

d. Before firing, each 90mm rifle is checked by a qualified individual to insure that it is in firing condition.

58. InstructionFiring

a. Before firing, the officer in charge of firing gives a description of the range and announces specific instructions pertaining to firing procedure.

b. Rifles are numbered from right to left.

c. The coach, loader, and gunner take positions at the rifle. The gunner tests the firing mechanism, bipod legs, and monopod; the loader obtains necessary ammunition.

d. When all rifles are prepared for firing and the observance of safety regulations is checked, the officer conducting firing gives the fire command.

e. At the completion of an exercise the officer conducting the firing commands CEASE FIRING. The loader rapidly unloads the rifle and makes certain that all personnel are standing clear of the rifle, and then raises his arm to signal the officer in charge that the position is clear.

59. Stationary and Moving Target Exercises

a. An example of the sequence of the fire command for stationary target firing is as follows: FIRE MISSION, FRONT, TARGET, HUNDRED. When all rifle positions have signaled READY, the officer conducting the firing commands FIRE. Each gunner fires as directed until his ammunition is expended or until the command CEASE FIRING is given.

b. An example of the sequence of a fire command for moving target firing is as follows: LAY ON AIMING STAKE. When all rifles are laid on the aiming stake, the fire command continues as follows: MOVING TARGET, LEFT FRONT, TANK, _____ HUNDRED, TWO LEADS, FIRE. The loader loads on the ammunition element of the fire command. When the target completes its run, the command CEASE FIRING is given.

60. Record Firing

The same procedure as that prescribed for instruction firing is employed for record firing, except as noted below:

a. Each man completes the prescribed instruction firing for the course specified before record firing.

b. Unless the allotted time for firing is limited, record firing does not occur the same day that any portion of instruction firing occurs.

c. Before firing any exercise for record, the gunner is given a reasonable length of time to check the condition of the weapon, sights, and ammunition.

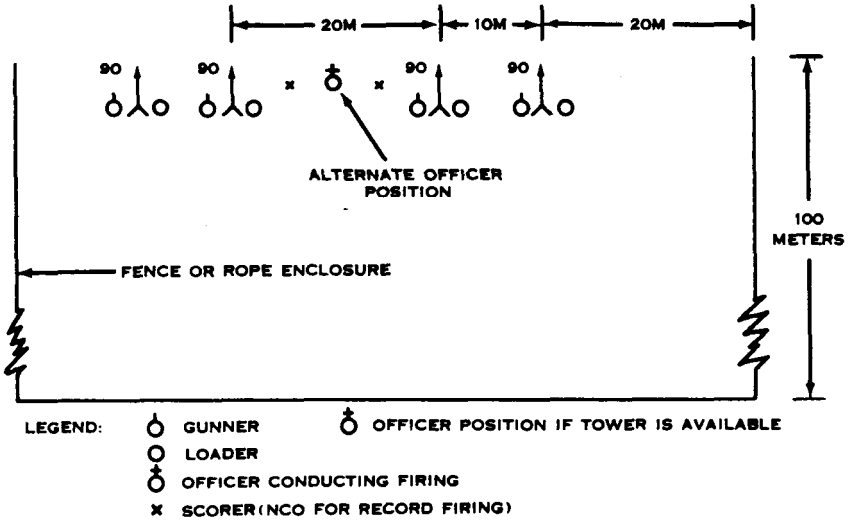

Figure 31. Range organization.

Downloaded from http://www.everyspec.com on 2010-12-20T14:46:53.

d. The gunner boresights or zeros his own weapon before record firing.

e. The target speed and the allotted time are designated to each gunner before firing.

f. In record firing, when a misfire, stoppage, or malfunction occurs, the gunner or loader holds up his hand and calls MISFIRE. Thereafter neither the loader nor gunner touches the rifle until the scorer examines it.

g. If a misfire, stoppage, or malfunction occurs through no fault of the gunner, the score is disregarded and the gunner is permitted to refire the exercise.

h. Decisions to disregard scores or to authorize refiring of portions of the course rest with the officer in charge.

i. If a misfire or malfunction is clearly the fault of the gunner, he is not permitted to refire that portion of the course.

61. Scoring an Individual for Qualification

a. A departure from the mandatory provisions of this course disqualifies the firer involved.

b. After a man has started an exercise, all rounds fired by him count as part of the exercise.

c. A gunner is given credit for only those hits that strike the correct target or scoring space.

d. A hit is scored for each bullet hole found in a target or scoring space, except that no more than the prescribed number of shots are counted. In field service firing, observation of the strike on the target counts as a hit. The target does not have to be marked.

e. For 25-meter firing, the name of the gunner is placed on each target before firing. Except under the supervision of the scorer, no person handles any target until it has been scored.

f. A bullet hole that touches the outer line of a scoring space is classed as a hit. A bullet hole cutting or touching the line between two scoring spaces receives credit for the higher value score.

g. For moving target firing, ammunition not fired during the exposure time of this target is forfeited.

h. Holes made by ricocheting bullets, rocks, or other foreign matter are not counted.

i. Each individual entry for record practice is made on the scorecard in ink or indelible pencil and is authenticated by the scorer. Erasures are not permitted; only the scorer can make alterations and these must be initialed by him.

62. Safety Precautions

a. Because of the danger to personnel from the backblast of recoilless weapon, exercise extreme care in all phases of instruction. Emphasize this danger during the earliest stages of training. Conduct all crew drills, position exercises, tracking exercises, and subcaliber firing as though service ammunition is being fired.

b. The backblast area is pentagonal in shape (fig. 32) with the apex at the breech. It extends 140 feet to the rear and has a 180-foot base, 90 feet on either side of the bore axis extended. It is divided into two areas: A danger area and a caution area. In the danger area, which extends 90 feet to the rear of the breech, serious casualties or fatalities are likely to occur due to blast and flying debris. In the caution area an individual is relatively safe providing he does not face the breech. This area extends an additional 50 feet to the rear of the danger area. It is habitually kept clear during training situations.

c. Do not fire the 90mm rifle from confined spaces such as dugouts or rooms. Structural damage to the inclosure may occur and occupants might be injured by falling debris. Severe concussion and concentration of toxic gases may result. There is also danger of starting a fire.

d. Most conventional weapon emplacements are unsuitable for this weapon. Any emplacement where there is an obstruction too near the breech is unsuitable since the obstruction may deflect the concussion toward the crew. The most suitable emplacements are those which leave the rear of the rifle exposed (or semiexposed) with no obstruction behind the breech, and which provide cover for operating personnel on either side of the rifle.

e. If the 90mm rifle has been subjected to continuous firing for a considerable length of time, the tube and chamber will become overheated. The heat of the rifle could possibly cause the propellant to ignite. An ignition under such circumstances is called a cookoff. Cookoffs normally occur between 10 to 30 seconds after a cartridge has been loaded into a hot chamber. If a misfire occurs while the tube is hot, all personnel must stay clear of the muzzle and backblast danger area until the rifle is cool, after which the cartridge will be removed.

f. Because of the possibility of a hangfire or a

Downloaded from http://www.everyspec.com on 2010-12-20T14:46:53.

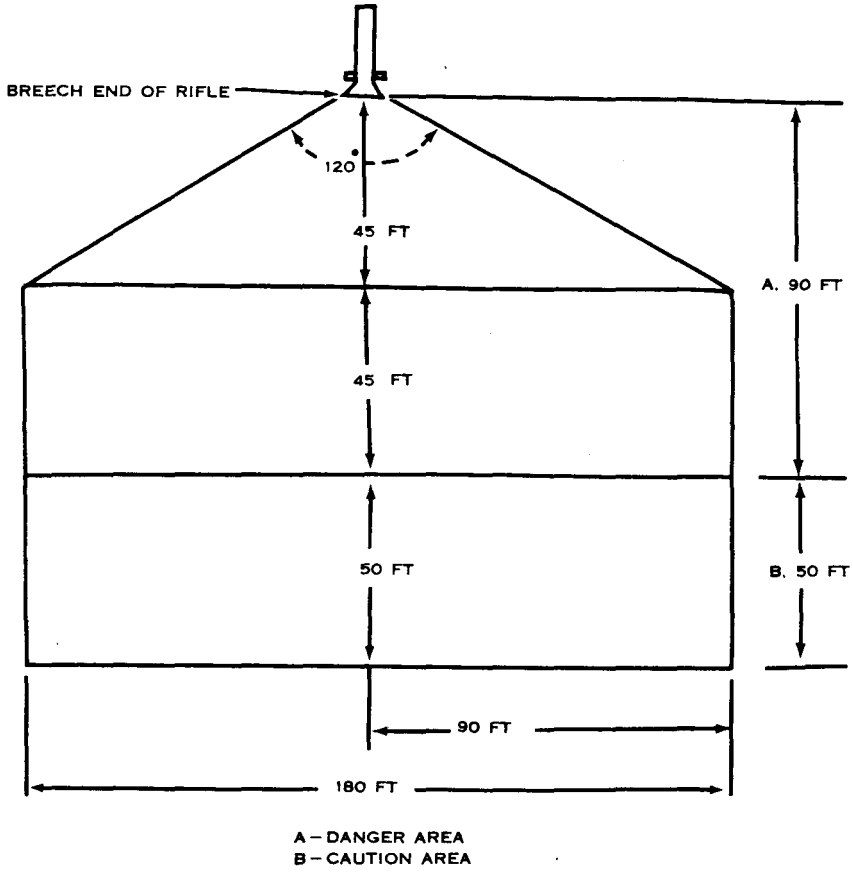

Figure 32. Backblast area.

cookoff, the following immediate action procedures will be observed when a misfire occurs with the 90mm rifle:

(1) Keep the weapon aimed at the target and keep all personnel clear.

(2) Wait 1 minute and recock the weapon and attempt to fire again.

(3) If the rifle does not fire a second time, wait one more minute and remove the round. Check the primer for an indent from the firing pin; however, if an indent is present the cause of the malfunction is in the round and it must be destroyed according to unit SOP. If the primer is not indented, examine the rifle to determine the cause of the malfunction. Be careful that the round does not drop on the ground.

g. Do not disassemble ammunition at any time.

h. Comply with safety instructions in AR 385-83.

i. When firing service ammunition, the weapon may become dangerous to touch because of heat after two or three rounds. Be careful not to touch the tube.

j. When firing from the prone position, the crew should have their shirt or jacket collars turned up and the top buttons fastened. This will afford protection to the neck from foreign material thrown up by the backblast.

Downloaded from http://www.everyspec.com on 2010-12-20T14:46:53.

CHAPTER 4

MARKSMANSHIP TRAINING

Section I. GENERAL

63. Introduction

Field firing develops individual proficiency and teamwork for all phases of combat. The unit is conducted through a series of exercises simulating battlefield conditions as nearly as possible. The situation for each exercise is given by the instructor who acts as umpire. Unit commanders direct and control their units in the actions required. At the completion of each exercise, a critique is held by the umpire.

64. Exercises

Where possible, the terrain is varied for each exercise so the unit is presented with a new situation. The following paragraphs are given as a guide for the preparation of such exercises.

65. Direct Fire

a. Purpose. To give the squad leaders practice in control of their units as they engage various types of targets. Direct fire teaches members of the crew selection of positions, use of individual cover and concealment, ammunition supply, and technique of fire.

b. Unit. One 90mm rifle crew.

c. Situation. Crew is located in an assembly area and is issued ammunition. The squad leader is given pertinent portions of an operation order to include position areas, sectors of fire, and location of friendly troops.

66. Method

The squad leader selects his route of approach and his crew's position. He issues necessary orders to place the crew in action. When a target is indicated, the squad leader issues fire commands, opens fire, and adjusts the fire. Neutralization fire is not a part of these exercises. As soon as the fire of the crew has been adjusted, duties of individuals in the crews are rotated and a new target is designated. The squad leader is prepared at any time to displace forward to an alternate or supplementary position or to withdraw to a covered area.

67. Critique

At the completion of each exercise, the instructor conducts a critique covering the following points (care is taken by the officer conducting the critique to avoid confusing effectiveness of fire with overall unit performance):

a. Reconnaissance.
b. Actions and orders of unit leaders.
c. Suitability of observation posts.
d. Suitability of firing positions.
e. Suitability of alternate positions.
f. Use of cover and concealment.
g. Technique of fire.
h. Ammunition resupply plans.

Section II. QUALIFICATION AND FAMILIARIZATION FIRING

68. Qualification Courses

Three qualification courses are prescribed for the 90mm rifle. These courses consist of various combinations of the tables outlined in paragraph 69. The course used will normally be determined by the facilities available.

a. Fundamentals. Fundamentals emphasized in the qualification courses are:

Downloaded from http://www.everyspec.com on 2010-12-20T14:46:53.

(1) Rapid estimation of range, apparent speed, and leads.
(2) Rapid and accurate firing of the initial round.
(3) Rapid and accurate adjustment of fire.
(4) Rapid engagement of successive targets.

b. Conduct of Fire. For safety precautions, range procedures, and operational instructions, see chapter 3.

c. Courses of Fire. The courses of fire are organized as shown below.

Table	Course A [1] Instruction record		Course B [2] Instruction record		Course C [3] Instruction record		Instruction course (modified)
I	Fired once	Not fired	Fired once	Not fired	Fired twice	Fired twice	Fired once.
II	Fired once	Not fired	Fired once	Not fired	Fired twice	Fired twice	Not fired.
III	Fired once	Fired once	Fired once	Fired twice	Not fired	Not fired	Fired once.
IV	Fired once	Fired once	Fired once	Fired twice	Not fired	Not fired	Not fired.
V	Not fired	Fired once	Not fired	Not fired	Not fired	Not fired	Not fired.
VI	Not fired	Not fired	Not fired	Not fired	Not fired	Not fired	Fired once.

[1] Used if facilities are available for service firing.
[2] Used if midrange subcaliber range is available, but service range facilities are not.
[3] Used if neither midrange subcaliber nor service range facilities are available.

d. Qualification Scores.

	Course A	Course B	Course C
Expert	210-260	320-400	315-380
First classgunner	185-209	280-319	270-314
Second class gunner	160-184	240-279	230-269
Unqualified	Below 160	Below 240	Below 230

e. Scorecard. DA Form 2974-R, Individual Scorecard 90mm Recoilless Rifle (fig. 33) will be reproduced locally on 8" x 10½" paper.

69. Tables

Table I. 25-meter subcaliber firing—stationary target

Trial	Number of rounds	Time (seconds)	Maximum score
1	5	75	25
2	5	75	25
3	5	75	25
4	5	75	25
	20		100

Note. The number of rounds fired in this table may be reduced at the discretion of the officer in charge of firing.

a. Table I.

(1) Instructions for firing table I.

(a) Target layout consists of five 1,000-inch "A" rifle targets for each firing point. Targets are emplaced 1 meter apart and 50 centimeters off the ground (fig. 34).

(b) Zero the rifle at 25 meters using any desired range line, but insure that all rifles on the firing line are zeroed with the same range line.

(c) This table is fired from the prone position.

(d) Use 7.62mm ball ammunition onlv.

(2) Procedure for officer in charge of firi;g,

(a) During instructional firing, the officer in charge of firing announces TIME at the end of the prescribed time. He does not command CEASE FIRE until all gunners have completed firing.

(b) During record firing, the officer in charge of firing commands CEASE FIRE at the end of the prescribed time.

(c) Hits on the 1,000-inch "A" rifle target are given the numerical value as shown on the target.

Table II. 25-meter subcaliber firing, moving target (level track)

Trial	Number of rounds	Time exposed (sec)	Target speed (cm/sec)	Maximum	
				Leads	Score
1	3	60	20	0–1–2	15
2	3	60	20	0–1–2	15
3	3	50	25	0–1–2	15
4	3	50	25	0–1–2	15
5	3	40	30	0–1–2	15
6	3	40	30	0–1–2	15
	18				90

Downloaded from http://www.everyspec.com on 2010-12-20T14:46:53.

INDIVIDUAL SCORECARD 90MM RECOILLESS RIFLE (FM 23-11)

DATE: 12 Sept.

NAME: John R. Smith | GRADE: E-5 | ORGANIZATION: TSB DETZ, 2nd STU BN

TABLE I (Course A)

Trial	Possible	Instruction Score	Record Score
1	25	25	
2	25	25	
3	25	20	
4	25	25	
Total		95	

TABLE II (Course A)

1	15	15	
2	15	10	
3	15	15	
4	15	15	
5	15	10	
6	15	15	
Total		80	

TABLE III (Course A)

1	10	5	10
2	10	10	10
3	10	10	10
4	10	5	5
5	10	5	10
6	10	10	10
7	10	10	10
8	10	5	10
9	10	10	5
10	10	10	10
Total		80	90

TABLE IV (Course A)

Trial	Possible	Instruction Score	Record Score
1	10	10	10
2	10	5	10
3	10	5	10
4	10	5	10
5	10	10	10
6	10	10	5
7	10	10	5
8	10	5	10
9	10	10	10
10	10	5	10
Total		75	90

TABLE V (Course A)

1	20	20	20
2	20	10	20
3	20	20	20
Total		50	60

Table	Instruction Course A	Instruction Course B	Instruction Course C	Record Course A	Record Course B	Record Course C
I	95			XXX		
II	80			XXX		
III	80			90		
IV	75			90		
V	50			60		
Total	380			240		

Signature of Firer: John R. Smith

Signature of Officer: Harvey Green

Signature of Scorer: John Jones

Date: 12 Sept 64

DA FORM 2974-R

Figure 33. Scorecard.

Downloaded from http://www.everyspec.com on 2010-12-20T14:46:53.

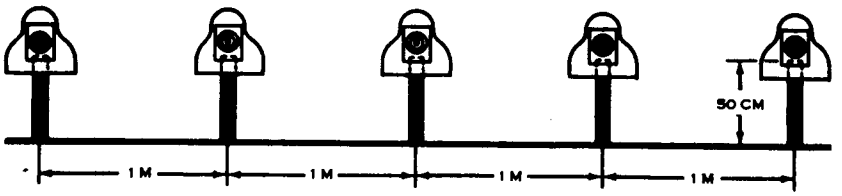

TARGET STAKES ARE MADE OF ANY SUITABLE SIZE LUMBER. A PRONE "F" SILHOUETTE TARGET IS TACKED TO THE TOP OF EACH STAKE. 1,000-INCH "A" RIFLE TARGETS ARE PASTED ONTO THE SILHOUETTE TARGETS.

Figure 34. Target array for table I.

b. Table II.

(1) Instructions for firing table II.

(a) The standard A-22 subcaliber target is used in firing this table (fig. 35). It may be modified by painting over the scoring spaces. A scoring template is then required.

(b) Scoring templates may be locally fabricated.

(c) Zero the rifle in the same manner as in table I.

(d) This table is fired from the kneeling position.

(e) Use 7.62mm ball ammunition only.

(f) Gunner fires one round at each tank in the following order: Top, center, and bottom as target moves in either direction. He uses zero leads when firing at the top tank; one lead when firing at the center tank; and two leads where firing at the bottom tank. Gunner fires on the left vertical column of tanks

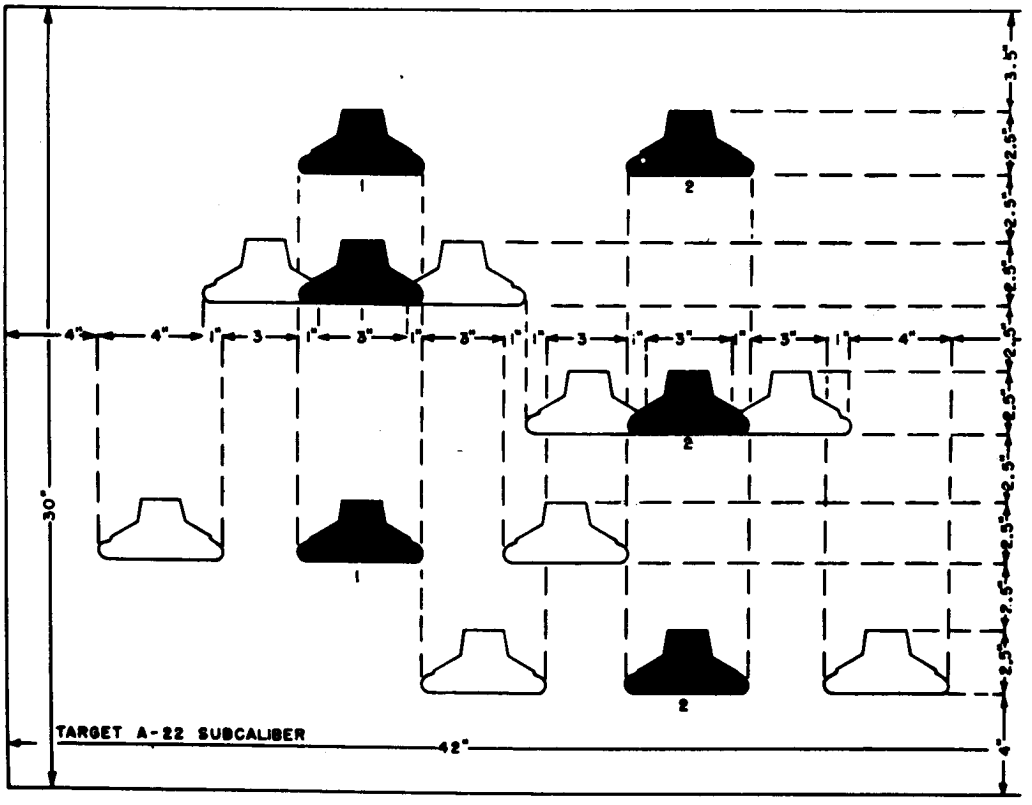

Figure 35. Moving target 25-meter subcaliber firing.

Downloaded from http://www.everyspec.com on 2010-12-20T14:46:53.

when the target is moving right to left, and on the right column when target is moving left to right.

(2) Procedure for officer in charge of firing.

(a) The command CEASE FIRE is given at the end of the prescribed time during both instructional and record firing.

(b) Score five points for each hit in a scoring space; but do not score more than three hits in each top silhouette and three hits in each scoring space.

c. Table III.

(1) Instructions for firing table III.

(a) Targets should be spread laterally in at least a 30-degree fan. Targets should be arranged at random in depth at ranges varying from 200 to 450 meters.

(b) Target panels must have a 10-foot (3-meter) or 20-foot (6-meter) horizontal dimension. Bunker targets may be any-size.

Table III. Midrange subcaliber firing, stationary target, unknown range

Trial	Maximum number of rounds	Range (meters)	Target	Maximum score
1	2	200–450	Panel	10
2	2	200–450	Panel	10
3	2	200–450	Panel	10
4	2	200–450	Panel	10
5	2	200–450	Bunker	10
6	2	200–450	Panel	10
7	2	200–450	Panel	10
8	2	200–450	Panel	10
9	2	200–450	Bunker	10
10	2	200–450	Panel	10
	20			100

(c) Zero the rifle at a known range between 400 and 450 meters.

(d) This table is fired from the prone position.

(e) Use 7.62mm tracer ammunition only.

(f) Gunner estimates range to each panel target by use of stadia lines. Gunner estimates range to bunker targets by eye and by noting location in relation to panel targets already engaged.

(g) Gunner attempts to achieve a first round hit on each target. In the event of a miss, he fires a second round using the burst-on-target method of adjustment.

(2) Procedure for officer in charge of firing.

(a) Scorers should have binoculars.

(b) Number of rifles firing at any given time should be controlled so that a scorer need watch only one weapon at a time.

(c) Score 10 points for a first round hit; six points for a second round hit; and zero points if both rounds miss.

(d) In the event of a first round hit, a second round will not be fired.

Table IV. Midrange subcaliber firing, moving target, known range

Trial	Maximum number of rounds	Target km/hr	Speed mph	Leads (perpendicular track)	Maximum score
1	2	16	10	4	10
2	2	16	10	4	10
3	2	24	15	6	10
4	2	24	15	6	10
5	2	16	10	4	10
6	2	16	10	4	10
7	2	24	15	6	10
8	2	24	15	6	10
9	2	16	10	4	10
10	2	16	10	4	10
	20				100

d. Table IV.

(1) Instructions for firing table IV.

(a) If possible, use a tank as the target.

(b) A diagonal track is preferable to a perpendicular track. When a diagonal track is used, the number of leads will be reduced.

(c) Zero the rifle at a known range between 400 and 450 meters.

(d) This table is fired from the foxhole supported position.

(e) Use 7.62mm tracer ammunition only.

(f) Gunner attempts to achieve a first round hit on each target run. In the event of a miss, he fires a second round using the burst-on-target method of adjustment.

(2) Procedure for officer in charge of firing.

(a) Scorers should have binoculars.

Downloaded from http://www.everyspec.com on 2010-12-20T14:46:53.

(b) Each scorer should be required to score a maximum of two firing points at any given time.

(c) Officer in charge of firing should announce the range to each end of the moving target track.

(d) Score 10 points for a first round hit; 6 points for a second round hit.

Table V. Service firing, stationary target, unknown range

Trial	Maximum number of rounds	Range	Maximum score
1	2	150–300	20
2	2	250–400	20
3	2	350–450	20
	6	----------	60

e. Table V.

(1) Instructions for firing table V.

(a) Targets may be log and sandbag bunkers, panels, or tank hulls. It is important that each target has a 10-foot (3-meter) or 20-foot (6-meter) horizontal dimension.

(b) Boresight the rifle in the normal fashion.

(c) This table is fired from the prone position.

(d) Either HEAT or TP ammunition may be used.

(e) Gunner attempts to achieve a first round hit. In the event of a miss, he applies burst-on-target and fires a second round.

(2) Procedure for officer in charge of firing.

(a) Scorers should have binoculars.

(b) Each scorer should be required to score a maximum of two firing points at any given time.

(c) Score 20 points for a first round hit; 12 points for a second round hit: zero points if both rounds miss.

Table VI. Service familiarization

Trial	Number of rounds	Range (meters)
1	1	200–300
2	1	250–350
3	1	300–400

f. Table VI.

(1) Instruction for firing table VI. This table is fired in the same manner as table V except that only one round is fired at each target, regardless of results.

(2) Procedure for officer in charge of firing. This table is not scored.

Downloaded from http://www.everyspec.com on 2010-12-20T14:46:53.

CHAPTER 5

TECHNIQUE OF FIRE

Section I. GENERAL

70. Definitions and Scope

a. Terms.

(1) *Technique of fire.* Placing effective fire on a target.

(2) *Direct laying.* Pointing a weapon for direction and elevation by laying on a target visible to the gunner as he looks through the sight.

(3) *Direct fire.* Firing conducted when the gunner is using direct laying.

b. Scope. Training in marksmanship is a prerequisite for instruction in direct laying. Direct laying involves a knowledge of the following subjects:

(1) Characteristics of fire.

(2) Range, apparent speed, and lead determination.

(3) Fire commands.

(4) Fire control.

71. Characteristics of Fire

a. Trajectory.

(1) The trajectory of a projectile is the curve traced by the center of gravity of the projectile in its flight from the muzzle of the gun to the point of impact. A knowledge of the trajectory is important, especially in firing antitank weapons and when firing over the heads of friendly troops.

(2) The 90mm rifle is classified as a flat trajectory weapon. The muzzle velocity and the weight of the projectile are the more important factors in determining the flatness of the trajectory. In all cases, however, due to the action of the force of gravity and air resistance, the trajectory of projectiles is actually a curve and not a straight line. Air resistance retards the projectile during its flight, causing the angle of fall to be greater than the angle of elevation. Therefore, the projectile reaches its maximum ordinate (highest point) closer to the point of impact than to the rifle (fig. 36).

(3) A line tangent to the trajectory at the point of impact is called the *line of fall.* The vertical angle between the line of fall and the ground at the point of impact is called the *angle of fall.*

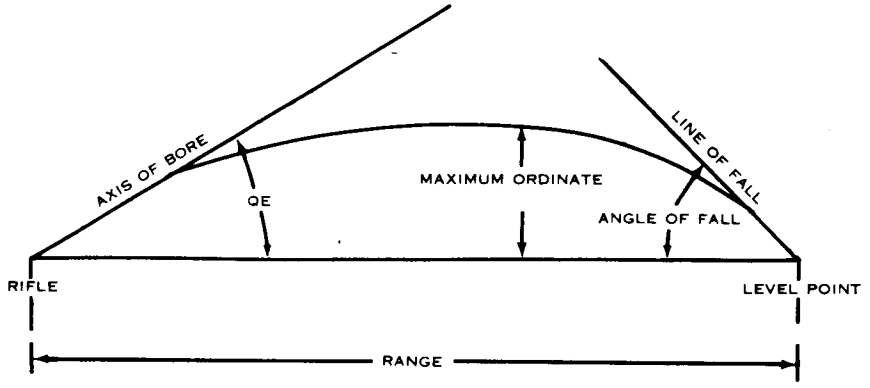

Figure 36. Elements of trajectory.

Downloaded from http://www.everyspec.com on 2010-12-20T14:46:53.

b. Dispersion.

(1) When firing a large number of rounds from a rifle having elevation, direction, and other conditions as nearly identical as possible, the points of impact of the projectile are scattered both in range and deflection. This scattering is called *dispersion.* The greatest concentration of points of impact is near the center of the group. Approximately as many points fall short of the center as fall beyond, and a few will fall to the right or to the left.

(2) Among factors that cause dispersion are variations in weight and composition of the propellant, weight and balance of the projectile, and atmospheric condition.

c. Dispersion Rectangle and Probable Error. In general, the points of impact of projectiles fired from a rifle, using the identical sight picture for each cartridge fired, may be included in a rectangle with its longer axis along the gun-target line. This is called a *dispersion rectangle.* If this rectangle is divided into eight equal parts by lines drawn perpendicular to the line of fire, the percentage of points of impact to be expected in each part is as shown in figure 37. Notice that each of the two segments nearest the center of the dispersion rectangle contain 25 percent of all impacts. The length (in the direction of fire) of each of the segments of the dispersion rectangle represents one range probable error. The value in meters of one range probable error, which varies with the range from the rifle to the center of impact, is given in the firing table pertaining to the type of ammunition being fired.

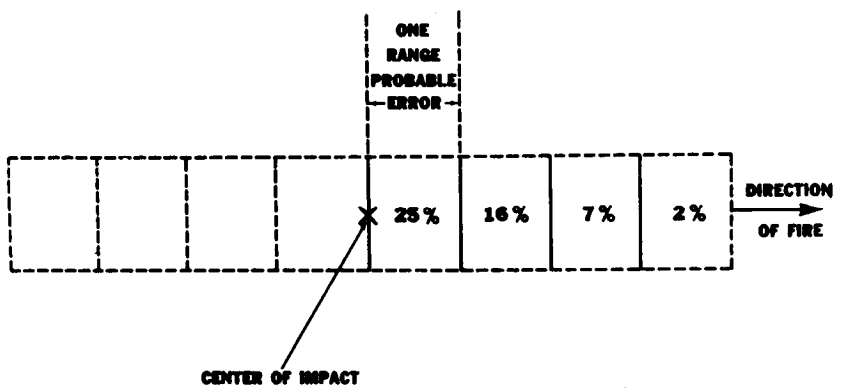

Figure 37. Dispersion rectangle.

Section II. RANGE DETERMINATION, AND ESTIMATING LEAD AND APPARENT SPEED

72. Range Determination

a. General.

(1) Ability to accurately estimate range is essential to achieve first round hits. The length of time available to fire is in many cases limited; therefore, quick and accurate determination of range is extremely important.

(2) The methods used to determine range to a given target are:

(a) Using stadia lines in the sight reticle.
(b) Using map distance.
(c) Estimating by eye.
(d) Obtaining the range from other units.
(e) Firing other weapons.
(f) Measuring ground distmce.
(g) Using binoculars.

b. Stadia Lines. The stadia lines in the sight reticle are a readily available means of estimating range (fig. 38). These lines are developed from the mil relation formula and are designed to enable the gunner to estimate range to targets having a 10- or 20-foot dimension. Most tanks are approximately 10 feet wide and 20 feet long. To

Downloaded from http://www.everyspec.com on 2010-12-20T14:46:53.

estimate range, the gunner adjusts the lay of the rifle until the target exactly fits between the stadia lines. The point on the vertical (range) line of the reticle, that corresponds to the center of mass of the target, indicates the range. The target in figure 38 is at a range of 275 meters. On targets showing more of the flank than the front, a full stadia picture is used. If more of the front than the flank is shown, a half stadia picture is necessary (fig. 39). It is important to remember that a deflection adjustment must be made from a half stadia picture to obtain the correct sight picture for target engagement.

c. Map Distance. Accuracy of determining range from a map depends on skill in map reading and the accuracy of the map (FM 21–26).

d. Estimating Range by Eye. See FM 23-71 for explanation.

e. Obtaining the Range From Other Units. Often, a unit relieved from a combat position possesses range cards and other information that may be of use to the relieving unit. Also, other units of the same organization as the relieving unit may have the desired information. This latter source of information is usually reliable, especially if the unit has previously engaged targets in the area.

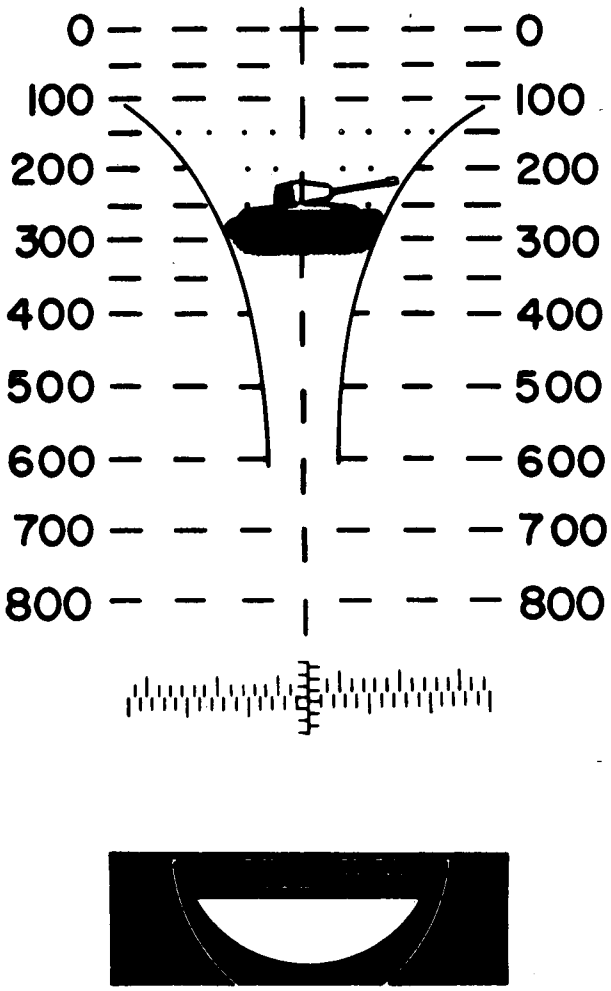

Figure 38. Full stadia picture.

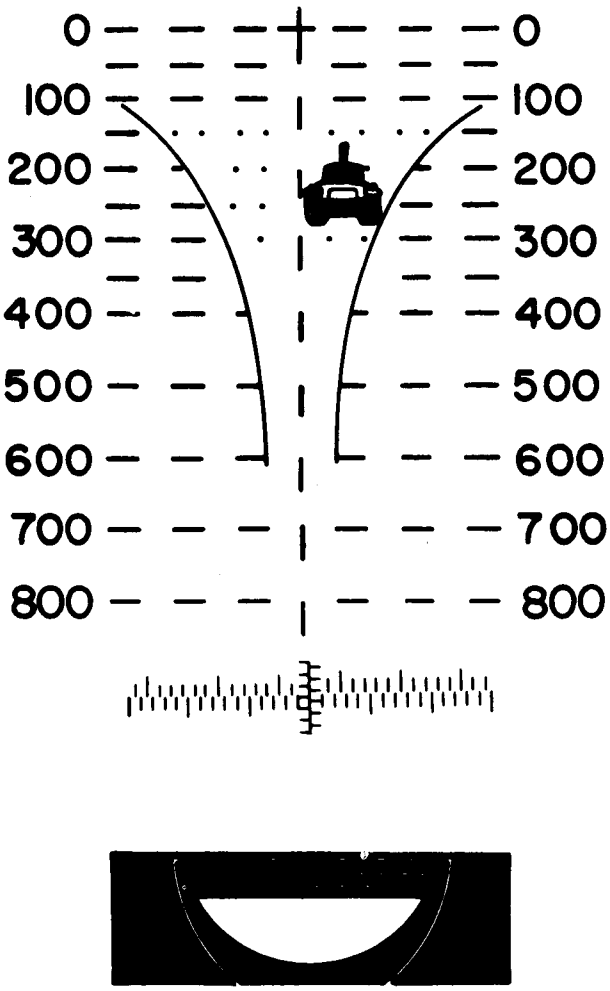

Figure 39. Half stadia picture.

Downloaded from http://www.everyspec.com on 2010-12-20T14:46:53.

In many cases, other weapons have been fired at targets near the target being engaged by the 90mm rifle, and their range data may be useful in determining the desired range.

f. Firing Other Weapon. You may use the fire of other weapons to determine range. The fire of smaller individual weapons, such as the M14 rifle using tracer ammunition, does not disclose the position as readily as do larger type weapons and is effective to ranges of approximately 500 meters.

g. Measuring Ground Distance. If the situation permits freedom of movement, pace off the distance or measure it with tape or speedometer.

h. Using Binoculars. Binoculars, used in conjunction with the mil relation (WORM) formula, are useful in determining ranges. To use this method, select a house, door, window, highway, or a telephone pole—something which has a known size or can be closely estimated. Using the mil scale in the binoculars, measure the height or width of the object. Then substitute in the mil relation formula: $R = \frac{W}{m}$, where R equals range in thousands of meters, m equals width in mils, and W equals width of the object in meters.

73. Determining Leads

The primary method of determining leads for the 90mm rifle is as follows:

a. Estimate apparent speed of the target.

b. Convert the apparent speed to leads.

74. Apparent Speed Estimation

The speed at which a target seems to move toward or away from the line of sight is called apparent speed. It is determined by establishing a line of sight and then estimating the target's speed as it moves toward or away from this line of sight. In figure 40, tank A has no apparent speed no matter how fast it is moving because it is moving directly toward the gunner. The same applies if the tank is moving directly away from the gunner. Tank B has an apparent speed equal to its actual

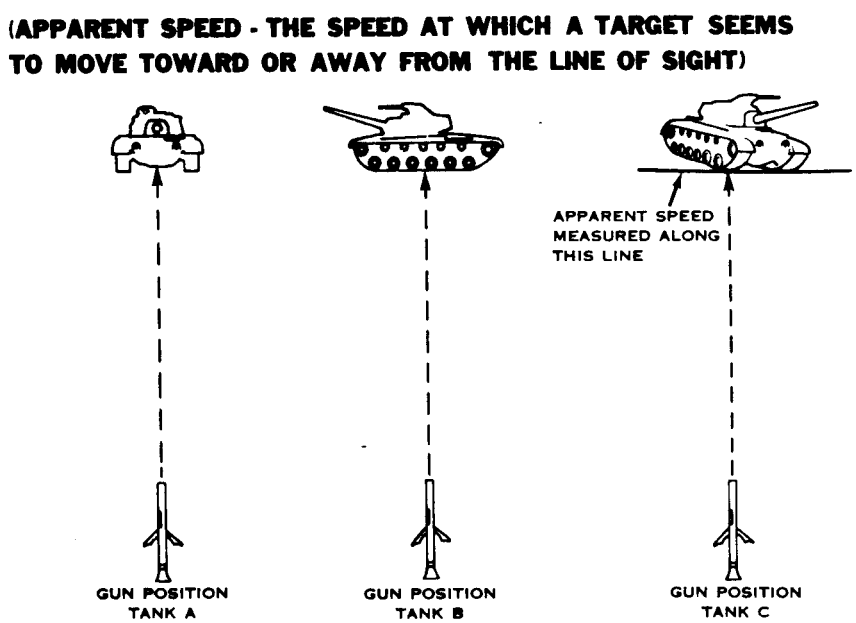

Figure 40. Determining apparent speed.

Downloaded from http://www.everyspec.com on 2010-12-20T14:46:53.

speed, because it is moving perpendicular to the gunner's line of sight. Tank C, moving at the oblique, has an apparent speed less than its actual speed. Constant practice is the only method by which the gunner can acquire proficiency in estimating apparent speed.

75. Lead Estimation

a. A moving target is led by the distance it travels from the time the rifle is fired until the projectile crosses the path of the target. Angular leads are measured with the direct fire sight M103, 5 mils being equal to one lead. The number of leads applied varies with the apparent speed of the target, but not the range.

b. Ballistic characteristics of the 90mm rifle are such that one lead is applied on the sight reticle for each 2½ miles per hour of apparent speed of the target.

c. An alternate means of determining leads is the common lead rule. The number of leads required is determined by the direction the target is moving in relation to the gun position (fig. 41). Target speed is assumed to be 15 miles per hour. If the target is moving directly toward or away from the gun position, no leads are required. If the target is moving from 1 or 11 o'clock, two leads are used; from 2 or 10 o'clock, four leads; and from 3 or 9 o'clock, six leads.

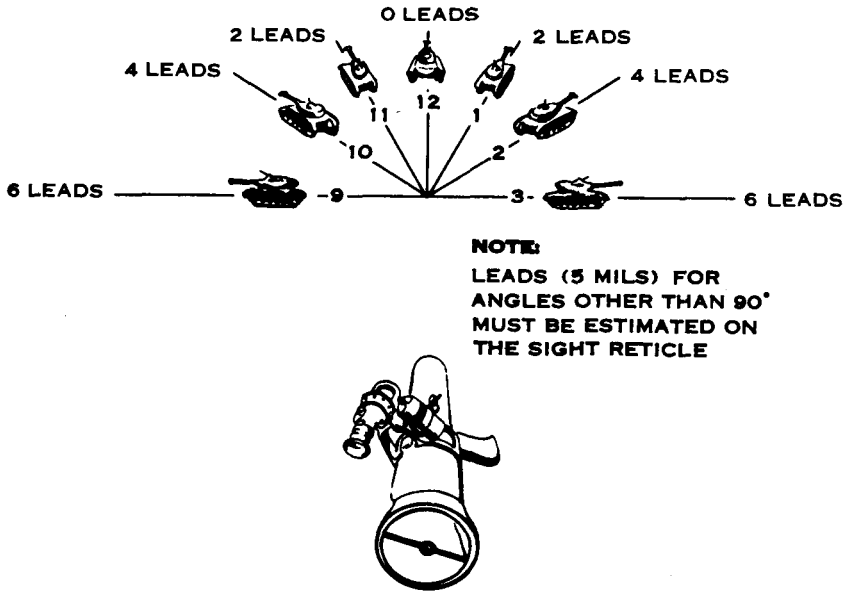

Figure 41. Common lead rule.

Section IV. FIRE COMMANDS

76. General

a. Fire commands are instructions issued to enable a weapons crew to engage a target. The squad leader normally issues the fire commands. In some cases, however, the time element involved may require the gunner to issue an abbreviated command. In either case, a standard sequence is followed (para 78).

b. Training in fire commands is designed to develop squad proficiency to such a degree that all fire after the initial shot can be adjusted without command from the squad leader, until the target is destroyed or the squad leader decides to resume adjustment.

c. There are two kinds of fire commands: initial and subsequent. Initial fire commands include all data necessary for laying, loading, and firing the rifle. Subsequent fire commands include those

Downloaded from http://www.everyspec.com on 2010-12-20T14:46:53.

commands issued to adjust, shift, cease, or suspend fire. They normally include only those elements necessary to accomplish these actions.

d. A correct fire command is as brief as clarity permits. It includes all the elements needed to accomplish the fire mission and is given in logical sequence to accustom the crew to executing instructions in a definite order. It is transmitted at a rate that permits receipt and application of instructions without confusion. Any unnecessary elements are omitted.

e. Fire commands are usually given orally. When oral delivery is not practicable, they may be transmitted by telephone, radio, messenger, or arm-and-hand signals worked out with the crew.

f. Numbers are announced as illustrated in the following examples:

10	ONE ZEREO
25	TWO FIVE
300	THREE HUNDRED
475	FOUR SEVEN FIVE

g. When the squad leader issues fire commands, the gunner repeats all commands except when firing at a moving target.

77. Sequence of Initial Fire Commands

a. Sequence. The following sequence is prescribed for the initial fire command. Any of these elements that do not pertain to a specific fire command are omitted.

(1) Alert.
(2) Type of ammunition.
(3) Direction.
(4) Target description.
(5) Range.
(6) Leads.
(7) Control.

b. Alert. The alert is always the first element of the initial fire command. It consists of the command FIRE MISSION in the case of a stationary target or the command MOVING TARGET in the case of a moving target. The alert puts the rifle crew in readiness to execute a fire command with the least practicable delay.

c. Ammunition. This element may be omitted unless TP ammunition is to be fired. When this element is omitted, HEAT will be loaded as soon as the alert is given.

d. Direction. Direction may be given either orally, by pointing, or by a combination of these two methods. The squad leader may use a reference point in designating those targets that are difficult for the gunner to locate. The clock system of indicating direction may also be used.

e. Target Description. Targets are described as quickly and simply as is consistent with clarity. The squad leader uses the following word or words to designate targets:

Any tank	TANK
Any unarmored vehicle	TRUCK
Personnel	TROOPS
Automatic weapon	MACHINEGUN
Any antitank or artillery piece	ANTITANK
Any other target	Briefest descriptive form.

If several targets are in view, he designates the particular target or part of target to fire on; for example, LEADING TANK or LAST TRUCK.

f. Range. Range is announced in meters (estimated or determined) either orally or by signals.

g. Leads. This element has application only in the case of moving targets. Leads are announced in units of 5-mil angular leads, as: TWO LEADS, or THREE AND ONE-HALF LEADS.

h. Control. This element is given as FIRE, or when a short delay is necessary, AT MY COMMAND. This is followed at the desired time by the command FIRE.

78. Examples of Initial Fire Commands

a. Stationary Target at 400 Meters.

FIRE MISSION
HEAT
RIGHT FRONT
TANK
FOUR HUNDRED
FIRE

b. Moving Target at 300 Meters and 15 Miles Per Hour Apparent Speed.

MOVING TARGET
HEAT
FRONT
TANK
THREE HUNDRED
SIX LEADS
FIRE

Downloaded from http://www.everyspec.com on 2010-12-20T14:46:53.

c. Examples of Initial Fire Commands When the Gunner is Issuing the Command.

MOVING TARGET
HEAT
LEFT FRONT

Note. The gunner issues only those elements that affect other members of the squad.

79. Subsequent Fire Commands

a. Sensing. In direct fire, sense each burst for deflection and range. Do not announce either sensing. See paragraph 89 for a discussion of sensing and conduct of fire.

b. Elements. Elements of a subsequent fire command generally include only those elements in which there is a change from the previous fire command. Range and control elements are always included.

c. Announcing Subsequent Fire Commands. Give subsequent commands as corrections to the previous sight picture. Use the following terms to announce these corrections:

Fire at the same range---	REPEAT RANGE
Increase range----------	ADD
Decrease range----------	DROP
Move the burst or strike to right-----	RIGHT
Move the burst or strike to left----	LEFT
Increase leads ----------	MORE
Decrease leads----------	LESS

80. Corrections

a. Deflection. When firing on stationary targets, give corrections in deflection (in mils) as RIGHT FIVE, LEFT ONE ZERO. When deflection is correct, omit this element from subsequent fire command.

b. Range. Always include this element in the subsequent fire command. If a correction is needed announce it as ADD ONE HUNDRED, DROP FIVE ZERO. If the range is correct, give this element as REPEAT RANGE.

c. Leads. When firing at moving targets, give the correction leads as TWO MORE, ONE LESS. Include this element in subsequent fire commands only when necessary.

81. Subsequent Fire Commands for Stationary Targets When the Squad Leader Is Adjusting the Fire

a. LEFT TWO ZERO
DROP ONE HUNDRED
FIRE

b. RIGHT FIVE
ADD ONE HUNDRED
FIRE

c. REPEAT RANGE
FIRE

82. Subsequent Fire Commands for Moving Targets When the Squad Leader Is Adjusting the Fire

a. DROP ONE HUNDRED
ONE LESS
FIRE

b. ADD ONE HUNDRED
TWO MORE
FIRE

c. REPEAT RANGE
ONE LESS
FIRE

83. Gunner's Subsequent Commands

When the gunner issues the initial fire command and adjusts his own fire, there is no subsequent fire command. It is desirable that all subsequent fire adjustments be made by the gunner in order to save time. When such adjustments are being made, firing continues uninterrupted until the mission is accomplished.

84. Repeating and Correcting Commands

a. Repeating. If the loader or gunner fails to understand any element of the fire command, he requests a repetition of that element by announcing DEFLECTION, RANGE, or AMMUNITION. He uses a rising inflection in his voice to denote a question. When any crew member asks that an element be repeated, misunderstanding is avoided by prefacing the repeated element or elements with the phrase THE COMMAND WAS _____. This phrase is used only when repeating an element of an unexecuted fire command.

b. Corrections. In all initial fire commands, correct or erroneous command by saying CORRECTION, and give the new command. To correct an erroneous range command of 200 meters to 300 metes, the procedure is: CORRECTION, THREE HUNDRED, FIRE. *(NOTE* that the corrected initial fire command is followed by the

Downloaded from http://www.everyspec.com on 2010-12-20T14:46:53.

command to FIRE.) To correct an error in a subsequent fire command, the observer says CORRECTION and repeats the entire subsequent command correctly.

85. Cease Firing

CEASE FIRING is announced when the squad leader desires to interrupt firing for any reason. It indicates the completion of firing with the data in the gunner's possession. Firing is then renewed by an initial fire command. SUSPEND FIRING is the command for a temporary halt in firing a particular mission. Given COMMENCE FIRING after SUSPEND FIRING, the crew continues to fire the mission under the previous fire command.

86. Termination of Alert

To allow the crew to relax between missions so its response to subsequent alerts is more complete, termination of the alert is announced as CEASE FIRING, END OF MISSION. If oral commands are not practicable, appropriate (arm-and-hand) signals may be used.

Section V. FIRE CONTROL

87. General

Fire control implies the ability of a leader to open fire at the instant he desires, adjust the fire of his rifle or rifles upon the target, shift fire from one target to another, regulate the rate of fire, and to cease firing at will. A leader must accomplish these promptly if the fire is to be effective. Lack of good fire control results in loss of surprise effect, premature disclosure of position, and fire on unimportant targets. It also results in a loss of time in securing adjustment and a waste of ammunition. Fire control depends on thorough discipline, technical training, and the initiative of crew members. Because of noise, semi-isolation of firing position limited vision, and fleeting opportunity, fire control must be simple to insure effective execution of the mission and the engagement of new and unexpected targets.

88. Chain of Fire Control

The commander responsible for employment of the rifle issues the necessary orders directly to the platoon leader. The platoon leader, in turn, gives his orders to his squad leaders. The squad leader is responsible for the ultimate control of the crew and the accomplishment of its mission.

89. Adjustment of Fire

a. General.

(1) Adjustment of fire is one of the most important phases of fire control. If first round hits are not achieved during firing, rapid adjustments of fire are made with subsequent rounds.

(2) Target misses are sensed prior to issuance of subsequent corrective fire adjustments. The term *sensing* means that the person controlling the fire of the weapon notes where the projectile bursts in relation to the target. His sensing includes both range and deflection observations. After the observer has made his sensing, he determines the corrections necessary to obtain a target hit, and gives the appropriate subsequent fire command. For example, if the miss was sensed 10 mils to the left and 100 meters over the target the correct subsequent fire command would be-

RIGHT ONE ZERO
DROP ONE HUNDRED
FIRE

b. Burst-On-Target Method.

(1) This method is primary with the 90mm rifle. It may be used up to the maximum range graduation of the sight reticle. With a well-trained gunner, it is the most accurate and rapid system of fire adjustment. The gunner has complete control over the adjustment of his fire. This system cuts the time lag between firing, and eliminates time required for the observer to sense the burst and formulate and issue a subsequent fire command. It also eliminates time required by the crew to interpret and execute the command.

(2) The burst-on-target method is based on the fact that the rifle is boresighted. As long as this condition exists, the burst of each round fired at a given range will ap-

Downloaded from http://www.everyspec.com on 2010-12-20T14:46:53.

pear on the same place in the sight reticle. If the gunner moves the point-of-burst on the sight to the center of mass of the target, a hit will be obtained with the next round.

(3) In using the burst-on-target method, the gunner makes his own sensings and then applies the corrected data to the rifle. The squad leader, after issuing the initial fire command, remains silent. He is ready, however, to take over if the gunner needs help or if the gunner cannot see the burst-on-target relationship through the sight. In this case, the squad leader issues normal subsequent commands to adjust the fire. The gunner uses a sight picture for his initial firing from the elements of the squad leader's initial fire command.

FIRE MISSION
HEAT
FRONT
TANK
TWO HUNDRED
FIRE

(a) The gunner fires the rifle and, while the projectile is on the way to the target, he checks his sight picture and makes any corrections necessary because of the movement of the weapon when fired.

(b) He notes the point on the sight reticle where the burst appears and moves this point onto the center of mass of the target.

(c) He again fires. This should give him a target hit; if not, he applies the same principle and fires again; this time he should have a target hit.

(4) The most difficult step to achieve in the burst-on-target method is the movement of the burst point to the target. The burst indication is either a puff of smoke or a cloud of dust which settles rapidly. The gunner chooses some mark on his sight reticle in the center of burst before the burst indication disappears. He then moves that exact point to the center of mass of the target to fire his subsequent round. In selecting this point, the gunner chooses a lead line, a range graduation, or interpolates between lines. A failure to hit with the second round normally indicates an inaccurate movement of the center of burst. Should the gunner fail to achieve a hit with his second round, he repeats the process moving the new center-of-burst to the center of the target by manipulation of the bipod or moving the rifle right or left, whichever the case may be.

90. Neutralization Fire

The squad leader or gunner may desire to place a number of rounds on the target to destroy or neutralize it. Because of the ammunition resupply problem, he does *not* command FIRE FOR EFFECT. He estimates the number of rounds needed for neutralization or destruction checks the ammunition on hand, and issues a subsequent fire command for each additional cartridge to be fired. Example: REPEAT RANGE, FIRE.

Section VI. BORESIGHTING

91. General

Accurate marksmanship with the weapon requires accurate boresighting. Improper boresighting or zeroing results in an inability to hit the target. To aline the axis of the 90mm bore (extended) and the telescopic line of sight, converge both on some distant aiming point beyond 500 meters.

92. Procedure

a. Four notches, 90° apart, are located on the muzzle end of the 90mm rifle. Place two pieces of thread or some similar material across opposite notches. The point of intersection marks the axis of the bore at the muzzle end of the weapon.

b. Insert a boresight disc, issued with each weapon, in the chamber to determine the axis of the bore at the breech.

c. In the event the boresight disc is not available, insert the breechblock into the chamber, after removing the firing pin, so the axis of the bore at the breech is defined by the firing pin hole in the breechblock.

Downloaded from http://www.everyspec.com on 2010-12-20T14:46:53.

d. Select an aiming point beyond the range to any likely target. With the eye held several inches behind the breech, aline the axis of the bore on the aiming point by elevating and traversing the rifle.

e. Look through the telescope and insure that the boresight cross of the sight reticle is alined on the same aiming point. If the boresight cross is not alined, bring it to the aiming point by rotating the elevation and azimuth correction screws with the screwdriver end of the combination wrench. Recheck the alinement through the bore and through the sight. When the sight and the bore are properly alined on the aiming point, the 90mm rifle is foresighted (fig. 42).

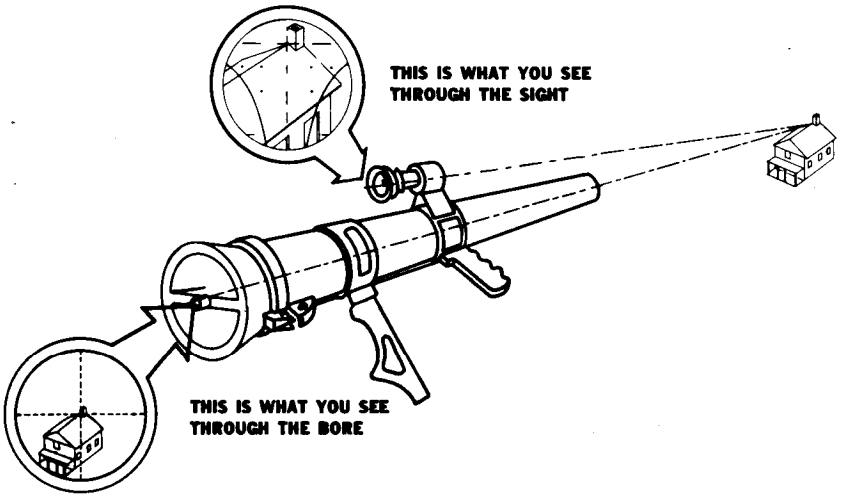

Figure 42. Sight picture in boresighting.

Section VII. ZEROING THE SUBCALIBER DEVICE

93. Target Selection

a. Accuracy with the subcaliber device depends on the zeroing procedures followed.

b. The subcaliber device for the 90mm rifle is zeroed at a greater range than the targets to be engaged. After selecting a target, place that segment of the range line which corresponds to the range of the target, over the visible center of mass of the target.

94. Firing

The gunner fires two rounds and observes their impact. While the loader holds the weapon steady, the gunner moves that range which corresponds to the range of the target to the center of impact of the two rounds. He does this with the azimuth and elevation screws located under the sight. He then resumes his original sight picture and fires two more rounds. He continues this process until he is hitting the visible center of mass of the target using his original sight picture, at which time the weapon is zeroed.

Downloaded from http://www.everyspec.com on 2010-12-20T14:46:53.

CHAPTER 6

ADVICE TO INSTRUCTORS

Section I. GENERAL

95. Purpose

This chapter is a guide for instructors in preparing, organizing, and presenting instruction on 90mm rifle.

96. Methods of Instruction

Basic teaching methods covered in FM 21-5 and FM 21-6 apply to instruction for the 90mm rifle. The specific nature of the subjects involved lends itself to demonstration and application as the most effective methods of instruction.

Section II. STANDARDS FOR TRAINING

97. Mechanical Training

Men are trained to—

a. Disassemble and assemble the 90mm rifle.

b. Explain how the 90mm rifle functions.

c. Determine the causes of common stoppages in the weapon and reduce them quickly.

d. Know the capabilities of the ammunition and care for and prepare ammunition for firing.

e. Care for and clean the 90mm rifle.

f. Destroy the rifle when directed to do so.

98. Marksmanship

Men are trained to—

a. Perform the duties of all members of the crew.

b. Load the 90mm properly.

c. Put the weapon in action.

d. Boresight the 90mm rifle.

e. Observe safety precautions.

f. Fire the weapon using the subcaliber device and service ammunition.

g. Qualify as a second class gunner or higher.

99. Technique of Fire

Men are trained to—

a. Describe the dispersion pattern.

b. Engage targets.

c. Estimate ranges quickly and accurately.

d. Estimate apparent speed quickly and accurately.

e. Determine leads.

f. Fire direct fire.

Downloaded from http://www.everyspec.com on 2010-12-20T14:46:53.

APPENDIX

REFERENCES

AR 320-5	Dictionary of United States Army Terms.
AR 385-63	Regulations for Firing Ammunition for Training, Target Practice, and Combat.
FM 5-15	Field Fortifications.
FM 5-20	Camouflage, Basic principles and Field Camouflage.
FM 5-25	Explosives and Demolitions.
FM 7-11	Rifle Company, Infantry, Airborne, and Mechanized.
FM 7-15	Rifle Platoon and Squads, Infantry, Airborne, and Mechanized.
FM 21-5	Military Training.
FM 21-6	Techniques of Military Instruction.
FM 21-26	Map Reading.
FM 21-30	Military Symbols.
FM 21-40	Small Unit Procedures in Chemical, Biological, and Radiological (CBR) Operations.
FM 23-71	Rifle Marksmanship.
TB 9-1300-204/1	Cartridge, 90mm HEAT, M371 for Rifle, M67: Description, Functioning, and use.
TM 3-220	Chemical, Biological, and Radiological (CBR) Decontamination.
TM 9-575	Auxiliary Sighting and Fire Control Equipment.
TM 9-1015-223-12	Operator and Organizational Maintenance Manual; 90mm Recoilless Rifle, M67.
TM 9-1015-223-2OP	Organizational Maintenance, Repair Parts, and Special Tool List.
TM 9-1300-204	Ammunition for Recoilless Rifles.
TM 38-750	Army Equipment Record Procedures.
DA Pam 108-1	Index of Army Motion Pictures, Filmstrips, Slides, and Phono-Recordings.
DA Form 2404	Equipment Inspection and Maintenance Worksheet.

Downloaded from http://www.everyspec.com on 2010-12-20T14:46:53.

INDEX

	Paragraphs	Pages
Ammunition:		
Care, handling	19	16
Classification	20	16
Description	18	16
Fuse, PIBD, M530	22	17
HEAT	21	16
Assembly	8	6
Balance, restoration	11	15
Boresighting	91	56
Characteristics	2	3
Crew drill:		
Equipment examination	40	24
Forming	38	24
Reports	41	24
Rifle in action	42	24
Rifle out of action	43	25
Posting squad	39	24
Servicing the piece	44	25
Data	3	3
Decontamination	28	20
Destruction:		
Ammunition	31	22
To prevent capture	30	21
Disassembly	8	
Equipment	17	16
Fire commands:		
Cease firing	85	55
Corrections	80	54
Examples	78	53
Sequence	77	53
Subsequent commands	79	54
Fire, technique of:		
Apparent speed	74	51
Boresighting	91	56
Cease firing	85	55
Chain of fire control	88	55
Characteristics:		
Dispersion	71	48
Dispersion rectangle	71	48
Trajectory	71	48
Corrections	80	54
Determining leads	73	51
Fire, adjustment	89	55
Fire commands	76	52
Fire commands, examples	78	53
Fire command, sequence	77	53
Fire commands, subsequent	79	54
Fire, neutralization	90	56
Firing	94	57
Lead estimation	75	52
Range determination:		
Estimate by eye	72	49
Map distance	72	49
Other methods	72	49
Stadia lines	72	49
Scope	70	48
Fire, technique of—Continued		
Target selection	93	57
Termination of alert	86	55
Firing	94	57
Gunner, assistant gunner training:		
Breathing	48	33
Examination	51	37
Fire adjustment	47	33
Position exercises	46	27
Sighting, aiming	45	25
Tracking	50	34
Trigger manipulation	49	33
Immediate action	14	15
Inspections	25	18
Instrument light T25	7	6
Lead estimation	75	52
Leads, determining	73	51
Lubrication	26	19
Malfunctions	11	15
Maintenance, general-preventive	24	18
Marksmanship, general:		
Crew duties	36	23
Squad leader duties	34	23
Training	33	23
Marksmanship training:		
Critique	67	42
Direct fire	65	42
Exercises	64	42
Introduction	63	42
Method	66	42
Qualification courses	68	42
Scorecard	Fig. 33	44
Mechanical functioning	10	8
Operation, principle of	9	8
Range safety, procedures:		
Coaches	55	38
Instruction firing	58	39
Loaders	56	38
Officer in charge	53	38
Organization	57	39
Record firing	60	39
Safety percautions	62	40
Scoring for qualification	61	40
Scoring personnel	54	38
Stationary, moving tragets	59	39
Training procedure	52	38
Recording procedures	27	20
Safety precautions	62	40
Spare parts	16	16
Stadia lines	72	49
Stoppages	13	15
Stoppages, reduction of	15	15
Subcaliber device	23	17
Target selection	93	57
Telescope M103	5	5
Telescope mount M110	6	6

Downloaded from http://www.everyspec.com on 2010-12-20T14:46:53.

By Order of the Secretary of the Army:

HAROLD K. JOHNSON,
General, United States Army,
Chief of Staff.

Official:

J. C. LAMBERT,
Major General, United States Amy,
The Adjutant General.

Distribution:

Active Army:

DCSPER (2)	Armies (5)
ACSI (2)	MDW (5)
DCSLOG (2)	Corps (3)
ACSFOR (2)	Div (10)
CORC (2)	Div Arty (1)
CNGB (5)	Bde (3)
CRD (1)	Regt/Gp/bg (1)
COA (1)	CC (2)
CINFO (1)	Bn (2)
TIG (1)	Co/Btry (1)
USCONARC (5)	USATC (5)
USACDC (5)	Br. Svc Sch (1)
USAMC (5)	USAOC&S (3)
USAIB (5)	USA Corps (3)
LOGCOMD (1)	

NG: State AG (3) ; units—same as Active Army except allowance is one (1) copy each unit.
USAR: Units—Same as Active Army except allowance is one copy each unit.
For explanation of abbreviations used, see AR 320-50.

Downloaded from http://www.everyspec.com on 2010-12-20T14:46:53.

PIN: 023697-003