C-5A Galaxy
Systems Engineering
Case Study

By

John M. Griffin, SES (Ret.)

Center for Systems Engineering

at the Air Force Institute of Technology (AFIT/SY)

2950 Hobson Way, Wright-Patterson AFB OH 45433 -7765

PREFACE

In response to Air Force Secretary James G. Roche's charge to reinvigorate the systems engineering profession, the Air Force Institute of Technology (AFIT) undertook a broad spectrum of initiatives that included creating new and innovative instructional material. The Institute envisioned case studies on past programs as one of these new tools for teaching the principles of systems engineering.

Four case studies, the first set in a planned series, were developed with the oversight of the Subcommittee on Systems Engineering to the Air University Board of Visitors. The Subcommittee includes the following distinguished individuals:

Chairman

Dr. Alex Levis, AF/ST

Members

Brigadier General Tom Sheridan, AFSPC/DR
Dr. Daniel Stewart, AFMC/CD
Dr. George Friedman, University of Southern California
Dr. Andrew Sage, George Mason University
Dr. Elliot Axelband, University of Southern California
Dr. Dennis Buede, Innovative Decisions Inc.
Dr. Dave Evans, Aerospace Institute

Dr. Levis and the Subcommittee on Systems Engineering crafted the idea of publishing these case studies, reviewed several proposals, selected four systems as the initial cases for study, and continued to provide guidance throughout their development. The Subcommittee's leading minds in systems engineering have been a guiding force to charter, review, and approve the work of the authors. The four case studies produced in this series are the C-5 Galaxy, the F-111, the Hubble Space Telescope, and the Theater Battle Management Core System.

Approved for Public Release; Distribution Unlimited

The views expressed in this Case Study are those of the author(s) and do not reflect the official policy or position of the United States Air Force, the Department of Defense, or the United States Government.

FOREWORD

At the direction of the Secretary of the Air Force, Dr. James G. Roche, the Air Force Institute of Technology (AFIT) established a Center for Systems Engineering (CSE) at its Wright-Patterson AFB, OH, campus in 2002. With academic oversight by a Subcommittee on Systems Engineering, chaired by Air Force Chief Scientist Dr. Alex Levis, the CSE was tasked to develop case studies focusing on the application of systems engineering principles within various aerospace programs. At a May 2003 meeting, the Subcommittee reviewed several proposals and selected the Hubble Telescope (space system), Theater Battle Management Core System (complex software development), F-111 fighter (joint program with significant involvement by the Office of the Secretary of Defense), and C-5 cargo airlifter (very large, complex aircraft). The committee drafted an initial case outline and learning objectives, and suggested the use of the Friedman-Sage Framework to guide overall analysis.

The CSE contracted for management support with Universal Technology Corporation (UTC) in July 2003. Principal investigators for the four cases included Mr. John Griffin for the C-5A, Dr. G. Keith Richey for the F-111, Mr. James Mattice for the Hubble Space Telescope, and Mr. Josh Collens from The MITRE Corporation for the Theater Battle Management Core System effort.

The Department of Defense continues to develop and acquire joint complex systems that deliver needed capabilities demanded by our warfighters. Systems engineering is the technical and technical management process that focuses explicitly on delivering and sustaining robust, high-quality, affordable products. The Air Force leadership, from the Secretary of the Air Force, to our Service Acquisition Executive, through the Commander of Air Force Materiel Command, has collectively stated the need to mature a sound systems engineering process throughout the Air Force.

These cases will support academic instruction on systems engineering within military service academies and at both civilian and military graduate schools. Plans exist for future case studies focusing on other areas. Suggestions have included various munitions programs, Joint service programs, logistics-led programs, science and technology/laboratory efforts, additional aircraft programs such as the B-2 bomber, and successful commercial systems.

As we uncovered historical facts and conducted key interviews with program managers and chief engineers, both within the government and those working for the various prime and subcontractors, we concluded that systems programs face similar challenges today. Applicable systems engineering principles and the effects of communication and the environment continue to challenge our ability to provide a balanced technical solution. We look forward to your comments on this case study and the others that follow.

MARK K. WILSON, SES

Director, Center for Systems Engineering
Air Force Institute of Technology
http://cse.afit.edu/

ACKNOWLEDGEMENTS

The author would like to acknowledge the special contributions of people who dedicated their time and energy to make this report accurate and complete. My heartfelt thanks go to Eric Bucker, ASC/ENFS, for his efforts to research the files at the Engineering Directorate at Wright-Patterson Air Force Base (WPAFB), his contribution to the weight section of the case study, his insightful suggestions, and his thorough editing. Mr. Robert Ormsby, Lockheed (retired), was a key link to the contractor's conduct of the program and provided insight of immense value. He also sponsored me to attend the Retired Lockheed C-5A Luncheon and introduced me to some the wonderful people who designed and built the aircraft. A special thank you to Mr. Les Smithers, who gave me insight into the process at the AF SPO and how the fatigue issue unfolded. Mr. Tim Sweeney shared the AF SPO engineering conduct of the systems engineering process. Sincere appreciation to all the people listed in Appendix 3, who volunteered their time and insight during the interviews. Thanks to Dr. Dayne Aldridge for giving me the instructor/student view of the case study. And special thanks to Lauren Proffit, Universal Technology Corporation, without whom I could never have finished the editing and formatting of the report. Heartfelt congratulations to all the people involved in the program and particularly the systems engineers and design engineers at both Lockheed and WPAFB for their tireless efforts in delivering this truly outstanding capability that has served our nation so well for so many years.

A special thank you and note of appreciation to our AFIT Project Leader, Lt Col John Colombi, who provided guidance to the authors, along with continuous motivation. And the time spent reviewing and discussing the cases with the UTC authors, Jim Mattice (Hubble), and Keith Richey (F-111), was the true foundation for building our studies.

John M. Griffin

EXECUTIVE SUMMARY

The C-5 Systems Engineering Case Study captures the untold story of the application of systems engineering during the concept exploration, development, and production of the USAF C-5A and C-5B aircraft. The case study examines and dissects the systems engineering process as applied by the Air Force C-5 System Program Office and the prime contractor, Lockheed, Georgia, from the program's genesis in 1957 to the last delivery of the C-5A and the beginning of the C-5B program in 1973. Numerous interviews were conducted with the principals who managed and directed the program and a story of the systems engineering process was developed. The case study traces the program's systems engineering process in translating a vision into 125 cargo transport aircraft that have served our nation proudly for the last 35 years.

A description of the program is essential to orient students to the size of the aircraft and the magnitude of the program and thus enable them to appreciate the systems engineering process and how it was applied. When the C-5 aircraft first entered the inventory in 1970, it was the largest aircraft in the world, and it is still the largest transport cargo aircraft in our inventory. It was the first of the behemoths. Figure 1 shows the dimensions of the aircraft and helps give a perspective of its size.

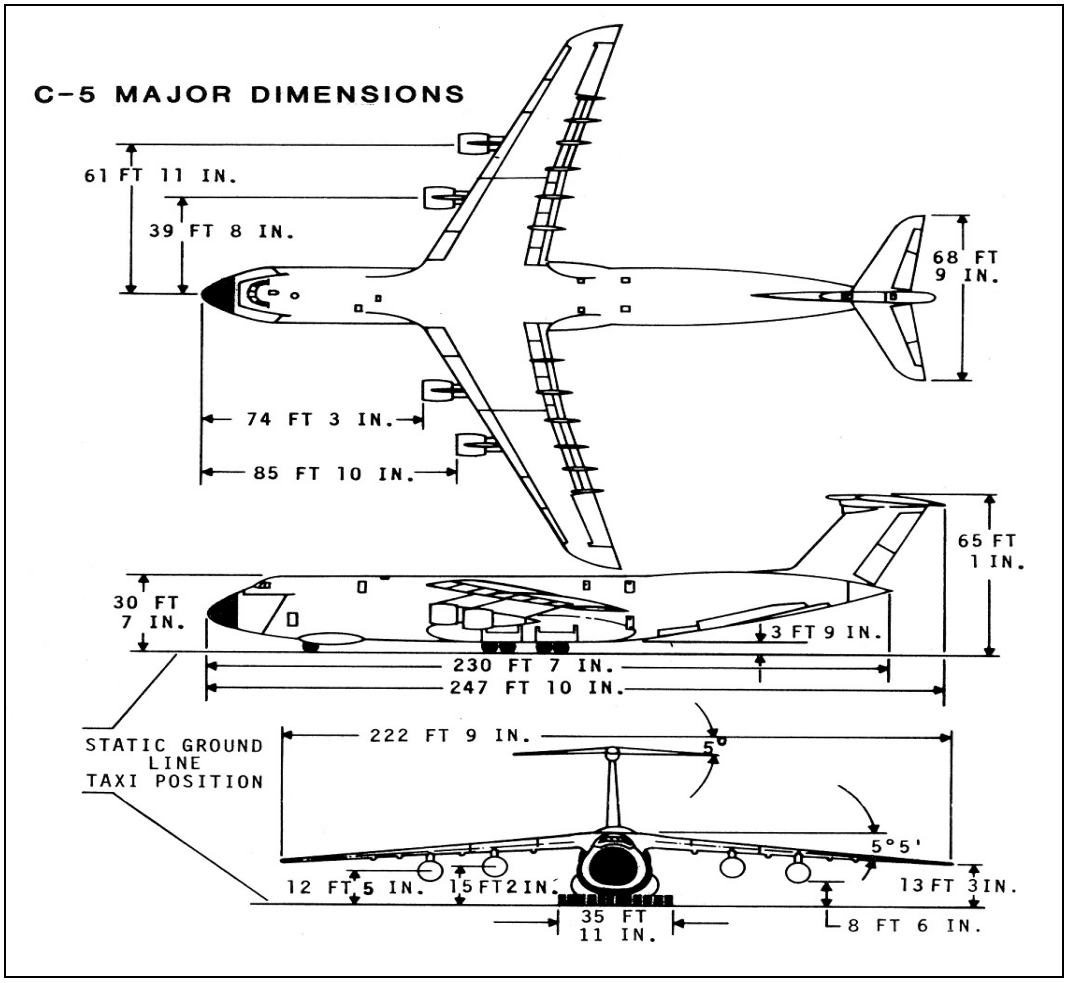

Figure 1. Three View Drawing of the C-5A Aircraft [1]

The success of the C-5 transport aircraft is underscored by the performance of the fleet as an operational system and its heavy lift support in all of our conflicts from Vietnam to Iraq. It still accomplishes tasks that no other military aircraft, such as the new C-17 or any derivative of commercial cargo aircraft, can perform, and has consistently carried more cargo than any other aircraft in the time of war. With a towering six-story "T" tail and a unique knight's visor forward-loading door, this gigantic aircraft is capable of carrying two of the heaviest Army tanks and their related equipment, or three CH 47 Chinook helicopters. The front and aft ramps facilitate easy drive-on, drive-off loading of military vehicles and equipment.

The aircraft is capable of carrying heavy, outsized cargo in a cargo bay that measures 19.5 feet wide by 13.5 feet high by 120 feet long. The weight and performance of the aircraft is shown in Table 1.

Table 1. C-5A Weight and Performance Capabilities [1]

	Weight Capability
Design Weight	764,000 pounds (1) 840,000 pounds (2) 920,000 pounds (3)
Max payload	265,000 pounds (4)
Max fuel	335,000 pounds
Max landing weight	635,850 pounds
	Performance Capability
Cruise performance	440 knots at 30,000 feet
Airport performance Takeoff Landing	 8,000 feet at maximum gross weight 4,000 feet with 100,000 pounds cargo
(1) at 2.25 g (2) with the new wing (3) in flight limit after refueling (4) with the new wing	

The systems engineering process was essential to the development of the C-5. The case study will describe the application of systems engineering from the initial phase of development and documentation of the system requirements, through the proposal phase, and during the design and development, testing, and production. The study will detail the success of the systems engineering process to show an appreciation of the process used then and permit comparison as a benchmark against today's processes. Additionally, it will analyze the failures of the C-5A program that fueled the controversy surrounding the program during its development. The role of systems engineering in the two most significant controversies – the cost overrun and the ineffective wing and pylon designs – will be presented. The reader will be exposed to the decisions made and the decisions not made, and to the unintended consequences that arose from these events.

The systems engineering process and its unique application to the C-5 program will be examined by developing four fundamental learning principles (LPs) from the program. These learning principles will be analyzed, dissected, and discussed in detail to allow the reader to appreciate the circumstances surrounding the systems engineers, the program managers, and senior leadership. These learning principles are the basic lessons that most graphically highlight

the core features or dominant factors that influence the outcome of the program. For the C-5, they are:

LP 1, Requirements. The process for developing and documenting the system performance requirements integrated the User (warfighter), planners, developers, and technologists from both the government and industry in a coordinated set of trade studies. It resulted in a well-balanced, well-understood set of requirements that fundamentally remained unchanged throughout the program.

LP 2, Total Package Procurement Concept (TPPC). The Total Package Procurement Concept (TPPC) employed by the government required a fixed-price, incentive fee contract for the design, development, and production of 58 aircraft. It included a clause giving Total Systems Performance Responsibility (TSPR) to the prime contractor. TPPC was invented to control costs, but it was the underlying cause of the cost overrun and limited the number of aircraft purchased under the original contract.

LP 3, Weight Empty Guarantee. A Weight Empty Guarantee was included in the specification as a performance requirement and in the contract as a cost penalty for overweight conditions of delivered aircraft. The aircraft Weight Empty Guarantee dominated the traditional aircraft performance requirements (range, payload, etc.), increased costs, and resulted in a major shortfall in the wing and pylon fatigue life. The stipulation of a Weight Empty Guarantee as a performance requirement had far-reaching and significantly deleterious unintended consequences.

LP 4, Independent Review Teams (IRTs). The Air Force C-5 Systems Program Office employed Independent Review Teams (IRTs) to assemble national experts to examine the program and provide recommendations to the government. These problem-solving teams were convened to garner the best advice in particular technical areas: structure design and technology, and designs to achieve useful service life.

The development of the learning principles was an iterative and maturing process. Initially, a set of learning principles was postulated from the author's experience and knowledge of the program. As interviews were conducted with key people, the list of lessons was narrowed for the first draft. The AFIT Systems Engineering Subcommittee reviewed the draft and the list evolved. After the final list of learning principles was developed, the Friedman-Sage[2] assessment tool was used to examine the context of all the learning principles and their effect on the program. The Friedman-Sage construct and its associated matrix of nine Concept Domains and Three Responsibility Domains gives the systems engineering practitioner a powerful tool to examine any program's systems engineering progress and identify areas of risk. A description of the tool, along with other key items that underpin the case study, will be found in the six appendices.

Table of Contents

PREFACE ii
FOREWORD iii
ACKNOWLEDGEMENTS iv
EXECUTIVE SUMMARY v
1.0 SYSTEMS ENGINEERING PRINCIPLES 1
1.1 General Systems Engineering Process 1
1.2 C-5A Learning Principles 5
2.0 SYSTEM DESCRIPTION 9
2.1 Cargo Loading Features 10
3.0 C-5 SYSTEMS ENGINEERING LEARNING PRINCIPLES 12
3.1 C-5 Learning Principle 1: Requirements 14
3.2 C-5 Learning Principle 2: Total Package Procurement Concept (TPPC) 21
3.3 C-5 Learning Principle 3: Guaranteed Weight 23
3.4 C-5 Learning Principle 4: Independent Review Team 35
4.0 SUMMARY 42
5.0 REFERENCES 44
6.0 LIST OF APPENDICES 46
Appendix 1 - Completed Friedman Sage Matrix for the C-5A 47
Appendix 2 - Author Biograpies 48
Appendix 3 - Interviews 50
Appendix 4 - Titanium Trade Study 51
Appendix 5 - C-5 System Concept Design Trade Studies 52
Appendix 6 - C-5 Operational Experience and Projected Upgrades 57

List of Figures

Figure 1 Three View Drawing of the C-5A Aircraft [1] v
Figure 1-1 The Systems Engineering Process as Presented by the Defense Acquisition University 2
Figure 2-1 C-5 Three-View [1] 9
Figure 2-2 C-5A Loading and Unloading Equipment 11
Figure 3-1 Operational Mission Analysis and Communications During Concept Exploration 15
Figure 3-2 C-5A Landing Gear Configuration 18
Figure 3-3 Lockheed's Projected Weight Track vs. Phase [11] 28
Figure 3-4 Actual Weight Data for C-5A Through the Ninth Delivered Aircraft [11] 30
Figure 3-5 Actual Total Aircraft Weight Data Through the Ninth Aircraft [11] 31
Figure 3-6 Cost Behavior as Weight Changes 33
Figure 3-7 Static Test Article [12] 36
Figure 3-8 Fatigue Test Articles [12] 37
Figure 3-9 Pie Chart from IRT [14] 39
Figure A4-1 Titanium Trade Study 51
Figure A5-1 The High-Speed Lambda Wing Design Concept [9] 52
Figure A5-2 Sorties vs. Maximum Payload [9] 53
Figure A5-3 Trade Study for Cargo Bay Size and 10-Year Life Cycle Costs [9] 54
Figure A5-4 System Costs vs. Maximum Payload [9] 55
Figure A5-5 Wing Loading Trade Study Results [9] 55
Figure A6-1 Cockpits from the Original Program Compared to AMP 58
Figure A6-2 Artist's Rendition of the C-5 with the New Engines 59

List of Tables

Table 1 C-5A Weight and Performance Capabilities [1] vi
Table 1-1 A Framework of Key Systems Engineering Concepts and Responsibilities 4
Table 1-2 Friedman Sage Matrix with C-5 Learning Principles [2] 7
Table 2-1 C-5A Weight and Performance Capabilities 10
Table 3-1 Key C-5 Milestones 12
Table 3-2 C-5A Post Design Weight Analysis Report, Vol. II [11] 27
Table 3-3 C-5 Independent Review Team Options A Through K [13] 38
Table 3-4 TCTOs for Structural Modifications 40
Table A1-1 The Friedman Sage Matrix for the C-5A 47
Table A5-1 Cost Comparison of the Straight Wing Configurations [9] 53
Table A6-1 C-5 Cargo Fleet Operations Compared to All Cargo Operations 57

1.0 SYSTEMS ENGINEERING PRINCIPLES

1.1 General Systems Engineering Process

1.1.1 Introduction

The Department of Defense continues to develop and acquire joint systems and to deliver needed capabilities to the warfighter. With a constant objective to improve and mature the acquisition process, it continues to pursue new and creative methodologies to purchase these technically complex systems. A sound systems engineering process, focused explicitly on delivering and sustaining robust, high-quality, affordable products that meet the needs of customers and stake holders must continue to evolve and mature. Systems engineering is the technical and technical management process that results in delivered products and systems that exhibit the best balance of cost and performance. The process must operate effectively with desired mission-level capabilities, establish system-level requirements, allocate these down to the lowest level of the design, and ensure validation and verification of performance, meeting cost and schedule constraints. The systems engineering process changes as the program progresses from one phase to the next, as do the tools and procedures. The process also changes over the decades, maturing, expanding, growing, and evolving from the base established during the conduct of past programs. Systems engineering has a long history. Examples can be found demonstrating a systemic application of effective engineering and engineering management, as well as poorly applied, but well defined processes. Throughout the many decades during which systems engineering has emerged as a discipline, many practices, processes, heuristics, and tools have been developed, documented, and applied.

Several core lifecycle stages have surfaced as consistently and continually challenging during any system program development. First, system development must proceed from a well-developed set of requirements. Regardless of overall waterfall or evolutionary acquisition approach, the system requirements must flow down to all subsystems and lower level components. System requirements need to be stable, balanced and must properly reflect all activities in all intended environments.

Next, the system planning and analysis occur with important tradeoffs and a baseline architecture developed. These architectural artifacts can depict any legacy system modifications, introduction of new technologies and overall system-level behavior and performance. Modeling and simulation are generally employed to organize and assess alternatives at this introductory stage. System and subsystem design follows the functional architecture. Either newer object-oriented analysis and design or classic structured analysis using functional decomposition and information flows/ data modeling occurs. Design proceeds logically using key design reviews, tradeoff analysis, and prototyping to reduce any high-risk technology areas.

Important to the efficient decomposition and creation of the functional and physical architectural designs are the management of interfaces and integration of subsystems. This is applied to subsystems within a system, or across large, complex systems of systems. Once a solution is planned, analyzed, designed and constructed, validation and verification take place to ensure satisfaction of requirements. Definition of test criteria, measures of effectiveness (MOEs) and measures of performance (MOPs), established as part of the requirements process well before any component/ subsystem assembly, takes place.

There are several excellent representations of the systems engineering process presented in the literature. These depictions present the current state of the art in the maturity and evolution of the systems engineering process. One can find systems engineering process definitions, guides and handbooks from the International Council on Systems Engineering (INCOSE), European Industrial Association (EIA), Institute of Electrical and Electronics Engineers (IEEE), and various Department of Defense (DoD) agencies and organizations. They show the process as it should be applied by today's experienced practitioner. One of these processes, long used by the Defense Acquisition University (DAU), is depicted by Figure 1-1. It should be noted that this model is not accomplished in a single pass. Alternatively, it is an iterative and nested process that gets repeated at low and lower levels of definition and design.

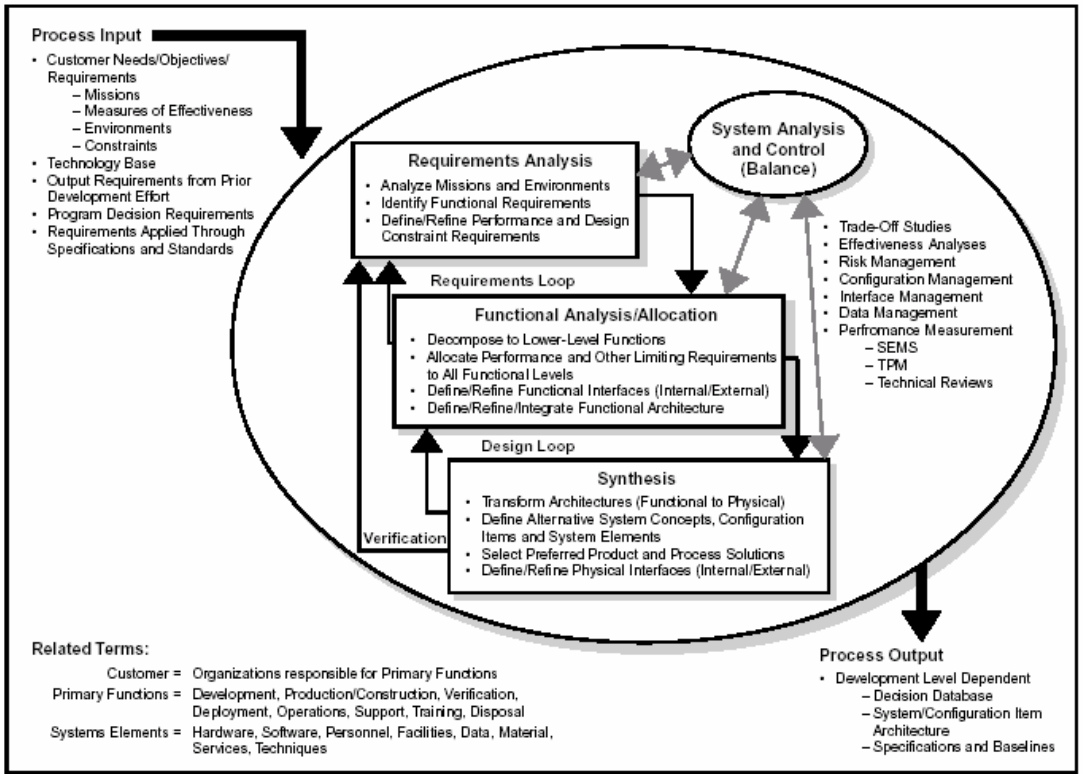

Figure 1-1. The Systems Engineering Process as Presented by the Defense Acquisition University

1.1.2 Evolving Systems Engineering Process

The DAU model, like all others, has been documented in the last two decades, and has expanded and developed to reflect a changing environment. Systems are becoming increasingly complex internally and more interconnected externally. The process used to develop the aircraft and systems of the past was a process effective at the time. It served the needs of the practitioners and resulted in many successful systems in our inventory. Notwithstanding, the cost and schedule performance of the past programs are fraught with examples of some well-managed programs and ones with less stellar execution. As the nation entered the 1980s and 1990s, large DoD and commercial acquisitions were overrunning costs and behind schedule. The aerospace industry and its organizations were becoming larger and were more

geographically and culturally distributed. The systems engineering process, as applied within the confines of a single system and a single company, is no longer the norm.

Today, many factors overshadow new acquisition, including system-of-systems (SoS) context, network centric warfare and operations, and the rapid growth in information technology. These factors have driven a new form of emergent systems engineering, which focuses on certain aspects of our current process. One of these increased areas of focus resides in the architectural definitions used during system analysis. This process will be differentiated by greater reliance on reusable, architectural views describing the system context and concept of operations, interoperability, information and data flows and network service-oriented characteristics. The DoD has recently made these architectural products, described in the DoD Architectural Framework (DoDAF), mandatory to enforce this new architecture-driven systems engineering process throughout the acquisition lifecycle.

1.1.3 Case Studies

The systems engineering process to be used in today's complex system-of-systems projects is a process matured and founded on the principles of systems developed in the past. The examples of systems engineering used on other programs, both past and present, provide a wealth of lessons to be used in applying and understanding today's process. It was this thinking that led to the construction of the four case studies released in this series.

The purpose of developing detailed case studies is to support the teaching of systems engineering principles. They will facilitate learning by emphasizing to the student the long-term consequences of the systems engineering and programmatic decisions on program success. The systems engineering case studies will assist in discussion of both successful and unsuccessful methodologies, processes, principles, tools, and decision material to assess the outcome of alternatives at the program/system level. In addition, the importance of using skills from multiple professions and engineering disciplines and collecting, assessing, and integrating varied functional data will be emphasized. When they are taken together, the student is provided real-world, detailed examples of how the process attempts to balance cost, schedule and performance.

The utilization and mis-utilization of systems engineering learning principles will be highlighted, with special emphasis on the conditions that foster and impede good systems engineering practice. Case studies should be used to illustrate both good and bad examples of acquisition management and learning principles, to include whether:

- Every system provides a balanced and optimized product to a customer
- Effective Requirements analysis was applied
- Consistent and rigorous application of systems engineering Management standards was applied
- Effective Test planning was accomplished
- There were effective major Technical program reviews
- Continuous Risk assessments and management was implemented
- There were reliable Cost estimates and policies
- They used disciplined application of Configuration Management
- A well defined System boundary was defined
- They used disciplined methodologies for complex systems
- Problem solving incorporated understanding of the System within bigger environment (customer's customer)

The systems engineering process transforms an operational need into a set of system elements. These system elements are allocated and translated by the systems engineering process into detailed requirements. The systems engineering process, from the identification of the need to the development and utilization of the product, must continuously integrate and balance the requirements, cost, and schedule to provide an operationally effective system throughout its life cycle. Case studies should also highlight the various interfaces and communications to achieve this optimization, which include:

- The program manager/systems engineering interface essential between the operational user and developer (acquirer) to translate the needs into the performance requirements for the system and subsystems.
- The government/contractor interface essential for the practice of systems engineering to translate and allocate the performance requirements into detailed requirements.
- The developer (acquirer)/User interface within the project, essential for the systems engineering practice of integration and balance.

The systems engineering process must manage risk, both known and unknown, as well as both internal and external. This objective will specifically capture those external factors and the impact of these uncontrollable influences, such as actions of Congress, changes in funding, new instructions/policies, changing stakeholders or user requirements or contractor and government staffing levels.

Lastly, the systems engineering process must respond to "Mega-Trends" in the systems engineering discipline itself, as the nature of systems engineering and related practices do vary with time.

1.1.4 Framework for Analysis

The case studies will be presented in a format that follows the learning principles specifically derived for the program, but will utilize the Friedman-Sage framework to organize the assessment of the application of the systems engineering process. The framework and the derived matrix can play an important role in developing case studies in systems engineering and systems management, especially case studies that involve systems acquisition. The framework presents a nine row by three column matrix shown in Table 1-1.

Table 1-1. A Framework of Key Systems Engineering Concepts and Responsibilities

Concept Domain	Responsibility Domain		
	1. Contractor Responsibility	**2. Shared Responsibility**	**3. Government Responsibility**
A. Requirements Definition and Management			
B. Systems Architecting and Conceptual Design			
C. System and Subsystem Detailed Design and Implementation			
D. Systems and Interface Integration			
E. Validation and Verification			
F. Deployment and Post Deployment			
G. Life Cycle Support			
H. Risk Assessment and Management			
I. System and Program Management			

Six of the nine concept domain areas in Table 1-1 represent phases in the systems engineering lifecycle:

A. Requirements Definition and Management

B. Systems Architecting and Conceptual Design

C. Detailed System and Subsystem Design and Implementation

D. Systems and Interface Integration

E. Validation and Verification

F. System Deployment and Post Deployment

Three of the nine concept areas represent necessary process and systems management support:

G. Life Cycle Support

H. Risk management

I. System and Program Management

While other concepts could be have been identified, the Framework suggests these nine are the most relevant to systems engineering in that they cover the essential life cycle processes in systems acquisition and the systems management support in the conduct of the process. Most other concept areas that were identified during the development of the matrix appear to be subsets of one of these. The three columns of this two-dimensional framework represent the responsibilities and perspectives of government and contractor, and the shared responsibilities between the government and the contractor.

The important feature of the Friedman-Sage framework is the matrix. The systems engineering case studies published by AFIT employ the Friedman-Sage construct and matrix as the baseline assessment tools to evaluate the conduct of the systems engineering process for the topic program. The Friedman Sage matrix is not a unique systems engineering applications tool per se, but rather a disciplined approach to evaluate the systems engineering process, tools, and procedures as applied to a program.

The Friedman-Sage matrix is based on two major premises as the founding objectives:

- In teaching systems engineering, case studies can be instructive in that they relate aspects of the real world to the student to provide valuable program experience and professional practice to academic theory.

In teaching systems engineering in DoD, there has previously been a little distinction between duties and responsibilities of the government and industry activities. More often than not, the government role in systems engineering is the role as the requirements developer.

1.2 C-5A Learning Principles

The programs of the past can provide today's systems engineering practitioners with valuable insight into the methods used by our predecessors in developing our heritage aircraft. The success of these systems can be traced to the systems engineering process, which, while different from the processes of today, resemble them in many ways. The C-5A fleet has

demonstrated success in operation, but, as will be discussed, the development of the aircraft was plagued by a major technical failure in the design of the structure, most notably the wing and pylon. The fatigue or service life led to initial operational restrictions and required a complete new wing to be designed and retrofitted to the original aircraft. The program's cost overrun was also a major contentious issue starting in 1966 and lasting for the life of the program. The application of the systems engineering process and its role in the program successes and failures will be traced from concept exploration to the delivery of the 81st C-5A model in May 1973.

The C-5 learning principles are:

LP 1, Requirements. The process for developing and documenting the system performance requirements integrated the User (warfighter), planners, developers, and technologists from both the government and industry in a coordinated set of trade studies. It resulted in a well-balanced, well-understood set of requirements that fundamentally remained unchanged throughout the program.

LP 2, Total Package Procurement Concept (TPPC). The Total Package Procurement Concept (TPPC) employed by the government required a fixed-price, incentive fee contract for the design, development, and production of 58 aircraft. It included a clause giving Total Systems Performance Responsibility (TSPR) to the prime contractor. TPPC was invented to control costs, but it was the underlying cause of the cost overrun and limited the number of aircraft purchased under the original contract.

LP 3, Weight Empty Guarantee. A Weight Empty Guarantee was included in the specification as a performance requirement and in the contract as a cost penalty for overweight conditions of delivered aircraft. The aircraft Weight Empty Guarantee dominated the traditional aircraft performance requirements (range, payload, etc.), increased costs, and resulted in a major shortfall in the wing and pylon fatigue life. The stipulation of a Weight Empty Guarantee as a performance requirement had far-reaching and significantly deleterious unintended consequences.

LP 4, Independent Review Teams (IRTs). The Air Force C-5 Systems Program Office employed Independent Review Teams (IRTs) to assemble national experts to examine the program and provide recommendations to the government. These problem-solving teams were convened to garner the best advice in particular technical areas: structure design and technology, and designs to achieve useful service life.

1.2.1 C-5A Friedman Sage Matrix

Table 1-2 shows the Friedman-Sage matrix for the C-5 and the four entries in the matrix most representative of the four learning principles. C-5 Learning Principle 1, Requirements, is clearly represented by the first row of the concept domain, Requirements Definition and Management. The case study will follow the systems engineering process used to define the requirements and document them in the system specification, as well as the contractor's process for allocating the functional requirements to the design requirements. While at the beginning of the requirements process the bulk of the responsibility lies with the customer, the responsibility

for requirements definition shared between the contractor and the government is also a vital part of the process.

C-5 Learning Principle 2, Total Package Procurement Concept (TPPC), falls primarily at the intersection of system and program management and into the government's responsibility, but, again, this decision process spans all three responsibility domains. While it was the government's responsibility to select the contract type, there is implied responsibility on the part of the contractor to assess the risk in accomplishing the contract and a shared responsibility to derive the pros and cons of contemplated contract strategies. This proved particularly significant for the C-5, as will be shown. The contract type stipulated by TPPC also affected the system design of the third row, first column, which is primarily a contractor responsibility.

C-5 Learning Principle 3, Weight Empty Guarantee, heavily influenced the systems engineering process and is representative of a contractor responsibility (third row, first column). It also dominated the Validation and Verification row, particularly the shared responsibility, because of the negative impact of weight and its impact on reduced service life, all of which was discovered during full scale testing late in the program cycle.

C-5 Learning Principle 4, Independent Review Teams (IRTs) employed by the Air Force SPO was dominant in the Validation and Verification row, middle column, shared responsibility only because of the specific of use of IRTs for the C-5. The use of IRTs is a vital function of SPOs in general and therefore would usually be noted as a Systems and Program Management function of the Friedman Sage matrix. It will be highlighted in both the locations of the matrix for the C-5 because the SPO convened IRTs to solve a specific problem that applied to Validation and Verification of the new wing design. The entry in the matrix under the shared responsibility reflects that the team was populated by national experts and also by members of the contractor's design team and personnel from the Air Force SPO.

Table 1-2. Friedman Sage Matrix with C-5 Learning Principles [2]

Concept Domain	Responsibility Domain		
	1. SE Contractor Responsibility	**2. Shared Responsibility**	**3. Government Responsibility**
A. Requirements Definition and Management			LP 1 Requirements
B. Systems Architecting and Conceptual Design			
C. System and Subsystem Detailed Design and Implementation	LP 3, Weight Empty Guarantee		
D. Systems and Interface Integration			
E. Validation and Verification		LP 4 Independent Review Teams	
F. Deployment and Post Deployment			
G. Life Cycle Support			
H. Risk Assessment and Management			
I. System and Program Management		LP 4 Independent Review Teams	LP 2, TPPC

As noted, the three columns of this two-dimensional concept framework represent the responsibility domain and perspectives of the government and the contractor, respectively, and responsibilities shared by the government and the contractor. The complete systems engineering process for the C-5A program is shown in matrix form in Appendix 1 to illustrate the application

of the framework and matrix for this case study. The four learning principles and the highlighted boxes of the matrix will organize the data and discussion in the body of this case study.

2.0 SYSTEM DESCRIPTION

The C-5A cargo aircraft was conceived in the early 1950s by senior leadership in the U.S. Air Force and the Military Air Transport Service (MATS). It was becoming increasingly clear that the nation would be engaged in conflicts arising in distant locations, and senior military planners contemplated methods to employ forces that could quickly stop an advancing enemy. They envisioned a very large cargo/transport aircraft capable of carrying the heaviest of the Army M-60 tanks, large bulky cargo such as the Chinook CH-47 helicopter, and other heavy Army equipment for extremely long distances. The aircraft was to be part of a family of jet engine-powered platforms that would transport an entire Army division to the war front. Figure 2-1 shows the vehicle three-view.

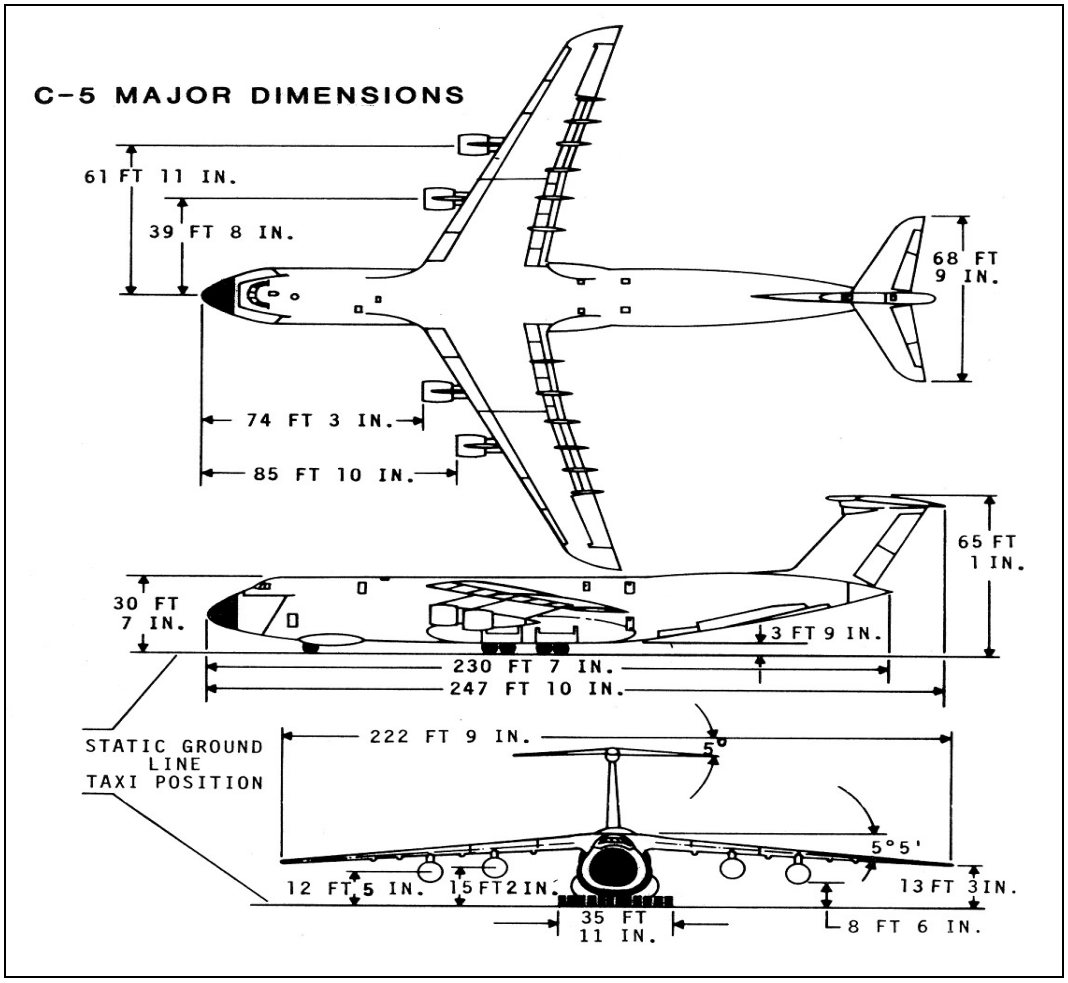

Figure 2-1. C-5 Three-View [1]

Table 2-1 shows the performance characteristics of the aircraft.

Table 2-1. C-5A Weight and Performance Capabilities

	Weight Capability
Design Weight	764,000 pounds (1) 840,000 pounds (2) 920,000 pounds (3)
Max payload	265,000 pounds (4)
Max fuel	335,000 pounds
Max landing weight	635,850 pounds
	Performance Capability
Cruise performance	440 knots at 30,000 feet
Airport performance Takeoff Landing	 8,000 feet at maximum gross weight 4,000 feet with 100,000 pounds cargo
(1) at 2.25 g (2) with the new wing (3) in flight limit after refueling (4) with the new wing	

2.1 Cargo Loading Features

The aft cargo bay doors and the forward knight's visor nose allow for drive-on and drive-off loading capabilities. Additionally, the fore and aft sections of the aircraft have loading ramps that can be positioned to truck bed height. A further complementary feature that facilitates ease of cargo loading is the unique kneeling landing gear, which can position the aircraft height from the normal taxi height of 113 inches down to 79 inches above the ground. The aft cargo doors can also be opened in flight for airdrop missions, allowing aerial delivery of pallets weighing up to 50,000 pounds. The aft paratrooper doors are located on each side of the cargo compartment. The C-5A with landing gear set at its lowest level, raised visor, and opened aft ramp doors is shown in Figure 2-2.

Figure 2-2. C-5A Loading and Unloading Equipment

3.0 C-5 SYSTEMS ENGINEERING LEARNING PRINCIPLES

Table 3-1 shows the key events of the time frame covered by the case study for the C-5 program. The C-5A and C-5B continue today as active inventory aircraft and are even funded for modernization. Two programs, Avionics Modernization Program (AMP) and Reliability Enhancement Re-Engine Program (RERP), are ongoing and summarized in Appendix 6.

Table 3-1. Key C-5 Milestones

Concept Exploration	**1957–1963** *LP 1, Requirements*
Mission Effectiveness/Operational Anal	1957–1963
Contractor Teams Assembled	1961–1963
TPPC Evolution	1963–1965 *LP 2, TPPC*
AF SPO Cadre Established	1964
Systems Design and Dev't	**1964–1972**
Contractor Conceptual Design Trades	1961–1964
RFP Release	Dec 1964
Contractor submits proposal	20 April 1965
Contractor Proposal Evaluation by AF	April 1965-Sept 1965 *LP 3, Weight empty*
Contractor Initial Debriefs	Sept 1965
Lockheed Announced as C-5 Winner	Sept 1965
Weight Growth/Drag Increase	Dec 1965-Jan 1967
SPO Cure Notice	Feb 1967
First SPO IRT	1967 *LP 4, Independent Review Teams*
First Fatigue Test Results	June 1968–Dec 1972
First Flight	28 June 1968
Defense Advisory Group	1969
ASC IRT	1969–1971
Flight Restrictions on C-5A	1969–1987
Production of C-5A	**19671973**
Last (81st) C-5A Delivered	May 1973
Initial Operational Capability	**June 1970**
New Wing Design start	**Jan 1976**
First C-5A Wing Modification	**June 1981**
First C-5B Delivered	**Sept 1985**
Last C-5A Wing Modification	**May 1987**

The learning principles are shown in shorthand notation in the table to show when they first surfaced. This table will be a handy reference to the reader during the discussions of the learning principles in the text in Sections 3.2 through 3.5 to keep dates and events in the proper chronological order.

Lockheed Management Process

The technical and management staff on the C-5A program at Lockheed involved themselves in the systems engineering and system integration process on a daily basis. Lockheed managed interfaces were managed within the company using interface control documents and subcontractor interfaces using interface control drawings developed through joint working groups. The two primary management techniques were (1) an informal process perfected over the years by the professional staff, who had developed two operational aircraft together, and (2) a formal process managed by the chief engineer and the program manager.

The formal process worked exceptionally well. Every Wednesday, at the 7:00 a.m. chief engineer's meeting, each aspect of the design, integration, schedule, and systems engineering process was reviewed. It was imperative that the principal who presented the information be prepared and that there be no open actions with unresolved closure plans.

One particularly illustrative anecdote involved a schedule review. The schedule manager presented a list of over 500 tasks that were to be accomplished that week. The manager reported that all items were on track except for some small number of items. Of the late items, most had been resolved and there was a plan to finish the work and get back on schedule. For those unresolved items for which there was no current work-around, the names of the engineers responsible for correcting these problems were shown. On Thursday, the chief engineer visited the desks of the engineers and all the problems had been resolved! [1, 5 (numerous interviews)].

The Lockheed systems engineering process was fundamental to the functioning of the design team. In the 1950s and 1960s, it was commonplace for a design team to stay relatively intact within a company. The C-5A design engineers had worked together for years at the Lockheed facility at Marietta, Georgia, and knew each other well. The core design team, especially the senior subsystem engineers, grew up using the Marietta division's internal procedures and were mentored by those who perfected the processes. The team had experience on numerous developments and knew each other's strengths and weakness. Coordination and integration formed part of the basic design process, so procedures were followed automatically.[1] Thus, the Lockheed process had formal procedures, tools, and processes that were well defined, completely documented, and taught to all the team members; although their number and extent were less than those of today's systems engineering baseline. The informal systemic process used by the engineering, production, and management teams for the C-5A pervaded the industry teams and, therefore, integration was part of the basic work pattern.

The Air Force contract with Lockheed required the use of a PERT-TIME format to control the schedule [1]. This was the premier scheduling tool available at the time, but the systems engineering process within Lockheed required a much more detailed schedule methodology to track the many thousands of design and manufacturing details. Lockheed's scheduling system carried over 200,000 events, yet allowed flexibility in rescheduling items under individual control. When two groups negotiated a change to the schedule, the schedule monitors were so advised and entered the new schedule into the computer program, which was then made available to the engineers and managers.

Risk Assessment and Management

The risk management process used by Lockheed during the development phase was a subset of the systems engineering process and was conducted exceptionally well using the inherent workings of the systems engineering and design process systemic to the design teams resident at Lockheed Marietta. Systems engineering sub-processes, such as technical performance measurement and tracking, earned value, PERT-TIME schedule, etc., were conducted on a daily basis through the established relationships between and among the professional staff who had worked together on previous programs, such as the C-130 and C-141.

---

[1] Today, it is rare to find an experienced, complete company team that has performed three to five designs.

Each of the design groups was assigned the responsibility to identify risks, develop risk mitigation plans, and ensure that technical disciplines that would be affected by, or could affect, the risk, were included in the risk solutions. This responsibility included logistics, manufacturing, and operations. The chief engineer and all those who reported directly to him reviewed risks at the weekly chief engineer's staff meeting. The Wednesday morning meeting was the forum for presenting risk, reviewing the mitigation plan, and providing guidance, corrective action, and approval from the collective staff. These meetings were extremely important and the principals seldom missed them.

The program manager meeting was also held weekly. Everyone who reported directly to the program attended this meeting, which featured the same review process and discipline used in the chief engineer's meeting. The program manager was also shown the results of the systems engineering process and tracking of technical performance measures as a metric for progress of the design team.

The government System Program Office (SPO) delegated the risk identification and mitigation process to its engineers, manufacturing personnel, logisticians, and other professional disciplines. The staff within the SPO could review, monitor, and track the contractor's progress and assess the contractor's ability to meet the specification requirements. The procedure involved advising program management of the SPO's assessment of risk.

Flight Testing

The first flight of the C-5A occurred on 28 June 1968, 33 months after contract award, and initiated an era of flight testing with the Air Force and contractor operating as a combined flight test unit. The lesson in systems engineering, however, derives as much from the preparation for flight testing as from the actual conduct of the flight testing. Lockheed assigned Mr. David Dickenson at the Marietta facility to oversee flight testing [5]. He immediately configured a flight test team from the company that included representatives from all of the relevant disciplines: engineering, configuration management, ground testing, manufacturing, and flight operations. This multifaceted, multidisciplinary team was able to conduct all ground testing prior to the actual flight test using experienced people, all of whom played a key role in their respective technical disciplines throughout the design and production of the aircraft.

During the early engine runs, a special test facility was constructed at the contractor's facility and was staffed by both Lockheed and General Electric (GE) personnel. This facilitated early testing and troubleshooting and was instrumental in achieving a mature design for the engine prior to first flight. The ground vibration tests were also accomplished at the Marietta facility, with many of the engineers who designed the structure assisting in test setup and data reduction.

3.1 C-5 Learning Principle 1: Requirements

The first, and arguably most important, phase of the systems engineering process used in the C-5A program defined and documented the system requirements. Achieving a balance between the required operational performance and the design risk, within the associated cost and the stipulated schedule, was a major accomplishment. The process will be discussed so that the student can evaluate the methods used and the soundness of the approach compared to more modern applications of the requirements process.

Requirements Definition and Management

Requirements definition for the C-5A was a complete process in that it included all the necessary participants and integrated their inputs. It employed the systems engineering tools for mission effectiveness/operational analysis available at the time – the forerunners of today's modeling and simulation tools. Starting with the statement of the top-level functional goal, "move an Army division from CONUS to a distant location," the project team developed the lower level functional requirements. Drawing on the combined and integrated experience of the government users, operators, engineers, development planners, and technologists, as well as on the engineering design, conceptual analysis, and manufacturing capability of the aerospace industry, the systems engineering process balanced the user's needs with current design capability. The organizations cooperated, exchanged data, and debated alternatives, continuously narrowing the choices and communicating the evolving baseline to all team members [5 (Lusczek, Dvorscak)].

Communications

The C-5 systems engineering requirements process was designed to incorporate communication in all directions: upward to the systems management team, across to ensure integration of the user's needs during design and integration among the technical disciplines, and down to allocate requirements to the designers. The methods used to communicate requirements and issues among the operational user, the SPO, and Lockheed provide an excellent heuristic for predicting success. This phase of the systems engineering process culminated in a balanced, achievable, and integrated set of requirements that were fully understood by all parties, and that remained stable throughout the development of the aircraft. The C-5A program accomplished this task in a textbook manner. The organizations involved in requirements derivation are graphically depicted in Figure 3-1.

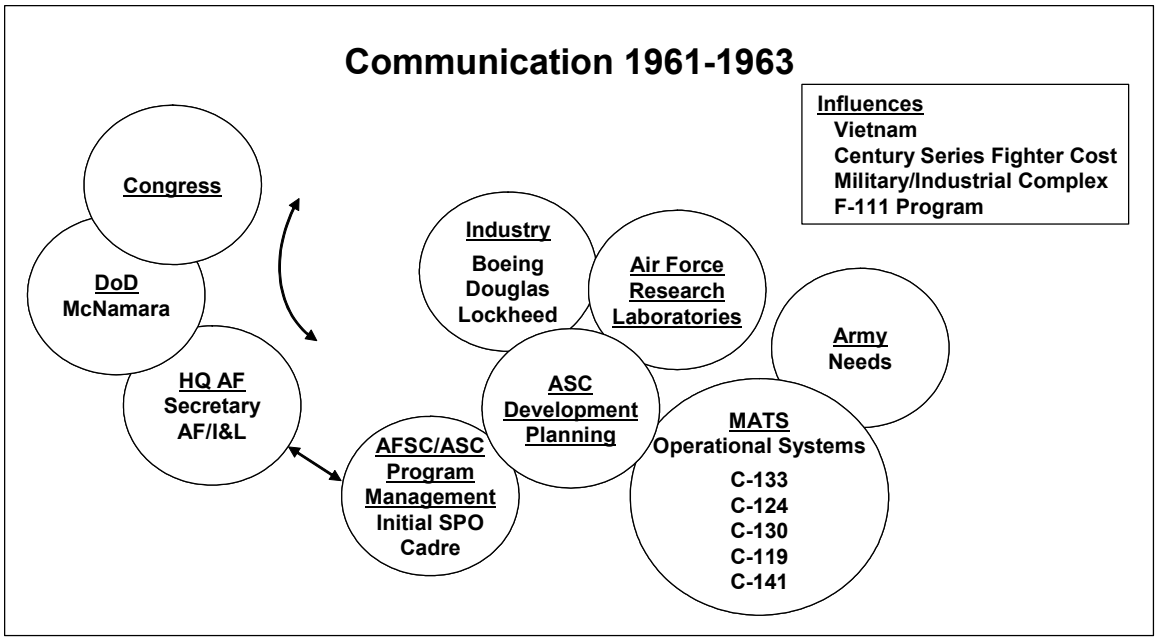

Figure 3-1. Operational Mission Analysis and Communications During Concept Exploration

The overlapping circles in Figure 3-1 are very important because they depict the hierarchy in the systems engineering leadership. This changed with time. For the concept exploration phase and during the mission effectiveness/operational analysis, the development planning organization led the process. During the design and development phase, the Air Force SPO was the dominant organization, but it led only the processes for which it was primarily responsible, while Lockheed served as lead for the contractor's primary processes. This underscores the importance of using the Friedman-Sage matrix to sort and define responsibilities as well as tasks. It is vital to understanding the organizational communications process for any program at the various phases.

The Air Research and Development Center (ARDC) – the forerunner organization of the Deputy for Development Planning at the Aeronautical Systems Center (ASC) at Wright-Patterson Air Force Base (WPAFB) – solicited and integrated the inputs from the stakeholders of the other organizations. External influences from two sources were integrated into the trade study process. The first of the external factors is indicated by the group of three entities depicted on the left side of Figure 3-1, all of which interacted with each other as indicated by the curved arrows. This group was instrumental because it influenced the Air Force leadership, which in turn provided program direction, as depicted by the arrow from the AF Secretary's office to Air Force Systems Command (AFSC). The second set of external influences came from the national and worldwide situations that existed at the time.

The communication between and among all the people in the stakeholder organizations on the right-hand side of the figure was excellent from the beginning of the program [5 (Ormsby, Goldfarb)]. This cooperative working relationship and an environment of open sharing persisted throughout all levels of the program, even during the height of the controversies over cost and weight.

Operational Effectiveness/Mission Analysis

Operational effectiveness/mission analysis studies represented the first steps in the systems engineering requirements process [3,4]. The purpose of this phase of the process was to develop a balanced set of achievable requirements, well within the current reach of state-of-the-art technology. The systems engineering process assessed the User's needs, determined whether the available technology was sufficiently mature to produce a practical design, evaluated the prime contractor's engineering/manufacturing capabilities, and performed operational mission effectiveness assessments.

Operational effectiveness/mission analysis studies covered range, payload, speed, and airport conditions, both at takeoff and landing. The entire cargo/transport aircraft community, the contractors, the development planners, the users, and the technologists were deeply involved in the assessment process. It resulted in the publication of the MATS Qualitative Operational Requirements (QOR) in October 1961 [1] and the System Operational Requirements (SOR) 214 for Heavy Lift Logistics Weapon System on 25 March 1964, and the release of the RFP in December 1965. Note that the whole process took seven years, starting with the early vision, to build the program consensus, develop the budget plan, and define the requirements.

The operational mission analysis was conducted under the direction of the major command, Air Material Command (AMC). Under AMC, the Air Research and Development Command (ARDC) was organized to include the Wright Air Development Center (WADC), which was responsible for all research and development procurement, including weapon

systems. WADC included a Plans office under the direction of Mr. Fred D. Orazio, Sr. [3]. The Air Force organizational structure that existed prior to the Packard Commission of the early 1980s and the Goldwater–Nichols Act of 1986 assigned responsibility for development planning for air systems within WADC (later Aeronautical Systems Division from April 1961 to July 1992, and Aeronautical Systems Center from July 1992 to the present). Led by WADC from 1956 to 1959, the Deputy for Development Planning initiated design studies and operational analysis to develop a range of vehicle sizes and missions various sized aircraft could accomplish.

WADC assessed the state of the art of technology relative to the top functional requirement of moving an Army division and their heavy equipment to a distant location. At one end of the spectrum was the current air transport fleet and the Navy ships. The maximum requirement at the other extreme would be to move the division in one trip halfway around the world. The initial studies examined the Air Force fleet size and the rather simple task of managing the receiving airport with the influx of Air Force airplanes and Army equipment. The second task was to study the locations of potential conflicts and the nation's ability to operate from bases close to those locations.

Given the worldwide operating capacity of the United States, the maximum distance to move the Army division was estimated at 10,000 nautical miles. This could be done in one trip of 10,000 miles by the transport fleet, with the attendant implications for the aircraft size to fly that far unrefueled, or within some number of refuelings. The trade studies eventually concluded that one refueling would be the most cost-effective solution. The requirement was then levied for both air refueling and a mid-mission landing/refuel/takeoff from an austere location. This latter requirement was a major driver for the design of the leading-edge and trailing-edge lift system and caused Lockheed to spend a greater number of engineering hours than initially bid to optimize the lift characteristics of the aircraft.

Derived Functional Requirements

The next step in developing derived architectural functions was planning for the environment at the landing site. The operational experience of both MATS and the Army dictated delivery of the equipment in close proximity to the front. The derived requirement to operate at an austere forward location with an unimproved runway drove a requirement to operate on a surface with a California Bearing Ratio (CBR) of 9[2] [1]. This produced a derived requirement for a high flotation landing gear configuration and defined the number, type, and size of the tires and wheels. The forward location also required anytime operation, which in turn demanded operation in high crosswinds, assessed as 35 kts. This, in turn, derived a need for crosswind gear capability, so the design incorporated landing gear bogies that could slue into the wind. Since the austere location would have little or no support equipment, the landing gear was complicated even more by incorporating a kneeling function to facilitate loading and unloading. Systems engineering accurately highlighted the cost, weight, and risk to the landing gear design, but despite this the User opted for the added complexity. Figure 3-2 shows the C-5A in its landing configuration as the aircraft would approach an unprepared field.

[2] The advertising brochures colloquially referred to this as the equivalent of a major league outfield surface for the landing strip.

Figure 3-2. C-5A Landing Gear Configuration

It should be noted that by the time the C-5B was designed in the late 1970s the user realized that operating this precious asset on unprepared runways near the warfront was neither prudent nor necessary, and the landing gear was somewhat simplified by removing the crosswind feature. This reflected a change of operational philosophy with time and experience more than a change from the original requirements. It was not cost effective to delete any of the other gear functions, but certainly by the time the C-5B was built the high flotation requirement for the landing gear would have been judged unnecessary. Had this been deleted from the original C-5A requirements list, it would have resulted in a far simpler and lighter landing gear configuration.

During the early operational mission analysis studies, the team assessed the feasibility of very large aircraft with takeoff weights as high as 3 million pounds. The purpose of studying large aircraft was to assess the technology required to design and build such vehicles and to assess the practicality of operating them in the real world [3, 5 (Lusczek)]. The study outcome narrowed the range of the aircraft weight to between 650,000 and 750,000 pounds, a large increase over the state of the art, but not a quantum leap over vehicles in the inventory or in development during the mid-1960s.

The Army established a desired range of vehicles and equipment to be transported, which included the largest tanks, fighting vehicles, and trucks in their inventory. This drove the requirement to accommodate outsized cargo, which became the basis for the C-5. A requirement for aerial delivery of both goods and paratroopers was stipulated, as was drive-on, drive-off cargo capability at both loading and unloading airport locations.

MATS, the operators of the planned system, had significant experience with the current strategic airlifter, the C-133. During the early requirements phase, MATS developed the performance requirements necessary at both takeoff and landing airports. The cruise performance and range were driven in large part by the ability of the C-141 to attain high cruise speeds for MATS missions.

Industry Involvement

The aerospace industry was involved in the early studies by providing assessments of conceptual designs and the technology readiness levels of the system and subsystems. By 1961, it was clear that the Air Force was committed to the C-X HLS – Cargo-Experimental, Heavy Lift System, as it was originally known. The Air Force and MATS had released the QOR in October 1961 and industry competitors started assembling teams to develop their concepts and prepare for the eventual competition to design and build the system. The three leaders in the competition, Boeing, Douglas, and Lockheed, conducted numerous conceptual design trade studies from 1961 to 1963. Lockheed, under the leadership of Robert Ormsby, performed configuration assessments to see if a new and innovative configuration could be derived that would provide a cost advantage and even capture the imagination of the customer (see Appendix 5 for a summary of the early systems engineering trade studies) [9]. Lockheed revisited and reviewed the configuration studies they had performed during the early C-141 assessment and found that the swept wing, "T" tail configuration remained the best overall approach to satisfy the requirements that were coalescing from the operational mission analysis.

System Architecture Development

The C-5A system architecture resulted directly from the requirements process. As previously noted, the top-level functional architecture statement was to move an Army division to the point of a conventional conflict in a distant country. The architecture tree of functional needs was derived from that need. The operational mission analysis continuously expanded the requirements tree until a complete set of system functions, down to the lowest level, was developed and documented. The features needed by the program were then made part of the requirements and stipulated in the contractually required weapon system specification and the subsystems specifications.

The weapon system specification and the subsystems specifications subsumed the Military Specifications in effect at the time. The flying qualities were required per Mil F-8785. The Mil Specs were modified as the mission dictated and incorporated in the specification tree. For example, Mil F-8785 was augmented as a result of extensive ground-based, pilot-in-the-loop simulator testing and pilot assessments of the responsiveness of such large, high-inertia vehicles. One particularly difficult requirement in the original specification was to achieve a roll angle of eight degrees in one second on powered approach. Flight simulations and flight test verification in a C-135 showed that the aircraft would not need to achieve this angle to correct for navigation errors after flying 5,500 nautical miles, breaking out from a 500-foot ceiling, and correcting the flight path back to the runway. The specification was amended to include a more realistic and perfectly adequate value of 5 degrees in the first second [5 (Sweeney, Ormsby)].

The contractor was required to show how they would implement the progressively allocated functional requirements in a design. The government systems engineering process tracked the ability of a design to meet the allocated functional baseline.

The Air Force mandated the use of the new AFSCM 375 manuals [7], volumes one through five, for the C-5A. The manuals stipulated features, processes, tools, and procedures that the contractor was required to employ during the design, development, and production of the system. These requirements and mandates as to how to manage the program had a large cost impact on the contractor, as the stipulations of the AFSCMs had to be addressed by specific management actions.

Requirements Management: SPO and Contractor

While Lockheed and the SPO used different systems engineering processes, they did work together, because there was still only one weapon system that both processes acted upon. The systems engineering process used by the SPO had the fundamental purpose of assessing how changes in the requirements stipulated in the contractual baseline affected the design. The systems engineering process operating within Lockheed's design teams allocated the contractual requirements of the system specification to the lowest level of the design. It was vital that the process transmit the impact on the system to the entire design team from top to bottom, including the subcontractors. Another essential feature of the process ensured horizontal, as well as a vertical, allocation of the functional requirements. If a conflict could not be resolved within the design, the prime contractor's systems engineering process had a mechanism to refer the conflict to the systems engineering process within the SPO for final resolution. The SPO or an authority higher than the SPO then made final decision.

The major responsibilities of the SPO and the government were to develop and manage requirements. They can be divided onto three areas:

- Develop and document the initial requirements set for the top-level system specification and the top-level system architecture.
- Trade off specification requirements versus design risk during development.
- Constrain requirements creep.

The Air Force SPO and Development Planning organization did an admirable job in developing and documenting the requirements and ensuring they were balanced and attainable. The SPO's performance in exercising their responsibility to balance the requirements with the design risk was less than stellar. The fear of reopening the fixed price contract with Lockheed was a factor, as was the attitude of holding the contractor responsible for the contract they signed.

Requirements were controlled exceptionally well during development. The problem that most plagues both management and engineering groups is requirements creep, but the C-5 succeeded in avoiding this damage. Creep comes from "over perfect" engineering: continuously trying to improve an acceptable design to make it better. Systems engineers must follow the mantra of "better is the enemy of good enough." The greatest contributor to requirements creep, however, is often the user. If personnel from the user community have constant access to the contractor, design changes will be continuous and never ending. The C-5 SPO team managed the inputs of non-SPO people by controlling all changes via the SPO's Configuration Control Board (CCB). Lockheed's process for controlling changes also used a CCB, but their first line of defense was the Chief Engineer design meetings.

C-5 Requirements Process Summary

The systems engineering process used to develop a balanced set of requirements during concept exploration was a model for the application of operational mission analysis. The organization responsible for developing the requirements took the lead and fully involved all the organizations that could affect decisions. All organizations that would be affected by the decisions were contributors. The requirements for the system were well balanced and the design and production were accurately judged to be feasible with the state-of-the-art technologies.

3.2 C-5 Learning Principle 2: Total Package Procurement Concept (TPPC)

The contract type for the C-5A was specified to be the new Total Package Procurement Concept (TPPC) championed by the Air Force and DoD. The TPPC contract was a firm fixed price incentive fee contract for the development of the system and a first production quantity of 58 aircraft (Run A). The contract also included an option for a second quantity purchase of 57 aircraft (Run B). Because of its impact on program cost, the relationship between the basic contract for Run A and the option for Run B is important to follow throughout this case study. The price for Run B aircraft was based on the price paid for Run A aircraft, but a cost acceleration clause allowed the contractor to recoup losses as the number of aircraft in Run B increased. There was also an option for a third production lot of 100 aircraft, called Run C, but it was never exercised because funding did not suffice to purchase all of the Run B aircraft.

TPPC was announced to the contractors and the Source Selection Team on 25 February 1965 as the acquisition process for the C-5A program. Aligning the contract and assessing the impact would delay the Source Selection by one month [6]. This was the first application of TPPC anywhere in the DoD.

TPPC was the acquisition reform of its day. Because it played a dominant role in the success and the failures of the C-5A program, its genesis is noteworthy[3].

TPPC was a new concept for weapons system procurement devised by the Honorable Robert H. Charles, Assistant Secretary of the Air Force for Installations and Logistics. The purposes were to enhance the competitive environment and to create incentives for cost-efficient programs that would reward contractors for controlling development and production costs. Secretary Charles had previously worked for McDonnell Aircraft Corp. and had a "...first hand view of the problems created by the lack of competition that existed under the contractual arrangements employed on weapons acquisition programs" [6, p. 13]. During the 1950s, contractors commonly submitted bids with an optimistically low price for development, but the average cost overrun by the time development and production were complete was 320 percent [6]. During the early 1960s many initiatives were discussed for increasing competition and controlling costs. Almost all the changes had an objective of better defining the total system cost, not just the development cost. The introduction of life-cycle cost – a vital prerequisite for any TPPC – was one of the lasting outcomes of this reform era.

Secretary Charles introduced his new TPPC at a management conference at Wright-Patterson Air Force Base on 25 June 1964 ([6, p. 21]). On November 21, 1964, Secretary of Air Force Eugene M. Zuckert proposed application of the TPPC to the CX-HLS, noting:

> I believe it is feasible to use this "life cycle" concept on this program. The CX-HLS is a subsonic transport. With respect to the airframe, there is no large advance in the current state-of-the-art, and the technological building blocks are in hand. The Air Force is able to specify the desired performance with precision and with reasonable expectation that this performance can be achieved. The program has already gone through exhaustive parametric studies (concept formulation), and will

[3] An excellent description of the rationale for the TPPC can be found in [6, pages 13-26], a thesis written by two AFIT students in 1970.

> have gone through project (contract) definition before development begins. There is adequate competition among both the airframe and the engine manufactures. [6]

Secretary of Defense McNamara officially approved the TPPC for the C-5A program on 25 February 1965. The impact of this decision has been discussed at length throughout the literature. Of all the comments by the numerous protagonists and antagonists, one of the most profound was made by Poncar and Johnson:

> A concept had now been developed to design, competitively procure, and scientifically manage a major weapons system from the outset through its operational life. It would also give assurance that performance requirements were tied to definitive cost commitments. To the uninitiated, the simple statements did not appear to have profound implications. In fact, the impact of such statements was not readily understood unless one fully appreciated the sophistication inherent in the complex weapons systems acquisition process. The advent of this new procurement technique forced complementary changes in planning, scientific management, budget, and systems engineering techniques which had a long-standing past. [6, p. 26]

Acquisition reform is ongoing. Decision makers must fully understand the programmatic impact of each reform, or the subtle features of well-intentioned reforms may well undo the very improvements they seek to make. The systems engineering process must include a thorough assessment of the impact of reforms. Commensurate with this obligation is the responsibility to make decision makers aware of potential pitfalls and risks.

Development Phase

The TPPC failed because it neither achieved the fundamental objective of developing an accurate cost estimate for the program nor controlled cost growth. It was, however, the first step in formulating the contract approach to address the system and life cycle costs. It also stipulated that the prime contractor have Total System Performance Responsibility (TSPR).

Cost Overrun

The C-5A program was plagued by cost overruns from the very beginning. The cost overrun was not unexpected by either the Air Force or the contractor [6, 8, 12]. The Air Force had predicted a most probable cost of $1.86 billion as opposed to the contractor's best and final estimate of $1.71 billion on 4 September 1965. The actual cost of the original contract grew by another $64 million by December 1965 [6]. No one estimated costs as high as the eventual program overrun to $3.5 billion for the development effort plus the 115 aircraft in Run A and Run B.

The enormous cost overrun had multiple causes. Key reasons included: (1) the original cost estimate was aggressively low, influenced by the contractor's expectation of an ancillary benefit in the form of follow-on for commercial air vehicle design; (2) the perceived low cost estimates of the competitors; (3) the redesign of the proposal baseline as the contract baseline in four days without an accurate assessment of the impact to the cost; and (4) the aggressively low contract weight empty guarantee, coupled with an underestimate of the effort the design/production teams would expend to achieve the value.

Volumes have been written about the C-5's cost growth; it caused the most controversy and angst over the system. It plays an important role in this case study because it resulted in termination before all the aircraft in Runs A and B were procured. Cost was a pivotal factor in the program because it was hopelessly understated – to the extent that the contractor had no chance of meeting the cost submitted in the proposal from the very start. The important lessons lie in what happened to the program because of the low cost estimate and the consideration of what might have occurred if the value had been attainable. Another equally important lesson derives from the significant amount of additional resources the government had to allocate to correct the problems.

The TPPC fixed price contract for development and the initial production run of 58 aircraft proved a fatally flawed strategy. Underbidding by all three competitors was known and acknowledged, but Air Force and DoD decision makers signed the contract anyway [10]. The prevailing attitude by the government during the first five years of the contract was, "Let's hold their feet to the fire; they signed the contract." There is no question that Lockheed's cost overrun was due in part to the intensive effort to design and manufacture parts and assemblies to the lowest possible weight [5 (Ormsby)], but this was not the dominant factor in the overrun [6]. In fact, the cost overrun of the C-5A program resulted from six primary factors:

- The TPPC failed to meet its objectives.
- Both the original proposal and the proposal as modified on 4 September 1965 contained an aggressively low cost proposal for the tasks.
- The aircraft redesign, accomplished in a mere four days, was inadequately reviewed and resulted in higher than expected technical risk.
- The guaranteed weight empty stipulation, with its attendant cost penalty in the contract, drove Lockheed over the engineering budget.
- The performance requirements for range and payload required an inordinate amount of testing, analysis, and refinement of the drag, the flap/slat design, and the flap/slat settings.
- The environment of the 1960s and the technological unknowns that existed during the design and development phase would have caused a program overrun no matter which contractor built the aircraft [6, p. 60]. High inflation, the demands of Vietnam, and technical difficulties previously neither experienced nor envisioned but related simply to the size of the aircraft led to unplanned additional effort.

3.3 C-5 Learning Principle 3: Guaranteed Weight

Interviews[4] with key personnel confirm that one element characterizes the systems engineering process during the C-5A design: the allocation of aircraft weight empty throughout the subsystems and structure of the aircraft. The allocation of aircraft weight empty to all the subsystem design teams played a crucial part of the overall program, first, because weight is always a vital technical design parameter for airplanes, and second, because the value was guaranteed in the C-5A contract. The contract included a large cost penalty to the contractor if any delivered aircraft exceeded the value.

[4] The people interviewed are listed in Appendix 2, Interviews.

Proposal Phase

The importance of early decisions in the life of a program cannot be over emphasized. The need for the systems engineering process to thoroughly consider potential consequences of seemingly simple decisions and to assess alternatives is never more important than during the source selection process and the time period leading up the contract approval.

Several events occurred during the proposal phase that would forever influence the outcome of the C-5A program. The systems engineering process did not adequately assess the potential impacts of programmatic decisions, yet those decisions affected the design, production, and operation of the system. The systems engineers recognized that technical trade offs were vital to the program. Equally important were decisions about technical design alternatives made between go-ahead and the preliminary design review. These were recognized to have long-term ramifications on the system and received the attention in trade studies required to fully assess the consequences of the choices. By the time the program reached Critical Design Review (CDR) the design was essentially finished and the remaining effort was expended in building the parts and assembly and checkout. Changes after CDR were difficult, expensive, and had a negative cost impact, but were made in the constant effort to reduce weight.

The Air Force decision to advise the C-5A bidders that claims made in the proposal by the offering contractor would be included in the final specification had far-reaching impacts on the design. Lockheed believed that Boeing had underestimated the weight empty of their proposed air vehicle and therefore felt compelled to propose an ambitious, but reasonable, estimate for the vehicle weight empty of 302,494 pounds [6]. By the proposal's own admission, the actual weight empty estimate was a larger 318,415 pounds for the baseline, which included a 5% growth factor. However, the contractor claimed the actual value of 302,494 could be achieved by realizing advances in technology, materials, and production techniques. The Air Force decided to place the lower weight empty value in the specification as a firm requirement and included a penalty clause in the contract that made the contractor liable for a penalty of $10,000 per pound of weight empty over and above the stipulated value for each aircraft. The contractor accepted the value in the contract! Compounding the impact of the decision to propose an aggressive weight empty, the contractor also proposed aggressive values for range and payload, which the Air Force also converted into firm specification requirements. For the design engineering process these decisions had the consequence of removing most, if not all, of the technical management reserve that the design team could use to make trade offs between subsystems, design approaches, and operational requirements.

A second major influencing event occurred following the source selection. The competing contractors were briefed on the Air Force's evaluation of their proposals in late August 1965. The purpose of briefing each contractor separately was to prepare for a final negotiation on specification requirements and for the contractor's best and final offer on cost. The Air Force evaluation team advised Lockheed that their airport performance, specifically takeoff distance, was inadequate to meet the Air Force operational requirements. The evaluation team calculated that the Lockheed wing was too small and that the leading edge and trailing edge flaps would provide less lift than estimated in the proposal. To stay competitive, Lockheed redesigned their aircraft in four days, in effect negating much of the careful balancing of the design represented in the original April 1965 proposal. The new configuration increased the leading-edge flaps to full span, changed the design of the trailing-edge flaps, and increased the wing area from 5,600 square feet 6,200 square feet. In the same four days, the carefully

balanced and well-integrated cost, schedule, and performance baseline of the original proposal was recalculated and resubmitted. Lockheed agreed to change their design, increased the specified weight empty in the new proposal from 302,494 pounds to 318,469 pounds, and raised their target cost estimate from $1.65 billion to $1.71 billion. Because of the short time available to assess the impact of the changes, however, these changes fell short of what was eventually required.

The third complicating factor during the proposal phase was Lockheed's decision to allocate the smallest possible cost for the development and production costs. This corporate decision was influenced by the benefit that the company could realize from future contracts for a large civilian transport aircraft. All three of the competing contractors were planning on such a synergy, so that much of the C-5 effort would underpin a commercial venture for a modern large airliner. In fact, technology based on the C-5 gave birth to the Douglas DC-10, the Boeing 747, and the Lockheed L-1011. However, Lockheed never received the total benefit of winning the C-5A competition [5]. Their proposed price was far lower than would be required to successfully complete development and production of the C-5A aircraft, and Lockheed did not realize a direct and substantial benefit to the L-1011.

Effect of Guaranteed Weight Empty

The inability of the design to meet the required fatigue life can be traced exclusively to the Air Force's insistence that the contractor meet the required guaranteed weight empty. As noted, the Air Force would not accept delivery of any overweight airplanes without a punitive cost penalty to the contractor. However, Lockheed contributed to the problem because of the low estimate for weight empty and the insufficient growth margin. The Air Force included the guaranteed weight empty in the specification because of the belief that lower weight empty means lower costs, and because of the difficulties the DoD had experienced in defending the F-111 program.[5] Finally, the Pentagon held to the righteous view that the government should hold Lockheed responsible because they had signed a contract and should hold them to their commitment [5 (Ormsby, Smithers, Wood)].

The weight empty was problematic from the very start of the contract and was exacerbated by the drag. Wind tunnel testing in October 1965 showed far more drag than the contractor had predicted during the concept exploration assessments. Drag was too high by 41 counts. (A count of drag is aerodynamic jargon for 0.001 of drag coefficient.[6]) During the next months, Lockheed redesigned the fuselage fairings, the pylon fairing, and the landing gear pods and finally reduced the drag to 0.0256 by their estimate, but the added fairings added 3300 pounds of weight [6, 9]. The normal growth of weight from go-ahead to first flight also started to show itself. Historically, weight grows by 6% to 10%, depending on the degree to which the technology state of the art is challenged, as the design evolves to CDR and again during production as necessary and desired changes surface.

---

[5] While a lighter aircraft will in general be less expensive on a dollars-per-pound basis, it is not so for a fixed set of requirements. For a given set of requirements, a lighter aircraft will be more expensive because of the added effort to over-constrain a technical parameter that would naturally seek its balance in the whole set of system requirements.

[6] The government team's evaluation of the drag during the source selection predicted a drag coefficient of 0.0265 or 265 counts versus the contractor's claimed 250 counts.

The SPO was well aware of the unrealistically low weight value in the specification, the small likelihood of meeting it, and the impact it exerted on cost and fatigue life. To determine how the contractor was addressing the problem and how it could be brought under control, the SPO sent Lockheed's program manager a letter on 5 January 1967, asking for a position from the company on performance. The contractor did not respond to the letter [6]. A second letter was sent on 13 January, and again was never answered. On 23 January 1967, the program manager met with the SPO at WPAFB and asked that Lockheed be allowed to change the engine thrust rating at sea level from a hot day to a tropical day. He also promised that Lockheed would manage GE to a higher thrust engine – from 41,000 pounds to 50,000 pounds thrust – at a cost increase to the government of only $5.12 million and would meet all performance requirements, , and asked that the SPO to remove the weight empty from the specification [6]. Because the Air Force could see no benefits accruing to the government from the changes, the SPO denied the request. The senior Air Force leadership in the Pentagon concurred with the SPO.

On 1 February, the SPO sent a cure notice to the contractor, tantamount to a definitive statement that the government was on the verge of canceling the contract. Lockheed never brought the weight up again, immediately removed 6,000 pounds from the wing (see Figure 3-4) and responded to the cure notice by assuring the government that they would meet all performance requirements of the specification. In short, the net result of the contractor's implementing their responsibility under the TSPR clause of the contract and highlighting a major design risk to the SPO was to incur a cure notice.

Effect of Guaranteed Weight Empty on the Design

The story of the weight empty on the C-5A provides a wealth of insight into the aircraft design process and the application of the system engineering process. The specification included very demanding aircraft performance requirements as well as a demanding weight empty, and the Air Force insisted on near-perfect efficiency in the design and performance of the aircraft, leaving little room for trade off between requirements and weight as the design matured. The Air Force's reluctance to trade off any of the demanding requirements set the stage for the C-5 weight problems that were to follow.

As previously described, during source selection the Air Force notified all competitors about various proposal deficiencies that needed to be corrected and resubmitted and gave them only four days to review, refine, correct, and resubmit the proposals. Despite the many months of work developing initial design proposals that accurately described aircraft performance and specifications, each competitor was forced to make serious changes in a matter of days. The Boeing aircraft required few changes, the Douglas aircraft was judged deficient, and Lockheed, the ultimate winner, made considerable changes to the wing, leading-edge flaps, engine thrust reversers, and inlets. It was impossible to replicate all the analysis, testing, and data that had gone into the original proposal in four days. This rush to contract contributed to a contractual guaranteed weight empty that was unattainable.

Problems in meeting the guaranteed weight empty requirement ultimately resulted from the approach Lockheed used to produce its weight estimates for the initial design proposal, the revised proposal guaranteed weight empty, and the expected weight growth. Lockheed management applied a 5% reduction factor to the originally developed weight empty to arrive at the original proposal value of 302,495 pounds. This factor was extrapolated from smaller aircraft and assumed technological advances that would lead to future weight savings. To

account for the unknown weights of the redesign that occurred in the first four days of September 1965, Lockheed adjusted the new guaranteed weight empty to a value of 318,469 pounds. This figure was based on an estimate for the new wing area structure and flap/slat changes. Had the proposed new weight value been based on the engineering estimate without the 5% reduction, the contractor would have retained some design flexibility. After the months of analysis that had gone into achieving the weight estimate for the original design, Lockheed took a daring risk to include the weight of the redesign in the 318,469 pound estimate, a decision that would plague the development of the C-5 for the remainder of the design program.

The expected weight growth used in determining the target weight of the aircraft was allocated on the basis of experience with the C-141. However, these allocations were fundamentally flawed because they were based on skewed guaranteed weight empty. Table 3-2 shows the computations of the target weight while Figure 3-3 shows the track from contract award to first flight.[7]

Table 3-2. C-5A Post Design Weight Analysis Report, Vol. II [11]

AIR VEHICLE TARGET WEIGHT DERIVATION

	WEIGHT - LB
ORIGINAL OPERATING WEIGHT	323,904
1. Allowance for growth prior to first flight = 4% x 291,329 (Controllable Weight)	-11,653
2. Allowance for manufacturing variation and growth from first flight to first delivery (Vehicle No. 9) = 1½% x 323,904	- 4,858
3. Allowance for growth from first delivery to delivery of Vehicle No. 58 = ½% x 323,904	- 1,619
AIR VEHICLE TARGET WEIGHT (INITIAL EDA RELEASE)	305,774

The goal of the target weight calculation was for the "air vehicle to be initially designed to a weight level sufficiently low to permit reasonable weight growth without exceeding guaranteed weight at the time of delivery" [11]. Weight growth allowances of 4% of the controllable weight, 1.5% for manufacturing variations prior to first flight, and .5% for basic vehicle weight growth account for an initial target weight that is approximately 5% below operation weight (OW). In guaranteed weight empty terms, this initial target weight was over 2000 pounds less than that listed in the original proposal. If the aircraft had not been redesigned,

[7] Note that Figure 3-3 and Table 3-2 list operating weight instead of guaranteed weight empty. The operating weight for these tables is equal to guaranteed weight empty plus 5435 pounds of operating equipment. This same difference will reappear in Figures 3-4 and 3-5.

this methodology would have been a logical way to meet the goal. However, the redesigned wing, coupled with the aggressive weight goals, made meeting the guaranteed weight empty goal almost impossible.

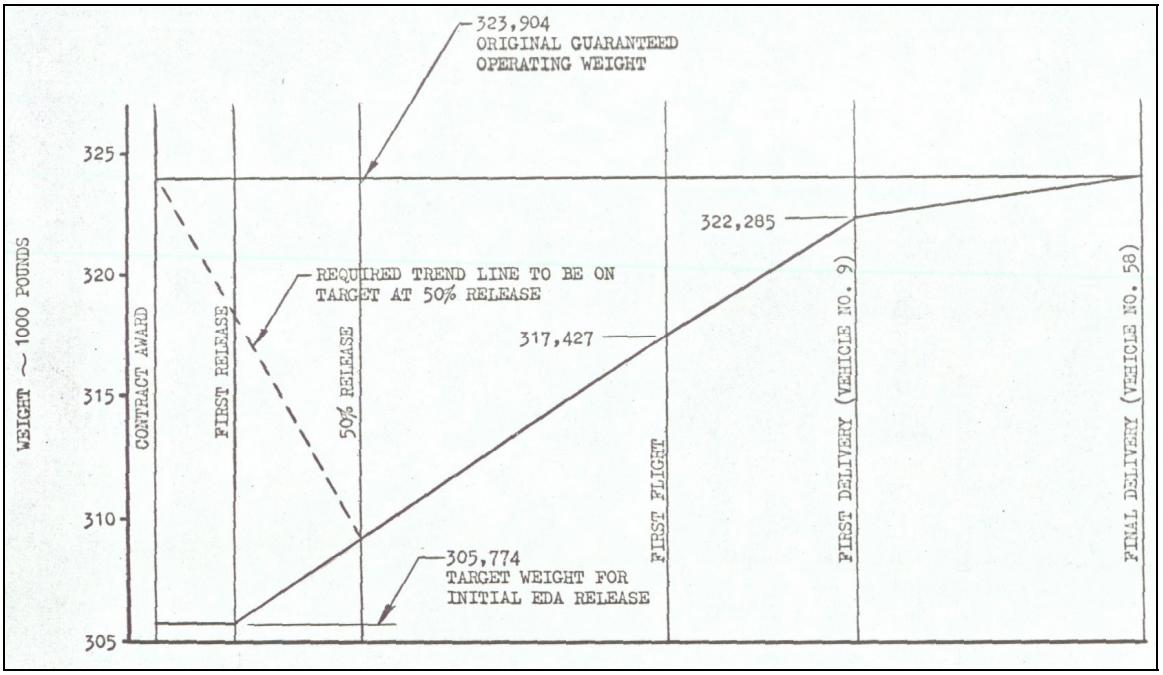

Figure 3-3. Lockheed's Projected Weight Track vs. Phase [11]

In mid 1966, when the impacts of the redesign were better understood, the SPO recognized and alerted Lockheed to the problems. Lockheed's requests that the SPO increase the guaranteed weight empty requirement by 14,000 pounds were denied, as were requests to pursue other possible solutions in meeting requirements such as increasing engine thrust. When it became clear that the Air Force had no intention of making any design tradeoffs pertaining to weight and performance, Lockheed began an extensive and ambitious program of monitoring, controlling, and reducing aircraft weight.

Lockheed's weight reduction program consisted of three distinct phases, each spanning a specific time in the design and development process. The first phase, already in progress when the contract was awarded, was to terminate at the completion of the preliminary design. The second phase continued from that point to the first flight, and the third phase was to end when the first full specification C-5 was delivered. Originally structured to concentrate efforts on monitoring and controlling weight growth, it evolved into a plan dedicated primarily to reduce weight and cost.

During phase I, the target weight allocations were broken down and distributed to the many functional design groups. This breakdown included specific job packages so that each team could clearly see the goals. Lockheed developed procedures to use the target weights and allocations as a control over the release of job packages for the design: no jobs were to be released that were over the target weight. The efforts to reduce weight became more challenging when further detailed analysis dictated configuration changes that drove revisions to the weight allocations. Design groups found themselves having to do more with less allowance for weight. Red and Gold flag meetings consistently monitored the progress of the efforts [11].

One approach to allocating weight among different areas was the creation of two reserve weight funds. If a job was completed under weight, half of that weight was put into each fund. One fund was used as a source of allocation for future weight growth, and the other was for jobs not likely to be completed under target weight. Despite their utility, both reserve funds were cancelled and transformed into a Target Weight reserve fund that served to accomplish the same goal.

In addition to the weight meetings that occurred on all levels during the development, Lockheed had programs to encourage innovative weight reduction ideas among employees. The first program lacked incentives, but still managed to gather over 1700 ideas, of which 64 were incorporated for a weight savings of approximately 4000 pounds. This program was replaced at 50% design release with a program that gave $200 per pound to employees with weight savings ideas that were eventually incorporated into the aircraft [11]. Though records for the payout and weight saved were not well maintained, Lockheed stated this program was worthwhile.

Other mechanisms to restrict and reduce weight during phase I included controlling the nominal thickness of aluminum sheet metal, chemical milling of parts to remove excess material, and monitoring the thickness of paint at application. Lockheed also developed programs for contract vendors to meet weight target allocations or face penalties for overweight deliveries. These and the many other aggressive weight reduction programs still fell short of enabling Lockheed to meet its target at 50% release.

Phase II was implemented during production at a time when it became clear that extreme measures had to be taken to meet guaranteed weight empty. It was equally aggressive, and included some of the same efforts seen in the previous phase. A Red Flag/Gold Flag report led to the "Save Cost and Limit Pounds" program , called SCALP. SCALP combined the weight and cost relationship to evaluate parts considered for weight reduction. It devised three clear guidelines. Changes of five pounds or less had to cost less than $40 per pound to implement, and changes of more than five pounds less than $75. The last guideline gave special priority to changes that saved cost and weight. High cost and weight areas of the aircraft were reviewed using these principles to further the weight reduction efforts in an affordable manner. Because this program was initiated at the completion of the stress analysis, it was applied to many over-strengthened areas for a large weight savings.

The final phase of the weight reduction efforts carried over many of the same programs over from both phases I and II. They included monthly Red & Gold reports and meetings to monitor weight and cost and the continuation of the SCALP program on a limited scale. Because phase III occurred during flight test, any changes with large manufacturing impacts were not considered programmatically feasible.

The weight reduction efforts were so concentrated on conserving cost that they compromised the ability to meet other requirements. The negative consequences of the weight reduction efforts for the "over strengthened" areas became very apparent after the 1969 static test failure of the wing at 125% of the design limit load. A wing that had been thoroughly and meticulously designed for the original proposal had borne a large burden of the weight reduction efforts on a heavier aircraft. From the estimated weight report, in the time frame starting with the 60% design release point and proceeding to the actual weight of the ninth aircraft, the overall weight of the wing was reduced by almost 4000 pounds, or about 4.5%. At one point in the

wing's development, it had reached a low weight of 78,100 pounds, 8% below the weight at proposal. The progression of the wing weight can be seen in Figure 3-4.

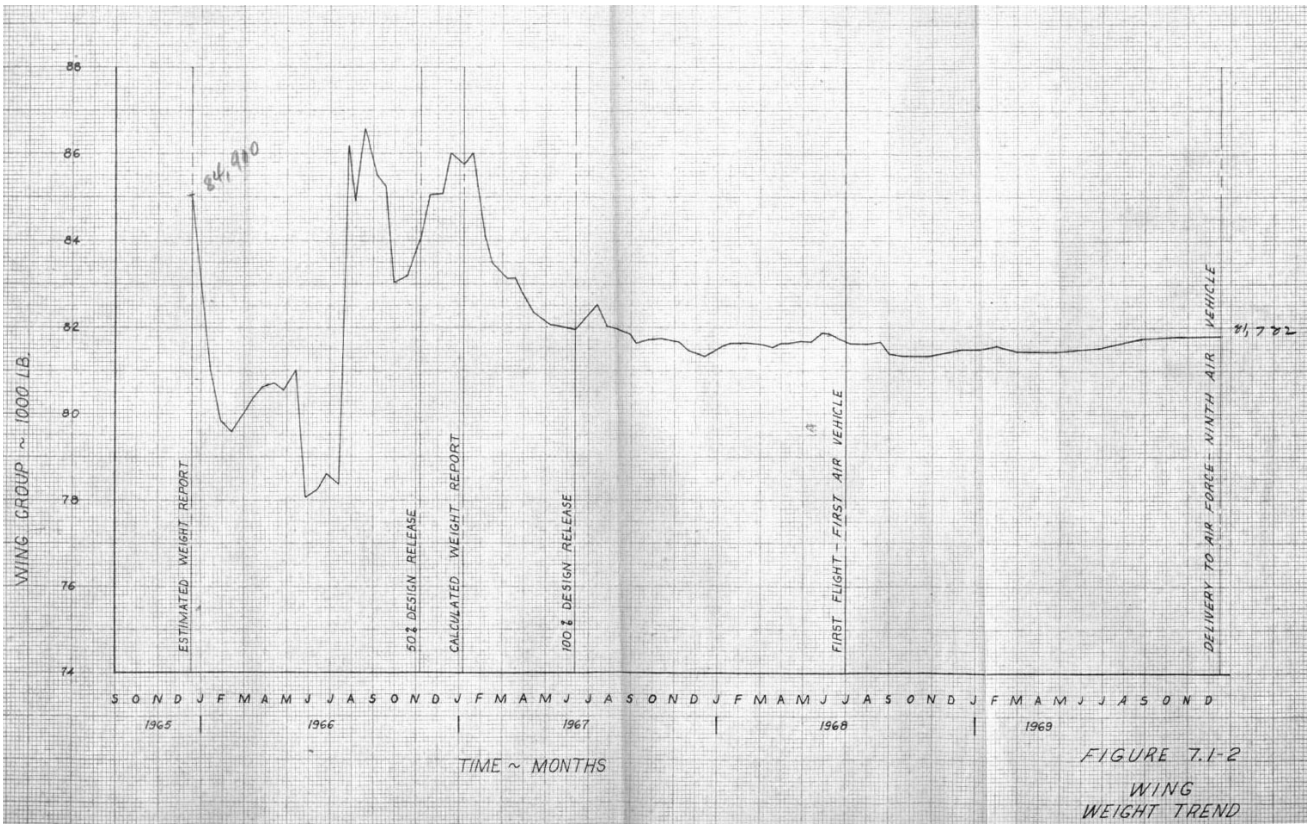

Figure 3-4. Actual Weight Data for C-5A Through the Ninth Delivered Aircraft [11]

The overall aircraft saw a low guaranteed weight empty of 310,000 pounds in July of 1966 before the impacts of the redesign were fully understood. The guaranteed weight empty then immediately increased to almost 323,000 pounds before Lockheed again tried to reduce system weight. All of the working group weight trends can be found in Reference 11; the data shows that the wing, tail, and control surface groups all demonstrated very significant decreases in weight, while the weight of the aircraft, specifically the body, showed considerable increases. The summary data for aircraft total weight is shown in Figure 3-5.

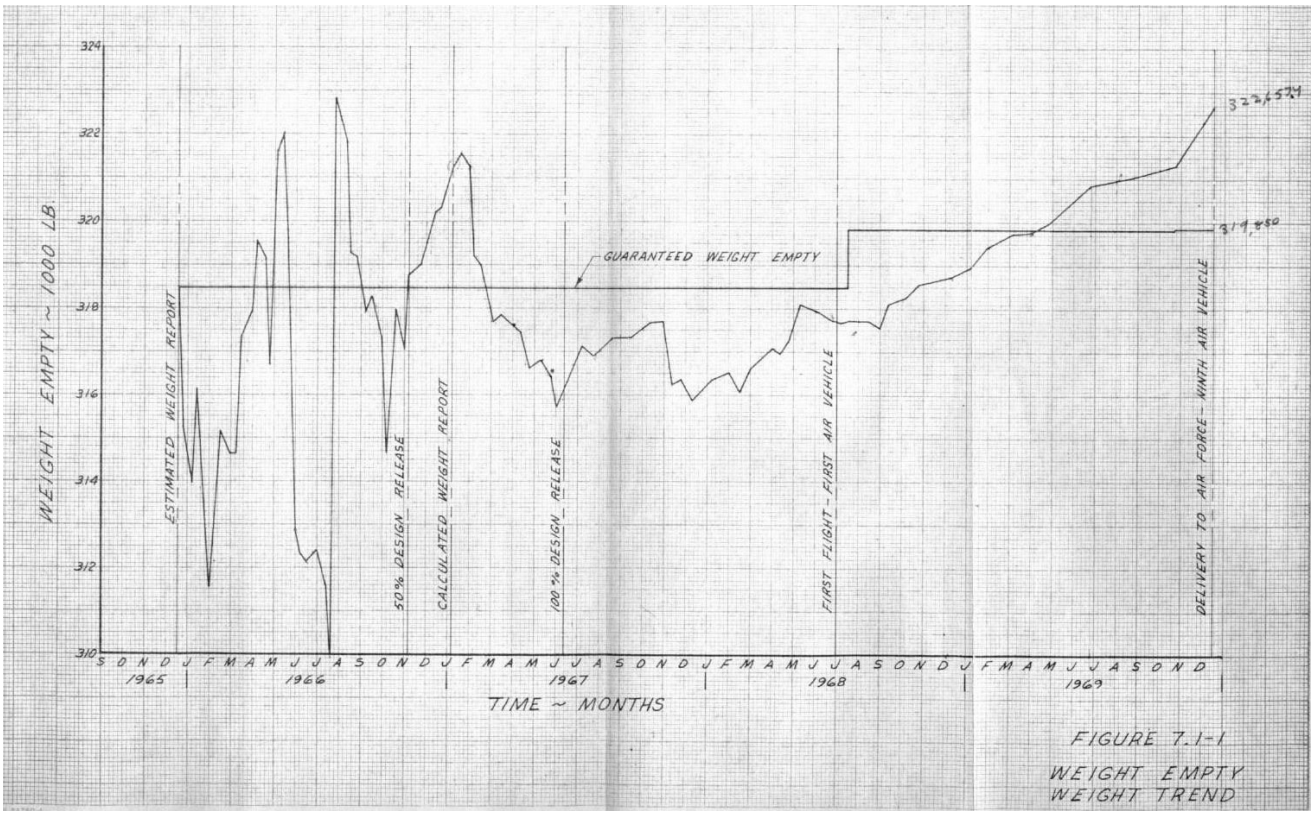

Figure 3-5. Actual Total Aircraft Weight Data Through the Ninth Aircraft [11]

During the period that followed the second static test failure in March 1971, it was determined that payload and maneuvers used throughout the operational fleet of C-5 aircraft built under the original contract had to be limited. Additionally, the widespread fatigue cracks appearing in the fatigue test articles and in the test aircraft forced the SPO to issue restrictions for maneuvers, payload, operations in turbulence, and ground-air-ground cycles. The new limits on operational usage yielded a service life prediction of 8,000 hours, far short of the required 30,000 hours of life at a more severe usage spectrum.

Lockheed's new wing design of the late 1970s would remedy this problem via retrofit. The completed wing redesign brought the service life of the C-5A up to the design specifications and the aircraft weight to a guaranteed weight empty of 332,500 pounds. Ironically enough, this weight value is just less than 5%, or about 14,000 pounds, over the original guaranteed weight empty of 318,469 given in the second proposal. Had Lockheed been more conservative in estimating the revised guaranteed weight empty and provided a more typical growth factor to the revised guaranteed weight empty for the contract, in all likelihood the weight empty and the fatigue requirements would have been satisfied. On the other hand, the Air Force's unwillingness to accept tradeoffs or any deviations from the contract contributed to the short service life.

The weight issues in the C-5 program underscore the importance and the implications of decisions that at the time seem to have small consequences. In this case, the problems were further compounded by the lack of customer flexibility during program development. The C-5A

program took weight monitoring, weight control, and weight reduction efforts to the extreme and did a good job of creating the framework of how the process should work.

New Weight Allocations

After the SPO rejected Lockheed's request for weight relief and issued the cure notice, the design groups received new (lower) weight allocations. The result was far-reaching. The weight allocation for the wing group design team was reduced from 85,750 pounds in January 1967 to 82,000 pounds in June 1967 as shown in Figure 3-4. The wing design team used a design stress level 40 percent higher than industry-accepted practices for transport aircraft and 40 percent higher than those used in the design of the C-141 wing.[8] Friction-fit, taper-lock titanium fasteners were used extensively in the wing. So precious was every ounce that the manufacturing process stipulated a 32-step chemical milling process for the wing skins. Lockheed implemented numerous innovative initiatives during the late design and early manufacturing timeframe, some of which were untested on previous applications. Because of the schedule requirement to fly in April 1968 and an $11 million penalty for late deliveries, there was little time for risk reduction assessments and tests in the laboratory. Consequently, many of the new changes were implemented for the first time on the production vehicles.

Aircraft Weight Empty and Its Effect on Cost

The impetus to place a guaranteed aircraft weight empty requirement in the specification of the C-5A contract came not only from the controversy over weight increase in the F-111 program, but also from the classic relationship between cost and aircraft weight empty. All three of the important cost values – development cost, production cost, and life-cycle cost – increase with aircraft weight empty. Most of the cost models that existed in the 1960s and 1970s heavily favored weight empty as a dominant parameter in estimating a project's most probable cost. The trend line clearly showed that a lighter aircraft would be less costly.

The subtle danger of using this obvious trend without fully understanding the implications of the behavior of weight at each specific point can lead to a faulty conclusion. The behavior of cost and weight does not follow the trend line once the aircraft is selected to meet a specific set of requirements. Weight empty may vary among the different aircraft design approaches companies propose to satisfy the set of requirements (wing sweep, number of engines, "T" tail, materials, etc.), but the variation is generally small and is part of the scatter around a curve drawn through the cost-versus-weight data points.

The C-5A serves as a good example to explain the behavior of weight and cost about a specific point. For any given set of requirements, such as those derived for the C-5A, and for the selected aircraft design approach of Lockheed, there is a weight empty that would result from the systems engineering process. As the systems engineering process balances the aircraft features or engineering parameters, such as drag, thrust, and cost (development, production, and life-cycle), to satisfy the specified performance requirements for range, payload, cruise altitude, cruise Mach number, takeoff distance, and landing distance, it derives the feature or parameter of weight. The resultant weight empty would be the weight that should naturally evolve. Thus, the

---

[8] The wing design was conducted in England because of the shortage of engineers available to Lockheed in the United States. They performed admirably and were an outstanding team, led by Lockheed engineering manager Ed Gustafson [1].

solid linear trend line in Figure 3-6 is actually made up of many different aircraft empty weights, each derived from systems engineering processes to satisfy that particular aircraft set of requirements.[9] Clearly, if the any of the requirements in the selected set change, the cost and weight would vary along the trend line.

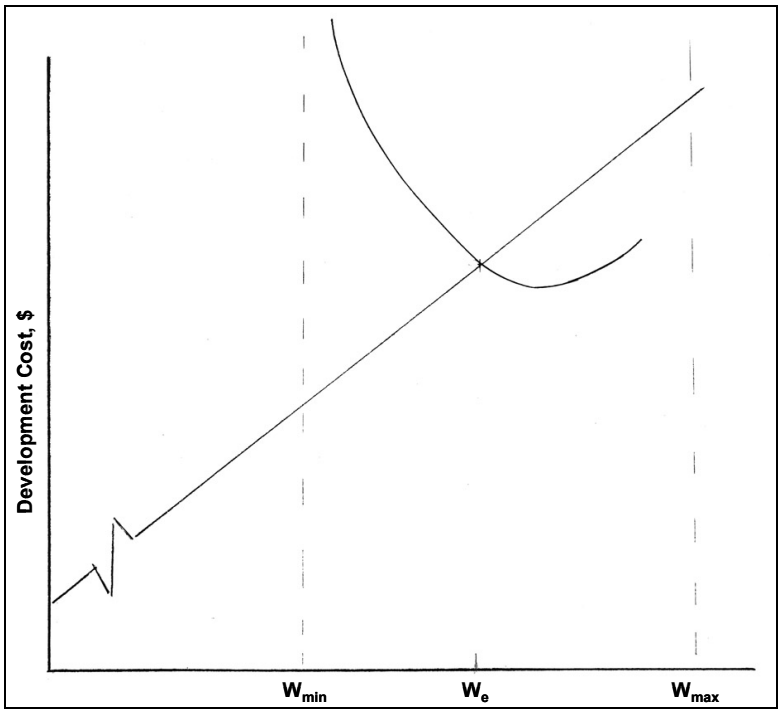

Figure 3-6. Cost Behavior as Weight Changes

Examine what would happen if a feature of the design, such as the empty weight, is arbitrarily elevated to the level of a requirement at the same priority as a true requirement, such as payload or range. Consider a fixed set of performance requirements, n, which exists in a fixed space, K. A variable set of features or parameters for each design approach exists to satisfy the set of requirements, n. One of these features is the weight empty, W_e, that would normally evolve from the balanced application of the systems engineering process for the specific configuration. The solid line in Figure 3-7 represents all the W_es that resulted from aircraft designs that met their sets of requirements, n_1, n_2, n_3,.....n_n, in K. This trend is real, because it is plotted from actual data, and, if used as plotted, it is an accurate indicator of the relationship between weight and cost. However, if the set of requirements is fixed and one of the parameters of the design is artificially managed, the trend line is no longer applicable because that is not how the solid line was derived. Now the relationship has to be reassessed.

In fact, the relationship between weight and cost is nonlinear when the set of requirements is fixed and weight is artificially changed. Postulate what happens if some external force, D_p (representing a change of pressure on weight), is increased at that W_e. For the specific

[9] New materials and manufacturing techniques will change W_e, a consideration Lockheed used when the proposed empty weight was 5% less than the value derived from the parametric estimate.

aircraft, the weight will go down, moving to the left. But to save weight, extraordinary design and production techniques will be required and these are more expensive than the design and production approach the systems engineering process would have developed for the initial W_e. So as the weight empty decreases, the cost increases! As D_p increases further it becomes more and more difficult to reduce the weight, until finally the cost increases asymptotically to the minimum possible weight, W_{min}. There is also an extreme negative impact on the schedule, because work will expand and be more difficult to accomplish. Eventually, one of the requirements in the set, *n*, will be breached, as depicted as the curved line in Figure 3-6. In the case of the C-5A, static strength and fatigue life were no longer attainable.

Note what happens to the cost as the design moves away from W_e if the pressure on weight decreases. Initially, as weight increases, the cost decreases. However, this only occurs when the increase is small, because the cost of raw materials will eventually drive cost up with increasing weight. When weight increases, it is only a matter of pounds before one of the requirements in the set, *n*, is breached. Thus, allowing weight to be unconstrained may seem attractive at first, but it will result in exactly the opposite results than those desired.

The actual controlling factors on weight empty are the set of requirements, *n*. As weight decreases, eventually system requirements will be breached. In the case of the C-5A, the static strength and the service life requirements were violated. Had the weight been allowed to grow, one of the performance requirements (range, take off distance, etc.) would have been breached. This was exactly the SPO's concern and was a factor in not yielding the weight allowance sought by Lockheed in January 1967.

Systems Engineering Actions During Weight Growth

The systems engineering process effectively allocated the guaranteed weight empty to the design groups and developed processes by which design teams and production teams were rewarded for saving weight. The problem that faced the process, the design team, and the production floor was that the weight allocation was inadequate and inconsistent with the budget allocation.

The structural designers adopted a rational strategy in face of limited weight relief: design the structure for ultra light weight, design close to the margins (and they all knew the design was close to the margins), and enter the test phase knowing that strength and fatigue "hot spots" were inevitable [5 (Ormsby, Smithers, et al.)]. The approach was based on the premise that the number of hot spots found during testing would be limited to a few areas that could be relatively easily repaired through retrofit. In fact, this strategy worked well for the fuselage, landing gear, vertical and horizontal tails, wing leading-edge slats and supporting structure, and wing trailing-edge surfaces and supporting structure. The pylon and the basic wing structure, however, experienced extensive fatigue cracking and were replaced in their entirety.

The decision to place the guaranteed weight empty in the contract constituted one of the glaring weaknesses of the program. As Lockheed attempted to meet the aggressively understated weight guarantee stipulated in the contract, the situation compounded negatively at every turn. Lockheed's systems engineering process only predicted that the weight could very well be exceeded and there would be a commensurate impact on program cost, payload, and airport performance. At no time did the process attempt a quantitative projection or even consider a range of potential outcomes. Thus, it only addressed qualitative concerns, thereby leaving the decision process in the hands of others.

3.4 C-5 Learning Principle 4: Independent Review Team

The systems engineering process employed by the Air Force SPO and the systems engineering process employed by Lockheed were vastly different. The SPO managed the requirements and the contractor managed the design to meet the requirements. If the design could not meet the requirements, cost and schedule risk increased exponentially as the disparity between the expected and estimated performance increased. The SPO's responsibility was to be technically astute enough to understand the implications for the design levied by the requirements as a whole (operational effectiveness) and by each requirement (risk). Lockheed's systems engineering process, used in conjunction with the design process, highlighted the design risk and the consequences that achieving the specification performance had for technical, cost, and schedule risks. When the conflict between the requirements and the design surfaced, the SPO assessment and systems engineering process should have been able to evaluate the reduction in performance relative to the overall mission and the ability to complete the fundamental job at hand, i.e., move an Army division's equipment to the war zone.

Cure Notice and the First Two IRTs

During the latter half of 1966 and into January 1967, Lockheed actively expressed to the SPO the advantages to the program if the SPO would remove the guaranteed weight empty from the contract. The contractor also requested authorization to manage and fund GE by an additional $5.12 million to increase the thrust to 50,000 pounds from the GE–Air Force contract value of 41,000 pounds[10] [5 (Swisher, Ormsby, Posson); 6, p. 99]. Following the SPO's refusal on 23 January 1967 and the confirmation by the senior Air Force leadership in the Pentagon, the SPO issued Lockheed a cure notice on 1 February 1967.

The impact on Lockheed's engineering process has already been described. As an additional response to the cure notice, Lockheed chartered an internal review team (IRT) to assess the design for the company and the SPO. Headquarters Air Force also requested an independent assessment and Maj. Gen. James T. Stewart, ASD/CC, tasked the Defense Advisory Group (DAG) to form an IRT, which conducted the review during March and April 1967, and concluded:

- That the contactor is doing a competent, responsible, and in many areas, an imaginative job;
- That all the specified performance except landing distance appears to be within reach, as judged from the drawing release point which is estimated as corresponding to the 75 percent of the final empty weight. The landing distance, however, is likely to be exceeded by about 250 feet;
- That the empty weight as a guaranteed item is likely to be over specifications by about 4,000 pounds;
- That continued vigorous efforts in all areas is required; all the performance must fall on the optimistic edge of the calculation accuracy range, before the guarantees can be

[10] General Electric agreed with the Lockheed proposal and was present at the meeting. They felt the need to stay in competition with Pratt and Whitney for the Boeing 747 development. The weight was increasing on the 747, so Boeing had asked P&W to increase thrust to maintain system performance:

met, and improvements in one area are likely to be required to compensate for falling somewhat short in one of the others [6].

After the two IRT assessments, Lockheed's reconfirmation of the commitment to meet all requirements, and the new weight allocations to the designers, the program proceeded toward full-scale structural ground testing and the flight test program.

Validation and Verification: Development, Flight, and Operational Test

The development test process required extensive laboratory testing to prove the design, using buildup tests from component to subassembly to subsystem. Both static and fatigue tests were required for the full-scale aircraft structure. The full-scale static test article for the structure is shown in Figure 3-7 [12]. The landing gear static test article was a separate assembly.

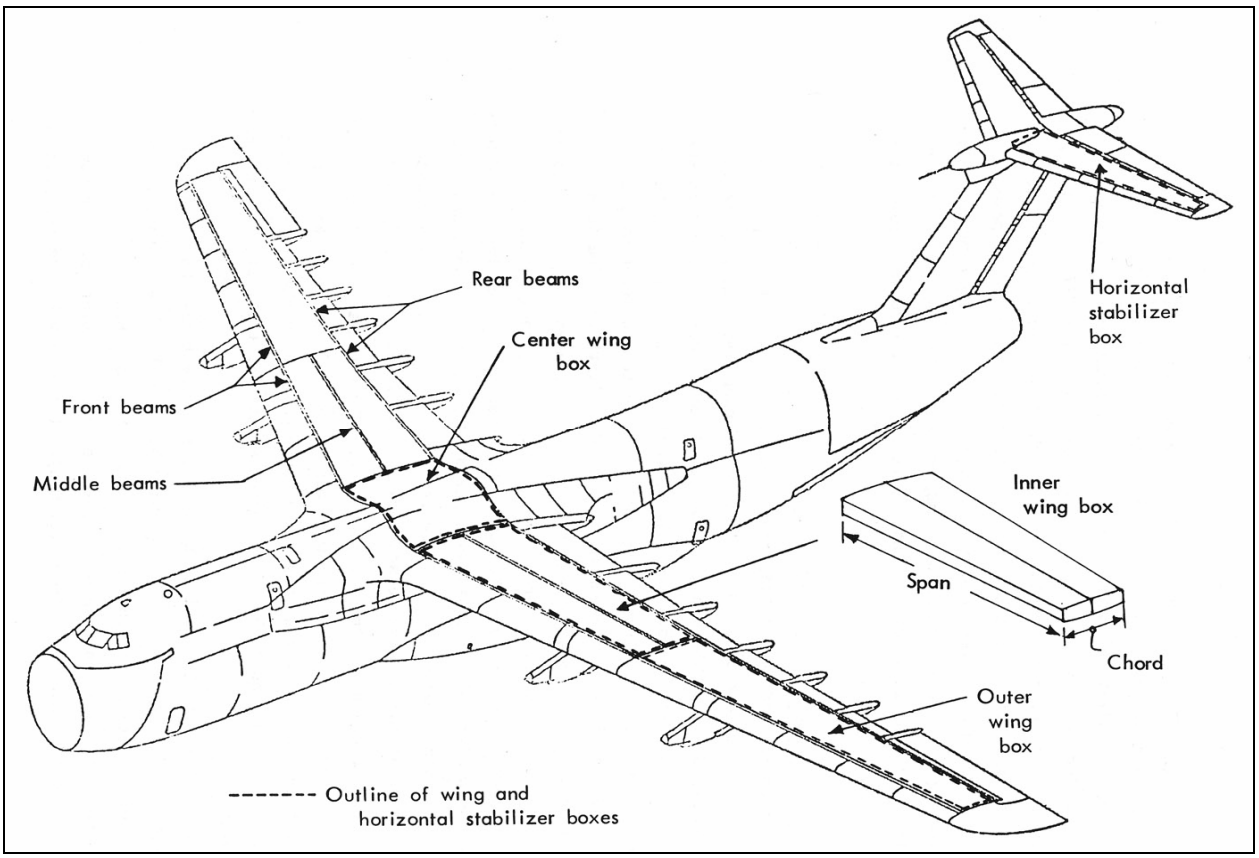

Figure 3-7. Static Test Article [12]

The systems engineering process also developed a suite of test articles required to prove compliance with the 30,000-hour service life requirement. These test articles are shown in Figure 3-8, and include the test article nomenclature used by the program [12]. The test fixture X993, noted as Expedited Wing, was built because the Scientific Advisory Board panel recommended it to the SPO in June 1971. The device was added to the program in an attempt to obtain early fatigue test life data.

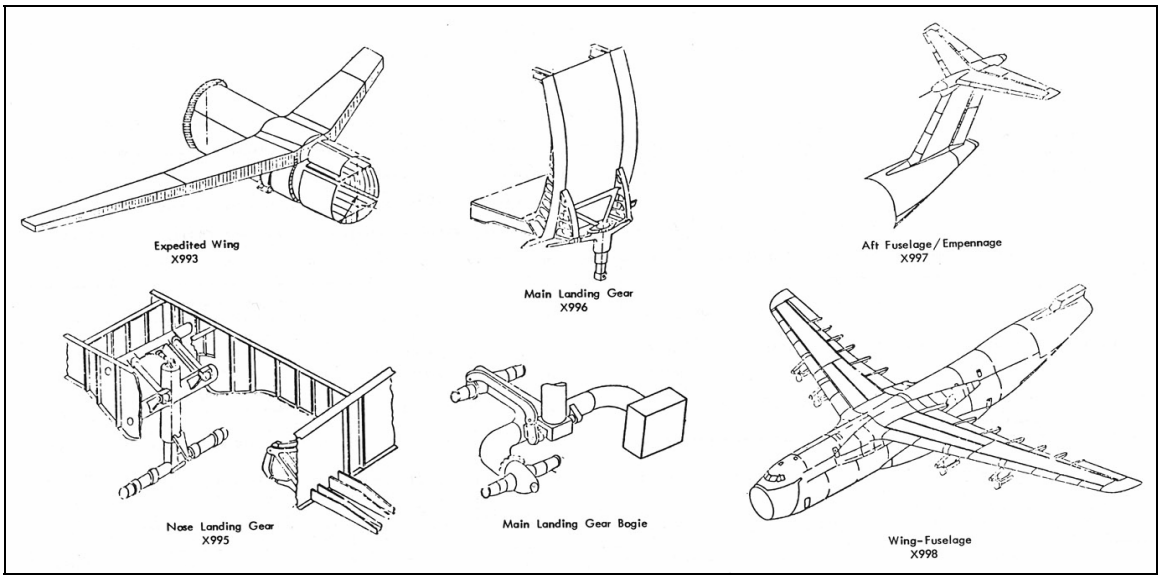

Figure 3-8. Fatigue Test Articles [12]

Both the government and the contractor were heavily involved in planning and testing these articles. The contractor was responsible for developing the test plans; the Air Force was responsible for approving the plans and the final report [5 (Smithers)]. The joint teams working on the test articles cooperated in developing the test conditions and assessing the final results. This cooperation worked well when the objectives were mutually inclusive. However, when the appearance of fatigue problems accelerated in 1969, the Air Force investigated the possibility of accelerating the test articles and inserting another test article in the test program, but Lockheed could not find a way to comply because of schedule conflicts. When the widespread cracking in the wing fatigue article was obvious, almost all the aircraft or the parts were complete. So, while the systems engineering process developed the rationale for the test articles, the results did not become available in time to influence production.[11]

Static and Fatigue Tests

Throughout the remainder of 1967 and into 1968, both Lockheed and the SPO engineering teams became increasingly concerned about the wing static strength and the fatigue life. By mid-1969, serious problems were apparent. The full-scale static test article, X999 (see Figure 3-8), failed structurally at 123 percent of the design ultimate load. The failure occurred at the wing fuselage junction at the center wing box carry-through structure to the fuselage. The fault was traced to the structural model, which showed a continuous load path through the spar caps. In fact, the caps carried little load and the load path became discontinuous [5, Smithers]. The parts were redesigned, but failed at 126%. Flight and operational aircraft were placed under flight limits to restrict high load factor maneuvers.

In 1969, flight test air vehicle No. 3 had already exhibited fatigue cracks in the rear beam cap of the wing. In October 1970, the full-scale fatigue article, X998, had developed initial cracking after a mere 9,000 hours of the required 120,000 hours of the 15 simulated Mission

[11] The contract was awarded in September 1965, the first flight occurred in June 1968, and the last of the 81 aircraft was delivered in May 1973, underscoring a high degree of concurrency.

Profiles required by the fatigue test plan. In December 1970, the second wing of fatigue test article X993 entered testing. By September 1971, the first fatigue test article had accumulated 15,000 hours and the second had accumulated 33,000 hours. Testing was terminated because both test articles had extensive general cracking. Figure 3-8 shows the configuration of the full-scale structural fatigue article for the wing and fuselage of the C-5 aircraft. The wing is composed of three major wing boxes: center, inner, and outer. All three wing boxes showed general cracking, almost all of it originating from holes fitted with the friction fit titanium fasteners.

In December 1971, a C-5 IRT [13] was formed to review the situation and develop alternatives.[12] The team assessed the C-5A structure to determine the necessary operational restrictions to ensure safety of flight. The payload and maneuvers were limited, including the elimination of terrain following, heavy payload during peacetime, aerial delivery of cargo, and operations out of austere unimproved runways. The team also assessed the structural fatigue life of the wing under several sets of Mission Profiles, and developed options A through K to bring the wing up to the full service life capability. These options, which formed the decision basis for the eventual redesign and production of a new wing for the operational fleet, are shown in Table 3-3.

Table 3-3. C-5 Independent Review Team Options A Through K [13]

	OPTIONS	PLAN A REFERENCE STRUCTURE	PLAN B LOAD ALLEVIATION	PLAN C LOAD ALLEVIATION CLIPPED TIP	PLAN D LOAD ALLEVIATION ALDCS	PLAN E LOAD ALLEVIATION FASTENEP CHG.	PLAN F LOAD ALLEVIATION CLIPPED TIP FASTENER CHG	PLAN G LOAD ALLEVIATION ALDCS FASTENER CHG	PLAN H DESIGN CHGS. REWORK BOXES	PLAN J DESIGN CHGS NEW BOX I.W. REWORK C. AND O.W.	PLAN K DESIGN CHGS. NEW BOX C. AND I.W. REWORK O.W.
1	LOAD ALLEV-IATION: FUEL MGT.	EXISTING LDCS	YES	YES	YES	YES	YES	YES	YES (1)	YES(1)	YES(1)
	MODIFIED LDCS		YES	YES	YES	YES	YES	YES	YES(1)	YES(1)	YES(1)
	ALDCS				YES			YES			
	CLIPPED TIP			YES			YES				
2	WING										
a	FASTENER CHANGE										
	CENTER WING								YES U.S.	YES U.S.	YES U.S.
	INNER WING					YES L.S.	YES L.S.&U.S.	YES L.S.&U.S.	YES U.S.	YES U.S.	YES U.S.
	OUTER WING								YES U.S.	YES U.S.	YES U.S.
b	LOCAL REINFORCEMENT										
	CENTER WING					YES U.S.	YES U.S.	YES U.S.	YES U.S.	YES U.S	YES U.S.(2)
	INNER WING					W.S. 120 JOINT	W.S. 120 JOINT	W.S. 120 JOINT	YES U.S.	YES U.S.(2)	YES U.S. (2)
	OUTER WING					YES L.S.			YES L.S.	YES L.S.	YES L.S.
c	DESIGN CHANGES										
	CENTER WING					YES L.S.	YES L.S.	YES L.S.	YES L.S.	YES L.S.	YES L.S.
	INNER WING								YES L.S.	YES L.S.	YES L.S.
	OUTER WING										
3	FUSELAGE										
a	DESIGN CHANGES		YES	YES	YES	YES	YES	YES	YES	YES	YES
4	LANDING GEAR										
a	DESIGN CHANGES		YES	YES	YES	YES	YES	YES	YES	YES	YES
b	CORROSION PROTECTION		YES	YES	YES	YES	YES	YES	YES	YES	YES
5	PYLON										
6	EMPENNAGE										
7	OPERATIONAL LIFE (HOURS)										
a	NEW AIRCRAFT	6,500	10,200	16,100	20,400	28,000	34,000	46,000	60,000	60,000	60,000
b	PROJECTED HIGH-TIME A/C	6,500	8,300	10,400	11,300	22,600	25,200	31,800	60,000	60,000	60,000
c	PROJECTED LOW-TIME A/C	6,500	10,200	14,700	16,700	28,000	32,200	41,300	60,000	60,000	60,000

L.S. = LWR. SURFACE U.S. = UPPER SURFACE (1) LOAD ALLEVIATION REQ'D ONLY UNTIL STRUCTURE MODS. ARE INCORPORATED AFTER WHICH THE EXISTING LDCS IS REINSTATED. (2) NEW PANELS, CURRENT DESIGN.

SUMMARY OF PLANS

The new wing design was incorporated on all 81 C-5As and all 50 C-5Bs. It had basically the same three-box design and construction as the original wing, but with added thickness to provide strength and lower stress. The flaps, ailerons, and secondary structure of the

[12] A complete description of all the fatigue problems for all of the structure can be found in [13].

wing were retained essentially unchanged. The outer wing box changes were limited to redrilling all the fastener holes and refitting the titanium fasteners. The center and inner wing box designs incorporated new frames, spars, skins, and caps. A net weight increase of 14,641 pounds for the center and inner wing boxes was necessary to achieve improved structural durability and meet the 30,000-hour service life requirement. The center wing box weight increased from 8,562 pounds to 13,807 pounds and the two inner boxes increased from a total of 29,293 pounds to 39,319 pounds [12].

While the wing exhibited the most notable fatigue problems, all of the structure was affected to some degree.[13] The ASD IRT's final report summarized the fatigue problems throughout the structure [13]. Figure 3-9 shows a pie chart of the structural weight and a pie chart showing the number of structural modification TCTOs (Time Compliance Technical Orders) required throughout the structure. Table 3-4 shows additional details. While the wing and pylon could not be repaired economically, the rest of the structure could be modified to meet the service life requirements of 30,000 hours without completely redesigning the parts. In tribute to the structures design team, the strategy of designing to the close tolerances and completing the tests with the idea of repairing the "hot spots" worked exceptionally well for most of the aircraft, but the wing and pylon demonstrated widespread cracking.

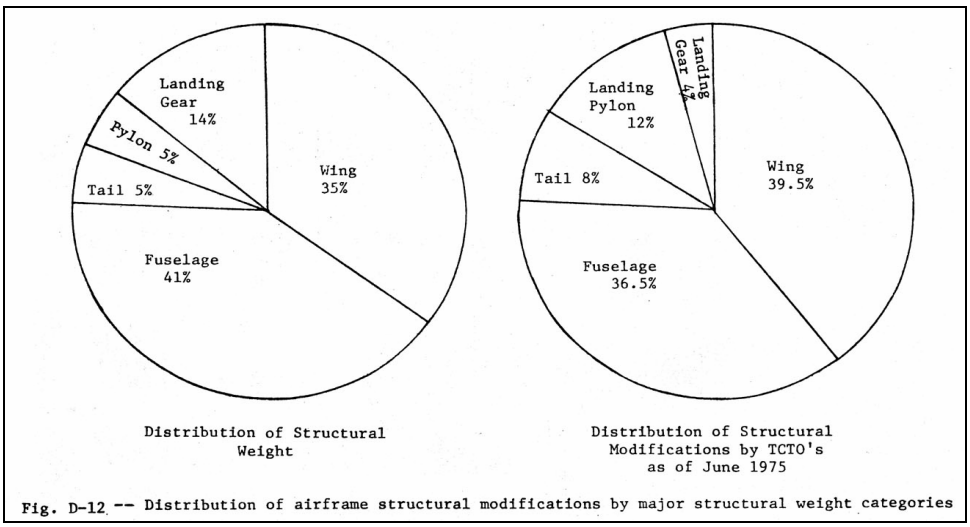

Figure 3-9. Pie Chart from IRT [14]

[13] The engine wing pylon was redesigned and replaced.

Table 3-4. TCTOs for Structural Modifications

Table D-10

CATEGORIZATION OF TIME COMPLIANCE TECHNICAL ORDERS (TCTO's) FOR AIRFRAME STRUCTURE MODIFICATIONS

(As of June 1975[a])

Location	Completed as of July 1974		To be Incorporated: As part of the First Structural Update		To be Incorporated: At next Programmed Depot Maintenance		Incorporation Status Not Apparent		Total Number of Airframe Structure TCTO's
	TCTO 1C-5A-	Originating ECP[b]	TCTO 1C-5A-	Originating ECP	TCTO 1C-5A-	Originating ECP	TCTO 1C-5A-	Originating ECP	
Wing	507 551	372 421	947 1296 1394 1393 1396 1604 1397 1635 1245 1247 1261 1299	999 6345 6468 6512 6536 6537 6540 6605 6205 6251 6261 6362	1363 1389 1525	6466 6505 6507	1295 1300 1328 1311	6303 6363 6401 6389	
Total (Subtotal)	(2)		(12)		(3)		(4)		21
Pylons	530 1333	415 6411	1636 1294	6583 6209	1356	6426	844	976	
Total (Subtotal)	(2)		(2)		(1)		(1)		6
Landing Gear	534 1312	434 6105							
Total (Subtotal)	(2)								2
Doors and Ramps	511 519 734	378 400 816	1099 1223 1255 1297	6115 6165 6250 6348	1671	6632			
Total (Subtotal)	(3)		(4)		(1)				8
Fuselage (except doors and ramps)	521 561 567	407 442 456	1237 1236 1289 1244 1211 1246 1291 1293 1301	6185 6188 6350 6189 6216 6220 6294 6299 6366					
Total (Subtotal)	(3)		(8)						11
Tail	615 610 1036	539 541 6013					1328	6401	
Total (Subtotal)	(3)						(1)		4
Totals (Subtotals) for all locations	15		26		5		6		52

[a]Source: C-5A Structural Configuration Report, Lockheed-Georgia Company, LG1US612/M-8-2, 30 June 1975, pp. 3.2-3.5.

[b]Engineering Change Proposal

SPO Program Management of IRTs

The SPO was quick to convene IRTs and use their advice. The first IRT review was chartered in March 1967 and was followed by IRTs in 1970, 1971, 1972, and 1975. The ASC IRT, chartered in December 1971, consisted of over 100 people from industry, academia, government organizations, and other contractors. It was assigned to work for a year in Marietta with the Lockheed team to resolve the fatigue life issue and plan a solution. The IRT developed the matrix of plans A through H that became the suite of alternatives debated for years before selection of a modified Plan K.

The management of IRTs was one of the responsibilities of the SPO. The use of IRTs was judged a good management tool because it gave the SPO staff access to experts at the nationally renowned level. The C-5A SPO leveraged the results from IRTs by involving the highest levels of decision makers in the Air Force. The systems engineering process set the objectives, agenda, and scope of the IRTs, along with the reporting officials for each team.

IRT Summary

The SPO used IRTs to augment their staff and managed their agenda and objectives. The decision that the SPO would manage the IRTs and their reporting process was vital. Once a problem became a programmatic issue, the external process called for an IRT. In the C-5 case the IRT worked for, and reported to, an outside entity and not the SPO director.

The SPO's use of IRTs was highly effective, as it led to the development of a set of operational limits for the initial maneuvering of the aircraft with the early wing design. These limits allowed worldwide deployment within a safe boundary that still enabled the aircraft to utilize most of its heavy cargo carrying capacity. The SPO and the Air Force also chartered an IRT to develop the strategy and requirements for a new wing design that would provide adequate static strength and service life. This effort led to the retrofit of a new wing to all 81 C-5As and the Air Force decision to augment the fleet with 50 more aircraft, designated as the C-5B.

4.0 SUMMARY

The four learning principles are repeated in italics and a short summary follows.

LP 1, Requirements. The process for developing and documenting the system performance requirements involved the User (warfighter), planners, developers, and technologists from both the government and industry in a coordinated set of trade studies. It resulted in a well-balanced, well-understood set of requirements that fundamentally remained unchanged throughout the program.

The requirements process used for the C-5 worked exceptionally well, as evidenced by the stability of the requirements following contract award. There were several changes to requirements during the development, such as the bank angle requirement in the first second during power approach. Other changes were also made in the area of structural design to reduce requirements and save weight. The requirement for the C-5B to operate from an unprepared landing field was removed 15 years after the original requirement was levied on the C-5A, and reflected a revision in doctrine based on usage of the aircraft in actual mission scenarios. Thus, while several requirements were changed during development, interviews with the participants all highlighted the ability to control changes during design and development. Requirements creep was well managed.

LP 2, Total Package Procurement Concept. The Total Package Procurement Concept (TPPC) employed by the government required a fixed-price, incentive fee contract for the design, development, and production of 58 aircraft. It included a clause giving Total Systems Performance Responsibility (TSPR) to the prime contractor. TPPC was invented to control costs, but it was the underlying cause of the cost overrun and limited the number of aircraft purchased under the original contract.

The TPPC was an attempt to control program costs by requiring a certain type of contract. However, because of the initial low price proposed by Lockheed and the inclusion of weight empty as a guaranteed value with an attendant cost penalty, the contract in essence became a cost-plus contract with a disincentive fee – clearly an unintended consequence.

The government eventually paid for most of the cost overrun and corrected the inadequate wing and pylon designs by allocating significant additional and unplanned funding to redesign the wing and pylon, retrofit the C-5A aircraft, and purchase additional C-5B aircraft with the new wing and pylon designs in order to field an adequately sized transport fleet.

Lockheed suffered severe financial consequences, culminating in a successful request to Congress for a guaranteed loan. The C-5 design team's experience was not transferred to their commercial effort on the L-1011[3]. The student should note that both decisions with significant unintended consequences (TPPC and guaranteed weight empty as a specification value with a cost penalty) were made prior to contract award.

LP 3, <u>Weight Empty Guarantee</u>. A Weight Empty Guarantee was included in the specification as a performance requirement and in the contract as a cost penalty for overweight conditions of delivered aircraft. The aircraft Weight Empty Guarantee dominated the traditional aircraft performance requirements (range, payload, etc.), increased costs, and resulted in a major shortfall in the wing and pylon fatigue life. The stipulation of a Weight Empty Guarantee as a performance requirement had far-reaching and significantly deleterious unintended consequences.

The Air Force included the weight empty guarantee in the systems specification as an attempt to control potential future growth of the aircraft weight empty during development. Stipulating a cost penalty if production airplanes exceeded the weight magnified the effect of including this design feature as a system performance requirement. Numerous unintended consequences resulted, the most notable being that the overall design suffered, the wing and pylon did not achieve the service life required, and the delivered aircraft still exceeded the guaranteed weight. Including a design feature as a co-equal to the fundamental performance requirements caused an imbalance in the systems engineering process by placing an inordinate level of emphasis on a single feature. Since one of the most important purposes of the systems engineering process is to balance performance, cost, and schedule, all were compromised when an imbalance was purposely inserted into the process.

LP 4, <u>Independent Review Teams.</u> The Air Force C-5 Systems Program Office employed Independent Review Teams (IRTs) to assemble national experts to examine the program and provide recommendations to the government. These problem-solving teams were convened to garner the best advice in particular technical areas: structure design and technology, and designs to achieve useful service life.

The Air Force SPO used IRTs to augment their staff, assess difficult problems, and recommend solutions to problems. The SPO had the power, ability, priority, and senior leadership support to quickly rally the best minds in the nation. The systems engineering process developed the agenda, established the teams' charter, collected data for review, assisted in developing the trade study information, and aided in constructing alternative solutions. The IRTs presented the matrix of solutions to the SPO for final selection and approval.

5.0 REFERENCES

1. Luanius, R., Dvorscak, B.J., *"The C-5 Galaxy History, Crushing Setbacks, Decisive Achievements,"* Turner Publishing, 2001.

2. Friedman, G. and Sage, Andrew P. *Case Studies of Systems Engineering and Management in Systems Engineering,* 22 September 2003. University of Southern California, CA and George Mason University, VA.

3. Joe Lusczek Notes.

4. Brown, S.L., *A Genesis Workshop – Five Generations of Engineering Enterprise from the Birthplace of Aviation,* History Office, Aeronautical Systems Center, Wright-Patterson AFB, OH, 2003.

5. Griffin, J.M., Personal Interviews, Jun 2003–Apr 2004, (Robert B. Ormsby, B.J. Dvorscak, Eddie Gustafson, O. Lester Smithers, Timothy P. Sweeney, Jerome Poncar, David Dickenson, Michael Colson, William Swisher, Chan Posson, Howard Wood, Abe Goldfarb, Harold Howard, Joe Lusczek, Jean Gebman, Bill Arndt, Brad Allison, Phil Settlemeyer, Chuck Tiffany, William Mar).

6. Poncar, J.V., Maj. USAF, Johnston, II, J.R., Capt USAF, *"History and Analysis of the C-5A Program: An Application of the Total Package Procurement Concept,"* Thesis, Air Force Institute of Technology, Oct. 1970.

7. Air Force System Command Manuals, *Systems Engineering and Program Management,* 375, volumes 1 through 5, 1962-1970.

8. Knaack, M.S., *Military Airlift and Aircraft Procurement, the Case of the C-5A*, Air Force History Office, 1999.

9. Chadwick, C.A., *The Design and Development of the C-5A*, AIAA Case Study series, Dec 1970.

10. Aeronautical Systems Center Financial Management Costs models and supporting data, ASC/FM, Wright-Patterson Air Force Base, OH, (Circa 1970-1990).

11. *C-5 Post Design Weight Analysis*, Vol. II, 6.2.4.5, Lockheed Weights Report, May 1970.

12. Hoehn, Jr., W.E., Perry, R.L., Gebman, J.R., et al., *"Strategic Mobility Alternatives for the 1980s*," Vols. 1, 2, and 3, Report R-1941/2-AF, Mar 1977, Rand Corporation, Santa Monica, CA.

13. Goldsworthy, R. E. and Lincoln, John, *Independent Review Team Summary Report*, March 1973.

14. Aeronautical Systems Center Division Advisory Group, Final Report, *C-5A Structural Analysis*, 1976.

15. Defense Systems Management College, *System Engineering Manuals*, 2003.

6.0 LIST OF APPENDICES

Appendix 1 - Completed Friedman Sage Matrix for C-5A

Appendix 2 - Author Biographies

Appendix 3 - Interviews

Appendix 4 - C-5 System Concept Design Trade Studies

Appendix 5 - C-5 Operational Experience and Projected Upgrades

Appendix 1

Completed Friedman Sage Matrix for C-5A

Table A1-1. The Friedman Sage Matrix for the C-5A

	Contractor	Shared	Government
A. Requirements Def. and Management	Competing contractors were funded prior to source selection to assess the risk and performance for User/Army needs on conceptual configurations.	Industry assisted government in technology readiness assessment	Government conducted extensive operational mission analysis during concept exploration. Government, User, contractors worked together, under Development Planning leadership.
B. Systems Architecture Development	Competing contractors allocated systems functional architecture to the lowest level of the design team, to determine design and technology risk.	The contractor and government jointly assessed approaches to comply with the user's queries / needs	Government developed top level architecture and coordinated with the competing contractors for risk/performance assessments. All requirements were documented in the System Specifications.
C. System, Subsystem Design	Lockheed allocated functional requirements via Requirements Allocation Sheets. Trade studies, TPM, budget tracking to estimates, and scheduling reviewed weekly with direct reports and chief engineer.	Government and competing contractors shared data, but after award of contract to Lockheed, communications were more formal. Government measures were in the specifications and penalty clauses were added for some areas, but not all.	Government tracked Lockheed progress with systems engineering analysis tools and engineering discipline tools to predict weight, performance and service life.
D. Validation and Validation	Systems engineering process allocated functional test requirements and determined test fixtures, aircraft test assemblies, and laboratories. Lockheed conducted ground and developmental flight tests.	Lockheed prepared test plans. SPO approved test plans and approved final results to certify completeness. AF and Lockheed conducted joint flight tests. Government convened Independent Review Teams (IRTs) to assemble the Nation's experts in structures to examine the wing and recommend solutions.	Government conducted operational flight tests. The SPO determined operational limits for maneuvers and loads.
E. Risk Management	Risk management conducted at base engineering/manufacturing level by experienced team. Not a formal document but formal review process during development.	Government and competing contractors assessed technology risk and developed systems requirements within the state of the art. During development, separate risk assessment processes.	Government led development of top level requirements to constrain risk to available capabilities. During development, conducted Air Force risk assessment and chartered their own IRT's.
F. Systems Integration & Interfaces	Lockheed allocated and managed interfaces through specifications and ICD's. Managed subcontractors, except General Electric.	SPO managed GFP and support equipment. Numerous requests for ECP's because of Lockheed requirements for government actions. Process was managed effectively.	SPO responsible for interfaces with AF system. First system to use 463L pallets and logistics system.
G. Life Cycle Support	Life Cost Costs trades were the leading mentric in the early configuration studies. Cost trades became secondary to achieving weight during development.	Government and contractors emphasis was on reliability, supportability. First use of AFSCM 375 series which required early and continuous emphasis.	Government developed AFSCM 375 manuals. Included reliability requirements and enforced design measures to achieve them.
H. Deployment and Post Deploy	Development support for post deployment continued because of structural/payload limits and Independent Review Teams.	Contracts were let to Lockheed for support and for the wing redesign.	Deployment and post deployment phase well executed, as evidenced by success of system in Vietnam and Israel.
I. System and Program Management	Well managed systems engineering process systemic to the staff, including program manager, manufacturing and logistics. Tracked key TPM at all levels and directly managed budget and schedule.	Systems engineering was inherent in work content, not a separate budget entity. Systems engineering was fundamental to the basic design process. IRT membership developed by both Lockeheed and AF SPO.	SPO role active in establishing requirements up to the contract award, then oversight of the development up until the establishment of 1971 ASD Independent Review Team. SPO responsible to initiate and manage IRTs.

Appendix 2

Author Biographies

JOHN M. GRIFFIN

John Griffin is President, Griffin Consulting, providing systems engineering and program management services to large and mid sized aerospace firms. He provides corporate strategy planning initiatives for company CEOs, reviews ongoing programs to assess progress and recommend corrective actions, and participates as an integral member of problem solving teams. He is active in numerous leading-edge technologies and advanced system development programs.

Experience:

- Director of Engineering, Kelly Space and Technology, Inc, San Bernardino, CA. Responsible for the conceptual design process for the development of a space launch platform.
- Director, Development Planning, Aeronautical Systems Center, Wright-Patterson Air Force Base, OH. Responsible for long-range planning for aeronautical systems.
- Chief Systems Engineer, Engineering Directorate. Provided engineering leadership and management for all Air Force aeronautical weapon systems.
- Director of Engineering, B-2 Spirit Stealth Bomber, B-2 System Program Office. Provided engineering leadership and management from the program inception through first flight.
- Source Selection Authority for two source selections
- Chief engineer, F-15 Eagle Fighter
- Chief Airframe Engineer, F-16 Fighting Falcon
- Chief Airframe Engineer, Air Launched Cruise Missile

Honors:

- Awarded two Meritorious Service Medals
- Awarded the Distinguished Career Service Medal for his 37 years of achievement upon retirement in 1997
- Pioneer of Stealth, 1998
- University of Detroit Mercy; Engineering Alumnus of the Year, 2002

Education:

- University of Detroit, Detroit MI, 1964: Bachelor of Aero Engr.
- Air Force Institute of Technology, WPAFB OH, 1968: MS of EE
- Massachusetts Institute of Technology, Cambridge MA, 1986: Senior Executive Sloan Program.

Affiliations:

- Founder (1993) and President (1993–1997), Western Ohio Chapter Senior Executive Association.
- Co-founder (1995) and President (1996–1997), Defense Planning and Analysis Society.

ERIC BUCHER

Experience:

Mechanical Engineer, Durability and Damage Tolerance
United States Air Force, Wright-Patterson AFB, OH

- Aircraft Structures Branch, Student Engineer
  F/A-22 System Program Office, Aeronautical Systems Center
  - Coordinated solutions with contractors to resolve aircraft structural production variances
  - Constructed and briefed technical presentations of various work projects to upper management on a weekly basis
  - Managed, documented, and briefed structural Deficiency Reviews and Material Improvement Processes
  - Compiled and organized extensive test results from various static testing
- Flight Mechanics & Structures Branches, Student Engineer
  Engineering Directorate, Aeronautical Systems Center
  - Constructed & processed CFD models for various aircraft systems
  - Collected & analyzed flight performance data for various re-engine programs
  - Learned basic aircraft weight and balance, durability and damage tolerance, and aircraft structures principles

Education:

- Ohio University, Athens, OH
  BS, Mechanical Engineering – Russ College of Engineering

Appendix 3
Interviews

Brad Allison, Lockheed

Bill Arndt, Lockheed

Michael Coalson, Air Force System Program Office

David Dickenson, Lockheed Program Office

B.J. Dvorscak, Lockheed Program Office

Jean Gebman, Rand

Abe Goldfarb, Air Force System Program Office

Eddie Gustafson, Lockheed Program Office

Harold Howard, Air Force System Program Office

Joe Lusczek, Development Planning

William Mar, Air Force Engineering

Robert B. Ormsby, Lockheed Program Office

Jerome Poncar, Air Force Thesis Student, in Air Force SPO

Chan Posson, Air Force System Program Office

Phil Settlemeyer, Lockheed

O. Lester Smithers, Air Force System Program Office

Timothy P. Sweeney, Air Force System Program Office

William Swisher, Air Force System Program Office

Chuck Tiffany, Air Force Engineering

Howard Wood, Air Force System Program Office, and IRT

Appendix 4

Titanium Trade Study

A very important trade study that occurred early in the program addressed the amount of overall weight savings available to the designers if a significant amount of titanium were used. Figure A4-1 shows the findings graphically [9].

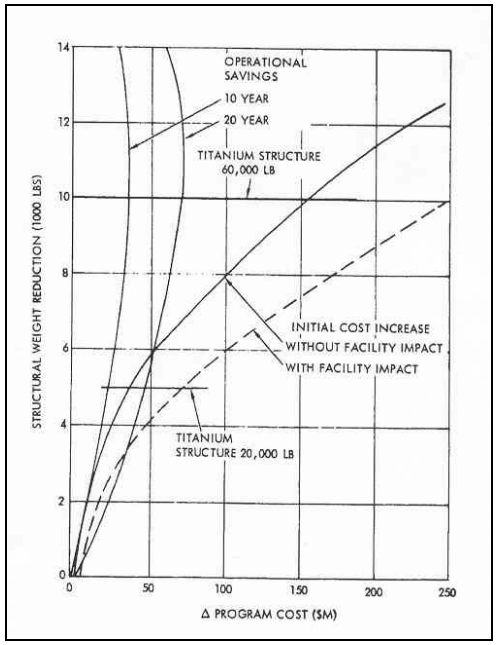

Figure A4-1. Titanium Trade Study

Unfortunately, the trade study did not accurately assess the risk of producing parts fabricated from titanium. Because the findings were based on an ambitious assessment of the state of the art of the ability to design, and especially manufacture, titanium parts and subassemblies, this benefit was never realized. In fact, they became an additional contributor to the weight growth that plagued the program during its initial development.

The systems engineering process must validate the trade basis to eliminate downstream risk arising as a consequence of a trade study based on invalid technical basis. In this case, the original proposal design incorporated 26,000 pounds of Ti, which grew to 65,000 pounds by August 1965. After consulting with Clarence "Kelly" Johnson, Chief engineer of the Lockheed Skunk Works in Burbank, CA, and assessing that division's experience with fabrication Ti for the SR-71, the Lockheed Marietta team reduced the Ti weight to 35,000 pounds by November 1965 and again over the ensuing months, to a low of 6,325 pounds by April 1966. When the design was finished, it incorporated 7,825 pounds of titanium [9].

The systems engineering process can allow for greater potential growth when factors such as uncertainty regarding the state of the art threaten the results of a study or analysis. In this case, Lockheed did not learn until too late to incorporate technology maturation design and manufacturing assessments and tests because of the schedule requirements on the program. The systems engineering process could be judged at fault for not seeking Lockheed Burbank's opinion sooner.

Appendix 5

C-5 System Concept Design Trade Studies

Life-cycle cost was one of the central trade metrics in the early configuration assessments. Ten-year operating cost and ten-year system costs were the underpinning for many of the decisions that sized the aircraft, as shown in the body of this case study. The development phase's emphasis on reliability and supportability was included in the contract through the system specification. Additionally, the management process stipulated in AFSCM 375 required management techniques specifically aimed at trading life-cycle cost as a key figure of merit. After the contract was signed, Lockheed became less influenced by life cycle cost as a selection metric because of the punitive contract cost penalty on excessive weight and late delivery.

Several configuration alternatives were reinvestigated in some detail for the CX- HLS, one of which was the lambda wing, shown in Figure A5-1. The lambda wing offered excellent potential for high speed cruise Mach numbers, up to M=0.9. But the requirements were narrowing to M=0.767, so the configuration was not pursued further because it was judged 5% more expensive [9].

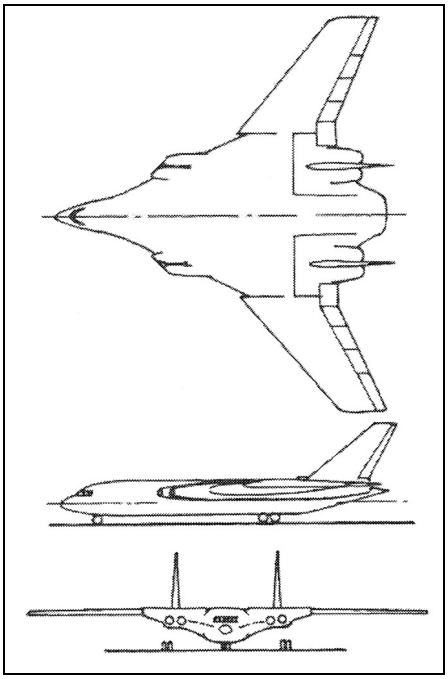

Figure A5-1. The High-Speed Lambda Wing Design Concept [9]

There was also a study of a straight wing design and a modified straight wing, called the bat wing. The results of the assessment are shown in Table A5-1. The 2% improvement in 10-year system costs was not sufficient to sway the decision from the baseline.

Table A5-1. Cost Comparison of the Straight Wing Configurations [9]

	25 deg Sweep	0 deg Sweep	Bat Wing
Procurement	1.00	1.00	0.94
10 Year Opening	1.00	1.02	1.02
10 Year System	1.00	1.01	0.98

Note the use of life cycle and system costs as the selection metric.

During the configuration studies conducted in 1961–1963, the Lockheed team built a simple yet very effective engineering mock-up at Ft. Benning, GA, to assess the utility of potential cargo bay configurations [5 (Ormsby)]. The mock-up was constructed of plywood and other common building materials and was used in conjunction with the operational military cargo handlers and the company design engineers to determine the optimal configuration for the using command. Numerous inventory Army vehicles were made available to the company and the team assessed multiple ways of loading and unloading the cargo. The company engineers and the MATS operators assessed cargo bay lengths, widths, and heights to develop the most useful internal layout. This simple systems engineering tool was one of the most effective hands-on analyses/demonstrations of the early program and emphasizes how important seemingly simple learning tools can be. The trade study sized the fuselage and finalized the floor configuration along with the knight's visor nose to enhance the drive-through cargo timeline.

Figure A5-2 [9] shows the number of sorties required for equipment and personnel for an Army division. The study summarizes the results of the 17.5-foot-wide cargo bay (the eventual cargo bay width was 19.0 feet wide) and shows some of the typical data derived by the systems engineering process during the concept exploration phase of the program.

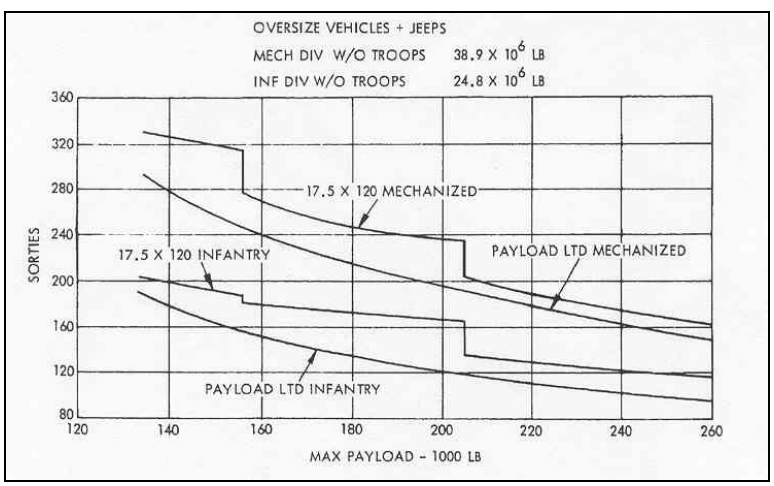

Figure A5-2. Sorties vs. Maximum Payload [9]

Figure A5-3 shows the number of sorties necessary to carry the equipment for a typical division if the cargo aircraft had a cargo bay 17.5 feet by 120 feet (the final length was 121 feet). The payload ltd (limited) mechanized case loads the aircraft to the maximum for each sortie, while the higher, discontinuous line shows the actual case where the sorties are limited by floor space. The higher line shows the case more representative of real-world usage. The systems

engineering process is responsible for ensuring that trade study analyses use representative situations.

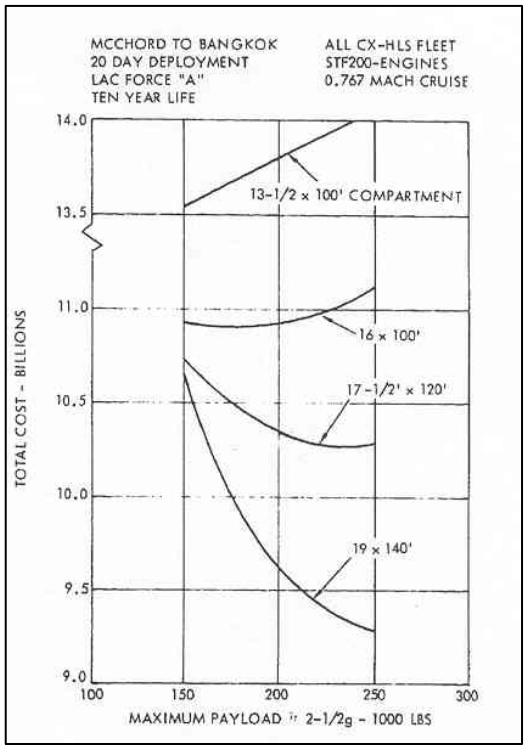

Figure A5-3. Trade Study for Cargo Bay Size and 10-Year Life Cycle Costs [9]

A concurrent trade study assessed the impact of the configuration of the payload bay and the maximum payload on the total life cycle costs, shown in Figure A5-4. This study showed a marked advantage to the large floor space. For the large floor space, the 17.5 x 120 ft and 19.5 ft x 140 ft, showed marked advantages. The larger floor space and wider cargo bay were eventually selected, based on this and other supporting analysis. The C-5As and C-5Bs have a cargo compartment 19.0 ft x 13.5 ft x 121 ft.

The trade study for the heavy mission payload shows a benefit in terms of relative costs for a payload capability over 205,000 pounds, so the aircraft was developed with the larger capability of 220,000 pounds as the specification requirement, as shown in Figure A5-4.

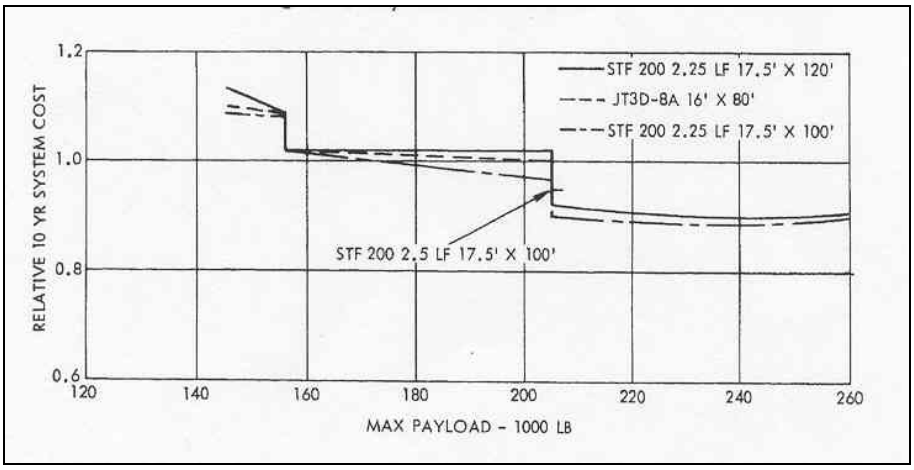

Figure A5-4. System Costs vs. Maximum Payload [9]

A trade study to size the wing balanced maximum takeoff gross weight against wing loading. This is a standard aircraft design analysis, but for the C-5A the takeoff requirements intersected the normal trade lines and showed a balance point for the proposal design. This is depicted in Figure A5-5. This study sized the wing and later influenced the flap design. The alphanumeric designations are for different engine variants that existed prior to the Air Force's selection of General Electric as the C-5A engine contractor.

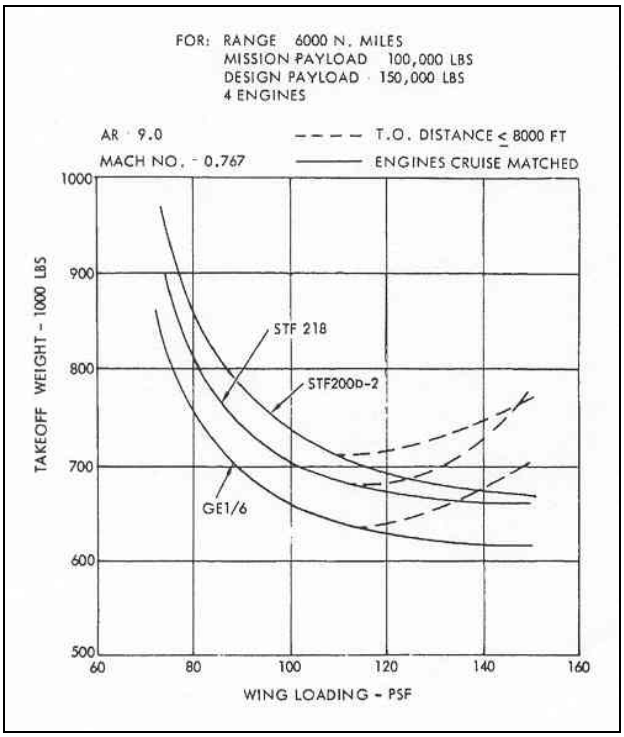

Figure A5-5. Wing Loading Trade Study Results [9]

Lockheed's original proposal, submitted to the Air Force in April 1965, was based on over three years of trade studies conducted by an experienced staff. These studies developed a balanced vehicle that Lockheed claimed could meet or exceed all RFP requirements.

Appendix 6

C-5 Operational Experience and Projected Upgrades

A6.1 Operational Experience

The C-5 has been an operational success by any figure of merit. The Air Force inventory currently consists of 126 C-5 aircraft (74 C-5A, 50 C-5B, and 2 C-5C). The C-5 fleet continues to play a key role in the nation's strategic airlift capability. During Operation Desert Storm, the C-5 fleet carried 46 percent of the total inter-theater cargo, yet flew only 29 percent of the cargo missions. In Operation Iraqi Freedom, the C-5 fleet carried 48 percent of the total cargo, yet flew only 23 percent of the total cargo missions. Table A6-1 compares several scenarios of the fleet operations to support distant theaters of conflict. The performance of the C-5 fleet has always been noteworthy.

Table A6-1. C-5 Cargo Fleet Operations Compared to All Cargo Operations

Airlift Data By Aircraft Type

Operation Iraqi Freedom Deploy

AIRCRAFT	MISSIONS	SORTIES	PAX	AVG PAX/MSN	TONS	AVG TONS/MSN
C-5	931	5142	25151	27	50087.9	53.8
C-17	1165	6258	19853	17	38538.5	33.1
C-130	119	533	787	7	659.7	5.5
C-141	282	1540	3794	13	4180.6	14.8
COMM	1316	4542	224047	170	10836.9	8.2
KC-10	89	408	930	10	1819.1	20.4
KC-135	181	314	1376	8	451.3	2.5
OTHER	8	34	14	2	460.7	57.6
TOTALS	**4091**	**18771**	**275952**	**67**	**107034.7**	**26.2**

Operation Iraqi Freedom Re-Deploy

AIRCRAFT	MISSIONS	SORTIES	PAX	AVG PAX/MSN	TONS	AVG TONS/MSN
C-5	144	719	3107	22	6755.4	46.9
C-17	220	1147	4214	19	7028.4	31.9
C-130	41	219	101	2	91.7	2.2
C-141	24	122	444	19	296.8	12.4
COMM	94	318	14926	159	237.5	2.5
KC-10	15	29	194	13	99	6.6
KC-135	116	228	937	8	231.7	2.0
TOTALS	**654**	**2782**	**23923**	**37**	**14740.5**	**22.5**

PAX = Passengers COMM = Commercial
MSN = Mission

Source: Air Mobility Command

A6.2 Current C-5A and C-5B Modernization Programs

The C-5As and C-5Bs are undergoing two modernization programs, an avionics upgrade titled Avionics Modernization Program (AMP) and a program to improve reliability and incorporate modern commercial turbofan engines, titled Reliability Enhancement and Re-Engine Program (RERP).

A6.2.1 Avionics Modernization Program

The AMP will replace the engine instruments, flight instruments, and flight system components that have become unsupportable. The program will install Global Air Traffic Management (GATM), Terrain Awareness of Warning System (TAWS), and Traffic Alert and Collision Avoidance System (TCAS). The contract was awarded to Lockheed Martin in January 1999 and the two modified aircraft are currently undergoing flight tests. Certification is projected for October 2004. The difference between the two cockpits is shown in Figure A6-1.

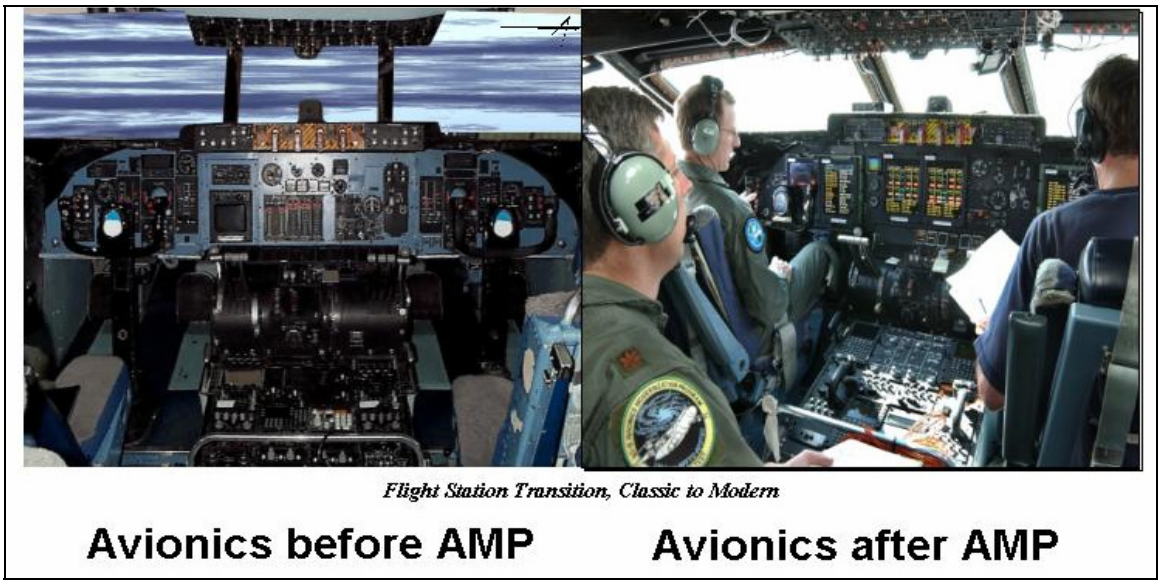

Figure A6-1. Cockpits from the Original Program Compared to AMP

A6.2.2 Reliability Enhancement and Re-Engine Program

RERP improves reliability, maintainability, and availability; increases the Mission Capable rate to 75 percent; and is projected to reduce total ownership cost by $8.1 billion. The program will replace the power plants and identified unreliable/unsupportable systems, and improve payload capability/throughput and time-to-climb/one engine out climb gradient. The program has selected the General Electric CF6-80C2L1F engine and has chosen Goodrich to design and produce the pylons. An artist's rendition of the aircraft after completion of the program is shown in Figure A6-2. The current Air Force acquisition strategy stipulates the modification of the B models first. The C-5Bs are 16 years younger than the A models, with the average age of a C-5B being 15 years compared to the C-5As' average age of 31 years. The Systems Development and Demonstration (SDD) contract was awarded to Lockheed Martin in

December 2001. The program conducted Critical Design Review (CDR) in the second quarter of fiscal year 2004.

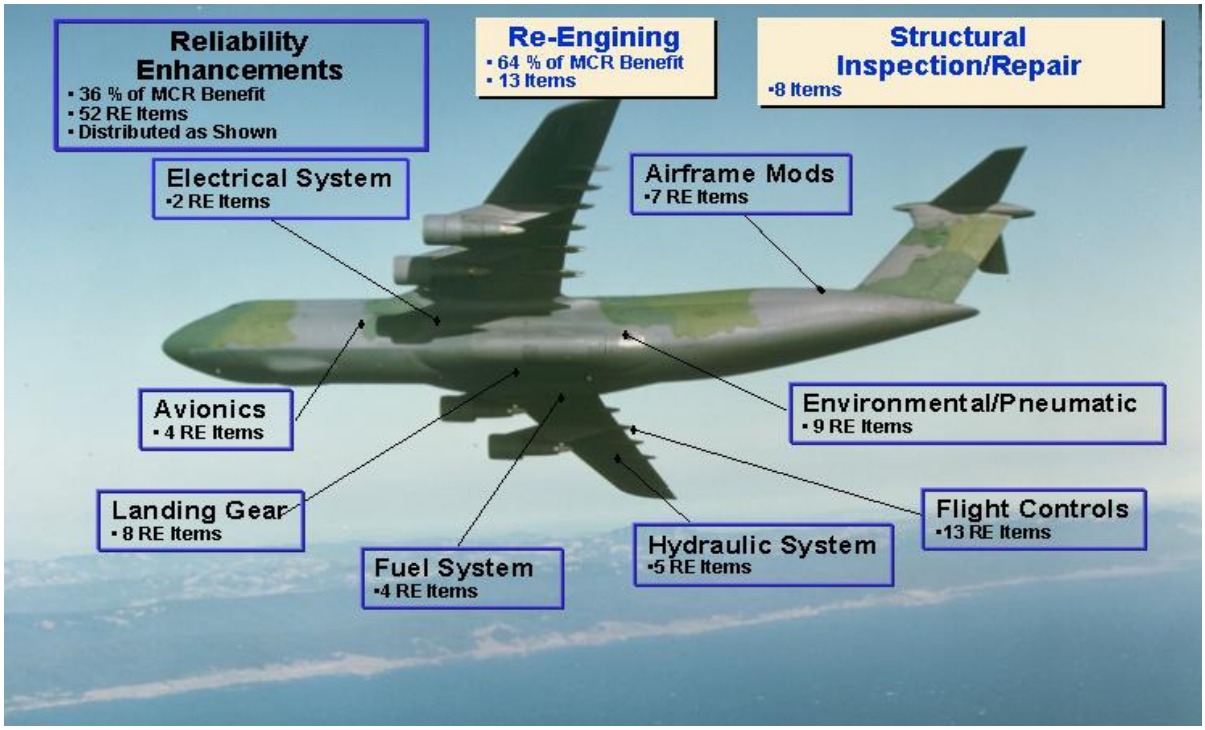

Figure A6-2. Artist's Rendition of the C-5 with the New Engines