DoD 6055.09-STD

DOD AMMUNITION AND EXPLOSIVES SAFETY STANDARDS

February 29, 2008

OFFICE OF THE DEPUTY UNDER SECRETARY OF DEFENSE (INSTALLATIONS AND ENVIRONMENT)

THE UNDER SECRETARY OF DEFENSE
3010 DEFENSE PENTAGON
WASHINGTON, DC 20301-3010

ACQUISITION, TECHNOLOGY AND LOGISTICS

February 29, 2008

FOREWORD

This Standard is issued under the authority of DoD Directive 6055.9E, "Explosives Safety Management and the DoD Explosives Safety Board," August 19, 2005 (Reference (a)), and cancels DoD 6055.9-STD, "DoD Ammunition and Explosives Safety Standards," October 5, 2004. It establishes uniform safety standards applicable to ammunition and explosives throughout their life-cycle, to protect associated personnel and property, unrelated personnel and property, and the environment from the potential damaging effects of an accident involving ammunition and explosives.

This Standard applies to the Office of the Secretary of Defense, the Military Departments, the Office of the Chairman of the Joint Chiefs of Staff, the Combatant Commands, the Office of the Inspector General of the Department of Defense, the Defense Agencies, the DoD Field Activities, and all other organizational entities in the Department of Defense (hereafter referred to collectively as the "DoD Components").

This Standard is effective immediately and is mandatory for use by all DoD Components. The Heads of the DoD Components may issue supplementary guidance only when necessary to provide for unique requirements within their respective Components. A copy of such supplementary guidance shall be forwarded to the Chairman, Department of Defense Explosives Safety Board (DDESB).

Forward recommendations for change to this Standard through channels to:

Chairman
Department of Defense Explosives Safety Board
Room 856C, Hoffman Building I
2461 Eisenhower Avenue
Alexandria, VA 22331-0600
Phone: 703-325-0891; Fax: 703-325-6227

RELEASABILITY. UNLIMITED. This Manual is approved for public release and is available only in electronic form. The DoD Components (to include the Combatant Commands), other Federal Agencies, and the public may obtain copies of this Standard through the Internet from the DoD Directives Program Web Site at http://www.dtic.mil/whs/directives.

Symbols DD-AT&L (AR) 1643 and DD-AT&L (AR) 1020 have been assigned to the reports required by this Standard according to DoD 8910.1-M (Reference (b)).

John J. Young, Jr.
Under Secretary of Defense
for Acquisition, Technology and Logistics

TABLE OF CONTENTS

	Page
FOREWORD	2
TABLE OF CONTENTS	3
REFERENCES	9
ACRONYMS AND ABBREVIATIONS	13
CHAPTER 1 – INTRODUCTION	19
C1.1. General	19
C1.2. Explosives Safety Management (ESM) Policy	19
C1.3. Applicability	19
C1.4. Termination of Use of Facilities Storing AE	20
C1.5. Waivers, Exemptions and Secretarial Exemptions or Certifications	21
CHAPTER 2 – REACTION EFFECTS	23
C2.1. Introduction	23
C2.2. HD 1.1 Effects	23
C2.3. HD 1.2 Effects	33
C2.4. HD 1.3 Effects	34
C2.5. HD 1.4 Effects	36
C2.6. HD 1.5 Effects	36
C2.7. HD 1.6 Effects	36
CHAPTER 3 – HAZARD CLASSIFICATION, STORAGE AND COMPATIBILITY PRINCIPLES, AND MIXING RULES	37
C3.1. Hazard Classification	37
C3.2. DoD Hazard Classification System	37
C3.3. Storage and Compatibility Principles	40
C3.4. Mixed Compatibility Group Storage	42
CHAPTER 4 – PERSONNEL PROTECTION	43
C4.1. Scope and Application	43
C4.2. Risk Assessment	43
C4.3. Permissible Exposures	43
C4.4. Protective Measures	44

CHAPTER 5 – CONSTRUCTION CRITERIA PERMITTING REDUCED SEPARATION DISTANCES 46

C5.1. General 46
C5.2. AE Storage Facilities 46
C5.3. Barricades 60
C5.4. Site and General Construction Plans Review 65
C5.5. Site Plans Not Required 68

CHAPTER 6 – ELECTRICAL STANDARDS 70

C6.1. General 70
C6.2. Hazardous Locations 70
C6.3. Special Occupancies 70
C6.4. Static Electricity 71
C6.5. Electric Supply Systems 71
C6.6. Hazards of Electromagnetic Radiation to Ordnance (HERO) 72

CHAPTER 7 – LIGHTNING PROTECTION 73

C7.1. Policy 73
C7.2. LPS Design 73
C7.3. Inspection, Testing, and Training 74
C7.4. Lightning Protection Exceptions 75

CHAPTER 8 – HAZARD IDENTIFICATION FOR FIREFIGHTING AND EMERGENCY PLANNING 76

C8.1. Scope and Applicability 76
C8.2. Fire Divisions 76
C8.3. Fire Division Symbols 77
C8.4. Chemical Agent and Chemical Munition Hazard Symbols 77
C8.5. Firefighting Measures 82
C8.6. Emergency Planning 86

CHAPTER 9 – QUANTITY-DISTANCE AND SITING 87

C9.1. General 87
C9.2. Determining the Quantity of Explosives 87
C9.3. QD Principles 89
C9.4. QD Criteria for Accidental Detonations 90
C9.5. Energetic Liquids 146
C9.6. Siting 163
C9.7. Underground Storage of AE 180
C9.8. Facilities Siting Criteria 193

CHAPTER 10 – CONTINGENCIES, COMBAT OPERATIONS, MILITARY OPERATIONS OTHER THAN WAR (MOOTW), AND ASSOCIATED TRAINING 212

C10.1. General 212
C10.2. Risk Management 213
C10.3. Site Plan Process 213
C10.4. QD Criteria For Contingencies, Combat Operations, MOOTW and Associated Training 216

CHAPTER 11 – TOXIC CHEMICAL MUNITIONS AND AGENTS 228

C11.1. Scope and Applicability 228
C11.2. Siting Criteria 229
C11.3. Workplace Airborne Exposure Limits (AEL) 229
C11.4. Toxic Chemical Agent Hazard Analyses, Measurements and Exposure Controls 230
C11.5. Medical Surveillance 233
C11.6. Worker PPE 233
C11.7. Administrative and Work Practice Controls 233
C11.8. Engineering Design Guidance for Facilities 239

CHAPTER 12 – REAL PROPERTY KNOWN OR SUSPECTED TO CONTAIN MUNITIONS AND EXPLOSIVES OF CONCERN AND CHEMICAL AGENTS 241

C12.1. Scope 241
C12.2. Explosives Safety Standards for the Identification and Control of Areas Known or Suspected to Contain MEC or CA 242
C12.3. Explosives and CA Safety Aspects of Response Actions 244
C12.4. Special Considerations 247
C12.5. Required Safety Submissions (ESS, CSS and Explosives or CWM Site Plans) 253
C12.6. Amendments and Corrections 264
C12.7. AAR 266
C12.8. Transfer of Real Property Outside of DoD Control 266

CHAPTER 13 – ACCIDENT NOTIFICATION AND REPORTING REQUIREMENTS 269

C13.1. Scope 269
C13.2. Security Classification 269
C13.3. Accident Notification Requirements 269
C13.4. Accident Reports 270
C13.5. Chemical Agent Accidents 272

CHAPTER 14 – SPECIAL STORAGE PROCEDURES FOR WASTE MILITARY MUNITIONS 274

C14.1. Scope and Applicability 274
C14.2. Waivers and Exemptions 274
C14.3. Requirements for Storage of Waste Military Munitions Under CE 274
C14.4. Other Storage Standards 276
C14.5. Un-Permitted and Uncontrolled Loss Reporting 276
C14.6. Closure of Facilities Storing Waste Military Munitions Under CE 277
C14.7. Closure of Facilities Storing Waste Military Munitions Under RCRA 278

CHAPTER 15 – UNEXPLODED ORDNANCE (UXO) 279

C15.1. Scope 279
C15.2. General 279
C15.3. Disposition of UXO and of Other Military Munitions Being Managed as UXO 281
C15.4. Special Considerations 283
C15.5. Access to Areas Known or Suspected to Contain UXO 285
C15.6. Identification and Control 287
C15.7. MSD for UXO 288
C15.8. Other Considerations 288

CHAPTER 16 – MATERIAL POTENTIALLY PRESENTING AN EXPLOSIVE HAZARD (MPPEH) 291

C16.1. Scope 291
C16.2. Functions 291

APPENDICES 292

AP1. APPENDIX 1 – GLOSSARY 292
AP2. APPENDIX 2 – EQUATIONS USED 317

FIGURES

Figure C5.F1. Typical Eight-Cell Open Storage Module 51
Figure C5.F2. Typical Underground Storage Facilities 53
Figure C5.F3. Determination of Barricade Length and Height 62
Figure C5.F4. Portal Barricade Location, Height and Width 64
Figure C8.F1. Fire Division Symbols 78
Figure C8.F2. Chemical Hazard Symbols 79
Figure C8.F3. Supplemental Chemical Hazard Symbols 80
Figure C9.F1. ECM Orientation Effects on IMD: Side-to-Side Orientation 116
Figure C9.F2. ECM Orientation Effects on IMD: Side-to-Side Orientation 116
Figure C9.F3. ECM Orientation Effects on IMD 116

Figure C9.F4.	ECM Orientation Effects on IMD	122
Figure C9.F5.	ECM Orientation Effects on IMD: Canted ECM	122
Figure C9.F6.	ECM Orientation Effects on IMD: ECM of Significantly Different Lengths	122
Figure C9.F7.	ECM Orientation Effects on Barricaded and Unbarricaded IMD and ILD	123
Figure C9.F8.	High Performance Magazine (HPM) Orientation Effects	124
Figure C9.F9.	HAS Orientation Effects	171
Figure C9.F10.	Application of Separation Distances for Ship or Barge	179

TABLES

Table C2.T1.	Expected Peak Incident Pressures from HD 1.1 Events	24
Table C2.T2.	Probability of Window Breakage from Incident Pressure	25
Table C2.T3.	General Blast Effects on Personnel – Eardrum Rupture	27
Table C2.T4.	General Blast Effects on Personnel – Lung Damage	27
Table C2.T5.	General Blast Effects on Personnel – Lethality Due to Lung Rupture	28
Table C3.T1.	Storage Compatibility Mixing Chart	43
Table C5.T1.	HD 1.1 IMD for Barricaded Open Storage Module	52
Table C5.T2.	Chamber Separation Distances Required to Prevent Damage and Propagation by Rock Spall	58
Table C8.T1.	Fire Divisions	76
Table C8.T2.	Fire Division Symbols	77
Table C8.T3.	Compatibility Group and Chemical Hazard Symbols Required for Storage of Chemical Ammunition and Substances	81
Table C8.T4.	Emergency Withdrawal Distances for Non-Essential Personnel	85
Table C9.T1.	HD 1.1 IBD and PTRD	99
Table C9.T2.	HD 1.1 HFD	102
Table C9.T3.	HFD for Open Stacks of Selected HD 1.1 AE	104
Table C9.T4.	HD 1.1 ILD from ECM	111
Table C9.T5.	HD 1.1 ILD	114
Table C9.T6.	HD 1.1 IMD Hazard Factors	117
Table C9.T7A.	QD for HD 1.1 AE for K = 1.1, 1.25, 2, 2.75, 4.5, and 5	118
Table C9.T7B.	QD for HD 1.1 AE for K = 6, 8, 9, 11, 18, and 40	120
Table C9.T8.	Summary of HD 1.2.1, 1.2.2, and 1.2.3 QD	128
Table C9.T9.	HD 1.2.1 QD (IBD, PTRD, ILD) for AE With NEWQD > 1.60 lbs [0.73 kg]	130
Table C9.T10.	HDD for HD 1.2.1 AE Stored in Structures That Can Contribute to the Debris Hazard	133
Table C9.T11.	HD 1.2.2 QD (IBD, PTRD, ILD) for AE With NEWQD < 1.60 lbs [0.73 kg]	136
Table C9.T12.	HD 1.2.1, 1.2.2, and 1.2.3 Mixing Rules	138
Table C9.T13.	HD 1.3 QD	140
Table C9.T14.	HD 1.4 QD	143
Table C9.T15.	HD 1.6 QD	144
Table C9.T16.	Hazard Classifications and Minimum QD for Energetic Liquids	147

Table C9.T17.	Factors to Use When Converting Energetic Liquid Densities	149
Table C9.T18.	Energetic Liquid Equivalent Explosive Weights	154
Table C9.T19.	QD Criteria for OSHA/NFPA Class I – III Flammable and Combustible Energetic Liquids Storage in Detached Buildings or Tanks	156
Table C9.T20.	QD Criteria for Energetic Liquid Oxidizer (Excluding Liquid Oxygen) Storage in Detached Buildings or Tanks	157
Table C9.T21.	QD Criteria for Liquid Oxygen Storage in Detached Buildings or Tanks	159
Table C9.T22.	QD Criteria for Liquid Hydrogen and Bulk Quantities of Hydrazines	160
Table C9.T23.	HD 1.1 QD for Military Aircraft Parking Areas	166
Table C9.T24.	Application of AE Separation Distances for Airfields and Heliports	167
Table C9.T25.	Minimum Hazard Factor for HAS for Propagation Prevention	169
Table C9.T26.	Minimum Hazard Factor for HAS for Asset Preservation	170
Table C9.T27.	QD from a U.S. Third Generation HAS PES to an Unhardened ES	171
TableC9.T28.	Variation of MPS QD Factors With Loadout	175
Table C9.T29.	Distances to Protect Against Ground Shock	184
Table C9.T30.	Functions of Loading Density	185
Table C9.T31.	Debris Dispersal Function	186
Table C9.T32.	Off-Axis Distance Ratios	189
Table C9.T33.	Values for Ratio, $D_{HYD}/V_E^{1/2.8}$	191
Table C9.T34.	Scaled IBD for Airblast Without Mitigating Devices	192
Table C9.T35.	Default Maximum Case Fragment Distances for Intentional Detonations	196
Table C9.T36.	Maximum Case Fragment Distances for Selected Single Item Detonations	199
Table C9.T37.	Criteria for Non-DoD Explosives Activities on DoD Installations	211
Table C10.T1.	QD for BLAHA and BLSA	218
Table C10.T2.	QD Requirements for Armored Vehicles	221
Table C10.T3.	QD for Field Storage and Handling Areas	224
Table C10.T4.	QD for Contingency, Combat, and MOOTW Airfields	227
Table C11.T1.	Airborne Exposure Limits	230
Table C11.T2.	PPE and Employee Exposure Potential	232
Table C12.T1.	Hazardous Waste Control Limits (HWCL)	252
Table C12.T2.	Health-Based Environmental Screening Levels (HBESL)	252

REFERENCES

(a) DoD Directive 6055.9E, "Explosives Safety Management and the DoD Explosives Safety Board," August 19, 2005

(b) DoD 8910.1-M, "DoD Procedures for Management of Information Requirements," June 1998

(c) Department of Defense Explosives Safety Board (DDESB) Technical Paper (TP) No. 17, DDESB Blast Effects Computer Version 6.0 User's Manual and Documentation, March 10, 2005[1]

(d) Technical Bulletin (TB) 700-2, Naval Sea Systems Command Instruction (NAVSEAINST) 8020.8B, Technical Order (TO) 11A-1-47, Defense Logistics Agency Regulations (DLAR) 8220.1, "Department of Defense Ammunition and Explosives Hazard Classification Procedures," January 5, 1998[1]

(e) Title 49, Code of Federal Regulations (CFR), Parts 171 to 177, Subchapter C, "Hazardous Materials Regulations," current edition

(f) ST/SG/AC.10/Revision 12, "UN Recommendations on the Transport of Dangerous Goods Model Regulations Volumes I and II," Thirteenth Revised Edition, 2003[2]

(g) Technical Manual (TM) 5-1300, Naval Facilities Engineering Command (NAVFAC) P-397, Air Force Manual (AFM) 88-22, "Structures to Resist the Effects of Accidental Explosions," November 28, 1990[1]

(h) Military Standard (MIL-STD)-398, "Shields, Operational for Ammunition Operations, Criteria for Design and Tests for Acceptance," November 5, 1976[3]

(i) Military Standard (MIL-STD)-1474D, "Noise Limits," August 29, 1997[3]

(j) Department of Defense Explosives Safety Board (DDESB) Technical Paper (TP) No. 15, Approved Protective Construction (Version 2.0), June 2004[1]

(k) U. S. Army Corps of Engineers Report HNDED-CS-S-95-01, "Guide For Evaluating Blast Resistance Of Nonstandard Magazines," U.S. Army Corps of Engineers Engineering Support Center, Huntsville, AL, January 1995[4]

(l) National Fire Protection Association (NFPA) 70, "National Electric Code," current version[5]

(m) National Fire Protection Association (NFPA) 780, "Lightning Protection Code," current version[5]

(n) Sections 11001-11022 of title 42, United States Code

(o) Department of Defense Explosives Safety Board (DDESB) Technical Paper (TP) No. 13, "Prediction of Building Debris for Quantity-Distance Siting," April 1991[1]

(p) Department of Defense Explosives Safety Board (DDESB) Technical Paper (TP) No. 16, Revision 2, Methodologies for Calculating Primary Fragment Characteristics, October 17, 2005[1]

(q) Department of Defense Explosives Safety Board (DDESB) Technical Paper (TP) No. 10, Change 3, “Methodology For Chemical Hazard Prediction," June 1980[1]

(r) Title 29, Code of Federal Regulations, Part 1910.106, “Occupational Safety and Health Standards,” current edition

(s) National Fire Protection Association (NFPA) 30, “Flammable and Combustible Liquids Code,” current version[5]

(t) National Fire Protection Association (NFPA) 430, “Code for the Storage of Liquid and Solid Oxidizers,” current version[5]

(u) American Society of Mechanical Engineers (ASME) Boiler and Pressure Vessel Code, Section VIII, Rules for Construction of Pressure Vessels, Division 1/Division 2, current version[6]

(v) Wilton, C., “Investigation of the Explosive Potential of the Hybrid Propellant Combinations N_2O_4/Polybutadiene-Acrylic Acid-Acrolyonitrile (PBAN) and Chlorine Trifluoride (CTF)/PBAN,” AFRPL-Technical Report (TR)-67-124, 1967 (AD A003 595)[7]

(w) National Fire Protection Association (NFPA) 251, “Standard Methods of Tests of Endurance of Building Construction and Materials,” current version[5]

(x) National Fire Protection Association (NFPA) 50, “Standard for Bulk Oxygen Systems at Consumer Sites,” current version[5]

(y) Zabetakis, M. G. and Burgess, D. S., “Research on the Hazards Associated With the Production and Handling of Liquid Hydrogen,” U.S. Department of the Interior, Bureau of Mines Report 5707, 1961[8]

(z) Title 14, Code of Federal Regulations, Part 77, “Objects Affecting Navigable Airspace,” current edition

(aa) DoD 4500.9-R, “Defense Transportation Regulation – Part II, Cargo,” May 2003

(ab) Military Standard (MIL-STD)-882D, “Standard Practice for System Safety,” February 10, 2000[3]

(ac) Whitacre, C. G., et al, “Personal Computer Program For Chemical Hazard Prediction (D2PC),” Chemical Research Development and Engineering Center (CRDEC)-TR-87021, January 1987 (AD A177 622)[7]

(ad) DoD Instruction 6055.1, “DoD Safety and Occupational Health (SOH) Program,” August 19, 1998

(ae) DoD Instruction 6055.5, “Industrial Hygiene and Occupational Health,” May 6, 1996

(af) Joblove, Louis, et al, “Engineering Guide For Fire Protection and Detection Systems At Army Plants,” ARLCD-CR-80049 (AD A095 040)[7]

(ag) Management Guidance for the Defense Environmental Restoration Program (DERP) Guidance, Deputy Undersecretary of Defense (Installations & Environment) (DUSD(I&E)), September 2001[9]

(ah) Section 2710 of title 10, United States Code

(ai) Department of Defense Explosives Safety Board (DDESB) Technical Paper (TP) No. 18, Minimum Qualifications for Unexploded Ordnance (UXO) Technicians and Personnel, December 14, 2004[1]

(aj) DoD Instruction 6055.7, "Accident Investigation, Reporting, And Record Keeping," October 3, 2000

(ak) DoD 5400.11-R, "Department of Defense Privacy Program," May 14, 2007

(al) Title 40, Code of Federal Regulations, Part 266, Subpart M, "Military Munitions," current edition

(am) Section 6901 of title 42, United States Code

(an) Title 40, Code of Federal Regulations, "Protection of the Environment," current edition

(ao) Section 1512 of title 50, United States Code

(ap) DoD Instruction 4140.62, "Management and Disposition of Material Potentially Presenting an Explosive Hazard (MPPEH)," December 3, 2004

(aq) Military Handbook (MIL-HDBK)-240, Hazards of Electromagnetic Radiation to Ordnance (HERO) Test Guide, November 1, 2002[3]

(ar) Joint Publication 1-02, "DoD Dictionary of Military and Associated Terms," as amended

(as) MIL-HDBK-237, Electromagnetic Environmental Effects on Platforms, Systems, and Equipment, July 17, 2001[3]

(at) Section 101 of title 10, United States Code

(au) Section 2011 et seq. of title 42, United States Code

(av) Section 1521 (j) (1) of title 50, United States Code

---

[1] Available from DDESB, Room 856C, Hoffman Building I, 2461 Eisenhower Avenue, Alexandria, VA 22331-0600; Phone: 703-325-0891; Fax: 703-325-6227

[2] United Nations, New York, NY 10017; Phone: 212-963-8302

[3] Defense Automated Printing, 700 Robbins Avenue, Philadelphia, PA 19111; Phone: 215-697-2179

[4] U.S. Army Engineer Division, Code: CEHNC-ED-CS-S, P.O. Box 1600, Huntsville, AL 35807-4301; Phone: 256-895-1829

[5] NFPA, 1 Batterymarch Park, Quincy, MA 02169-7471; Phone: 617-770-3000; Fax: 617-770-0700

[6] ASME International, 22 Law Drive, Box 2900, Fairfield, NJ 07007-2900; Phone: 800-843-2763; International: 973-882-1167; Fax: 973-882-1717

[7] Defense Technical Information Center, Fort Belvoir, VA; Phone: 800-225-3842

[8] Chemical Propulsion Information Agency (CPIA) Accession Number 1964-0291, CPIA, The

Johns Hopkins University, 10630 Little Patuxent Parkway, Suite 202, Columbia, MD 21044-3204; Phone: 410-992-7300; Fax: 410-730-4969

[9] DUSD(I&E), 3000 Defense Pentagon, Washington, D.C. 20301-3000; Phone: 703-695-6107

ACRONYMS AND ABBREVIATIONS

AAE	arms, ammunition, and explosives
AAR	after action report
AC	hydrogen cyanide
ADCAP	advanced capability
ADUSD (ESOH)	Assistant Deputy Under Secretary of Defense (Environment, Safety and Occupational Health)
AE	ammunition and explosives
AEL	airborne exposure limit
AFM	Air Force manual
AFR	Air Force regulation
AFRPL	Air Force Rocket Propulsion Laboratory
AGM	aboveground magazine
AGS	aboveground structure/site
AGS (H)	AGS, heavy wall
AGS (H/R)	AGS, heavy wall and roof
AGS (L)	AGS, light
ANFO	ammonium nitrate/fuel oil
APZ	accident potential zone
AR	Army regulation
ASME	American Society of Mechanical Engineers
ASTM	American Society for Testing and Materials
ASU	ammunition storage unit
B	barricaded
BATF	Bureau of Alcohol, Tobacco and Firearms
BEM	buried explosion module
BIP	blow-in-place
BLAHA	basic load ammunition holding area
BLSA	basic load storage area
BTTN	butane-trio-trinitrate
CA	chemical agent
CAD	cartridge activated device
CAIS	chemical agent identification set
CALA	combat aircraft loading area
CAPA	combat aircraft parking area
CBU	cluster bomb unit
CCI	controlled, cryptographic item
CE	conditional exemption
CFR	Code of Federal Regulations
CG	carbonyl dichloride (also known as phosgene)
CIC	commercial intermodal container
CK	cyanogen chloride

CoE	Corps of Engineers
CONUS	Continental United States
CRDEC	Chemical Research Development and Engineering Center
CSS	chemical safety submission
CTF	chlorine trifluoride
CWM	chemical warfare material
CZ	clear zone
DDESB	Department of Defense Explosives Safety Board
DERP	Defense Environmental Restoration Program
DEGDN	diethyleneglycoldinatrate
DLAR	Defense Logistics Agency regulation
DMM	discarded military munition
DoD	Department of Defense
DoDAC	Department of Defense ammunition code
DoE	Department of Energy
DoT	Department of Transportation
DPE	demilitarization protective ensemble
DUSD(I&E)	Deputy Under Secretary of Defense (Installations and Environment)
E3	electromagnetic environmental effects
EC	engineering control
ECM	earth-covered magazine
EE/CA	engineering evaluation/cost analysis
EED	electro-explosive device
EID	electrically initiated device
EIDS	extremely insensitive detonating substance
ELCG	energetic liquid compatibility group
EMC	electromagnetic compatibility
EMCON	emission control
EME	electromagnetic environment
EMI	electromagnetic interference
EMP	electromagnetic pulse
EMR	electromagnetic radiation
EMV	electromagnetic vulnerability
EOD	explosive ordnance disposal
EP	electronic protection
EPA	Environmental Protection Agency
EPCRA	Emergency Planning Community Right-To-Know Act
EQN	equation
ES	exposed site
ESM	explosives safety management
ESS	explosives safety submission
ESQD	explosives safety quantity distance
F	front

FAA	Federal Aviation Administration
FAE	fuel-air explosive
FARP	forward arming and refueling point
FB	front barricaded
FSC	Federal supply class
FU	front unbarricaded
FUDS	formerly used defense site
GA	dimethylaminoethoxy-cyanophosphine oxide (common name is tabun) (nerve agent)
GB	isopropyl methylphosphonofluoridate (common name is sarin) (nerve agent)
GD	pinacolyl methylphosphonofluoridate (common name is soman) (nerve agent)
GF	o-cyclohexyl methylphosphonofluoridate (common name is cyclosarin) (nerve agent)
GIS	geographic information system
GP	general purpose
GSA	General Services Administration
H	heavy wall
HAN	hydroxyl ammonium nitrate
HAS	hardened aircraft shelter
HBESL	health-based environmental screening level
HC	hexachlorethane
HD	Hazard Division
HDD	hazardous debris distance
HE	high explosive
HERF	hazards of electromagnetic radiation to fuel
HERO	hazards of electromagnetic radiation to ordnance
HERP	hazards of electromagnetic radiation to personnel
HEW	high explosive weight
HFD	hazardous fragment distance
H/HD	2,2’ dichlorodiethyl sulfide (common name is distilled mustard) (blister agent)
H/HT	60% HD and 40% 2,2’ dichloroethylthiodiethyl ether (common name is mustard-T mixture) (blister agent)
HMX	cyclotetramethylene-tetranitramine (also known as octogen)
HPM	high performance magazine
H/R	heavy wall/roof
HWCL	hazardous waste control limit
IAW	in accordance with
IBD	inhabited building distance
IHC	interim hazard classification
IHF	interim holding facility

ILD	intraline distance
IMD	intermagazine distance
IMO	International Maritime Organization
IR	infra-red
IRFNA	inhibited red fuming nitric acid
ISO	International Standardization Organization
JHCS	Joint Hazard Classification System
JOERAD	Joint Spectrum Center Ordnance Electromagnetic Environmental Effects Risk Assessment Database
JTF	Joint Task Force
JP	jet propellant
kPa	kilopascal
kV	kilovolt
L	light
L	dichloro (2-chlorovinyl) arsine (common name is lewisite) (blister agent)
LEPC	Local Emergency Planning Committee
LPS	lightning protection system
LUC	land use control
MC	munitions constituent
MCE	maximum credible event
MCO	Marine Corps Order
MEC	munitions and explosives of concern
MFD	maximum fragment distance
MGFD	munition with the greatest fragmentation distance
MIL-HDBK	Military Handbook
MIL-STD	Military Standard
MILVAN	military van
MK	mark
MMH	monomethylhydrazine
MMRP	Military Munitions Response Program
MON	mixed oxides of nitrogen
MOOTW	military operations other than war
MPPEH	material potentially presenting an explosive hazard
MPS	maritime prepositioning ship
MR	munitions rule
MRA	munitions response area
MRC	multiple round container
MRS	munitions response site
MSD	minimum separation distance
MWD	military working dog
MWR	morale, welfare, and recreation

NAVFAC	Naval Facilities Engineering Command
NALC	Navy Ammunition Logistic Code
NATO	North Atlantic Treaty Organization
NAVSEAINST	Naval Sea Systems Command Instruction
NDAI	no DoD action indicated
NEC	National Electrical Code
NEQ	net explosive quantity
NEW	net explosive weight
NEWQD	net explosive weight for quantity-distance
NFPA	National Fire Protection Association
NG	nitroglycerin
NIN	National Identification Number
NIOSH	National Institute of Occupational Safety and Health
NOFA	no further action
NP	napalm
NPW	net propellant weight
N/R	not required
NSN	National Stock Number
OB	open burning
OD	open detonation
OPNAVINST	Chief of Naval Operations Instruction
OSHA	Occupational Safety and Health Administration
PAD	propellant actuated device
PAED	public access exclusion distance
PES	potential explosion site
PETN	pentaerythritol tetranitrate
PBAN	polybutadiene-acrylic acid-acrolyonitrile
PINS	portable isotopic neutron spectroscopy
POL	petroleum, oils, lubricants
POV	privately owned vehicle
PPE	personnel protective equipment
PTR	public traffic route
PTRD	public traffic route distance
PWP	plasticized white phosphorus
QA/QC	quality assurance and quality control
QD	quantity-distance
R	rear
RCRA	Resource Conservation and Recovery Act
RCS	report control symbol
RCWM	recovered CWM
RDT&E	research, development, test, and evaluation
RDX	cyclotrimethylenetrinitramine (also known as cyclonite, hexogen, or royal

	demolition explosive)
RF	radio frequency
RI/FS	remedial investigation/feasibility study
RP	rocket propellant
RSP	render safe procedure
S	side
SCBA	self-contained breathing apparatus
SD	sympathetic detonation
SDW	substantial dividing wall
SG	sensitivity group
SOP	standard operating procedure
STEL	short-term exposure limit
TAPES	toxicologic agent protective ensemble, self-contained
TB	technical bulletin
TCRA	time critical removal action
TEA	triethyl aluminum
TEGDN	triethylene glycol dinitrate
TM	technical manual
TMETN	trimethylolethane trinitrate
TNT	trinitrotoluene
TO	technical order
TP	technical paper
TPA	thickened TEA
TR	technical report
TSD	team separation distance
TSDF	treatment storage disposal facility
TWA	time-weighted average
U	unbarricaded
UDMH	unsymmetrical dimethylhydrazine
UN	United Nations
U.S.	United States
USCG	U.S. Coast Guard
UXO	unexploded ordnance
VX	0-ethyl S-[2-(diisopropylamino) Ethyl] Methylphosphonothioate (nerve agent)
WP	white phosphorus
WPL	worker protection limit

C1. CHAPTER 1
INTRODUCTION

C1.1. GENERAL

C1.1.1. These explosive safety standards (hereafter referred to as "Standards") are issued under the authority of DoD Directive 6055.9E (Reference (a)). These Standards are designed to manage risks associated with DoD-titled ammunition and explosives (AE) by providing protection criteria to minimize serious injury, loss of life, and damage to property. It is DoD policy to comply with the applicable Federal and State laws and regulations. Where the Standard conflicts with such laws and regulations, DoD components shall ensure the safety of DoD personnel and the public while complying and notify the Chairman, DDESB, through its Board Member, of the conflict. These Standards are not intended to be so rigid as to prevent the DoD Components from accomplishing their assigned missions.

C1.1.2. Criteria provided by these Standards are given in English units (e.g., ft, lb, psi.) with metric equivalents shown in brackets (e.g., [m, kg, kilopascal (kPa)]).

C1.2. EXPLOSIVES SAFETY MANAGEMENT (ESM) POLICY

As established in DoD Directive 6055.9E (Reference (a)) and consistent with peacetime, contingency, or wartime operational requirements and corresponding DoD military munitions requirements from the broadest and most fundamental Explosives Safety Management (ESM) perspective, it is DoD policy to:

C1.2.1. Provide the maximum possible protection to people and property from the potential damaging effects of DoD military munitions (explosive and chemical). Applying the Standards herein provides only the minimum protection criteria for personnel and property, and greater protection should always be provided when practicable.

C1.2.2. Minimize exposures consistent with safe and efficient operations (i.e., expose the minimum number of people for the minimum time to the minimum amount of explosives or chemical agents).

C1.3. APPLICABILITY

These Standards:

C1.3.1. Apply to DoD-titled AE wherever it is located.

C1.3.2. Apply to DoD personnel and property when potentially endangered by known host-nation or off-installation AE hazards.

C1.3.3. Govern DoD facilities siting and construction, except as indicated in paragraph C1.3.5.

C1.3.4. Apply to the evaluation of non-DoD explosives siting submissions on DoD installations (see paragraph C9.8.22.).

C1.3.5. Do not apply for the exceptions described in subparagraphs C1.3.5.1. through C1.3.5.3. These exceptions must be documented per subparagraph C1.3.5.4.

C1.3.5.1. Existing facilities, or those approved for construction under then-current editions of these Standards. This exception applies for the balance of the useful lives of such facilities provided:

C1.3.5.1.1. The facility continues to be used for its intended purpose.

C1.3.5.1.2. The explosives safety hazards are not increased.

C1.3.5.1.3. Redesign or modification is not practicable.

C1.3.5.1.4. The quantity of AE cannot be reduced for reasons of operational necessity.

C1.3.5.2. Those planned facilities that do not meet these Standards, but have been certified by the Head of the DoD Component (see paragraph C1.5.4.) as essential for operational or other compelling reasons.

C1.3.5.3. To other situations that, upon analysis by both the DoD Component and the Department of Defense Explosives Safety Board (DDESB), are determined to provide the required degree of safety through use of protective construction or other specialized safety features.

C1.3.5.4. The DoD Components must document the above exceptions in permanent records. These records must include:

C1.3.5.4.1. The effective date the applicable Standards were first published.

C1.3.5.4.2. The date the deviant facility was either approved, from an explosives safety viewpoint, for use or was first used in the deviating manner.

C1.4. TERMINATION OF USE OF FACILITIES STORING AE

Each storage facility no longer used to store ammunition and explosives must undergo a process to ensure that AE and any visible explosives residues are removed within 180 days from the last use of the storage facility. Those procedures help ensure that no threats to human health or the environment remain when the unit is no longer to be used to store AE. (Ammunition storage

units (ASU) that have been used to store waste military munitions must also comply with the closure procedures in Chapter 14, section C14.6.) Those procedures shall include the following:

C1.4.1. Emptying the storage facility of all AE and related materials.

C1.4.2. Cleaning the storage facility, as required, to remove any visible explosives residue.

C1.4.3. Visually inspecting the storage facility for the presence of remaining ammunition or explosives or visible explosives residue by a knowledgeable individual appointed by the installation or responsible activity commander.

C1.4.4. Removing from the storage facility all fire and chemical hazard symbols and marking the storage facility as empty.

C1.4.5. Securing the storage facility to prevent inadvertent use or access.

C1.4.6. Notifying the applicable emergency response and regulatory authorities of the change in the storage facility's use.

C1.4.7. Recording the date the storage facility was inspected, the name and position of the inspector, and the results in permanent real estate records.

C1.5. WAIVERS, EXEMPTIONS, AND SECRETARIAL EXEMPTIONS OR CERTIFICATIONS

C1.5.1. General. When strategic or compelling operational requirements necessitate deviation from these Standards, the DoD Component shall:

C1.5.1.1. Acknowledge and accept the added risk to personnel or property.

C1.5.1.2. Document both the risk and methods used to reduce it to an acceptable level in relation to the operational requirements.

C1.5.2. Waivers. A waiver is a written authority that permits temporary deviation from these Standards for strategic or compelling operational requirements. Generally, it is granted for a period not to exceed 5 years pending termination of the waiver or correction of the waived conditions. Exceptional situations may require a waiver to be reissued to allow either completion of the operation requiring the waiver or time for completion of the corrective action. In such cases, the next higher approval authority shall reissue the waiver; the exception is when the head of the DoD Component or the responsible Combatant Commander has issued the waiver. Waivers shall be reviewed for applicability and currency at intervals not to exceed 2 years. Waivers may be granted by the official with both:

C1.5.2.1. The assigned responsibilities consistent with the level of risk.

C1.5.2.2. The authority to control the resources required to accomplish the corrective action.

C1.5.3. Exemptions. An exemption is a written authority that permits long-term noncompliance with these Standards for strategic or compelling operational requirements. Exemptions shall be reviewed for applicability and currency at intervals not to exceed 5 years. Exemptions may be granted by law, Congressional action, and the official assigned responsibilities consistent with the level of risk.

C1.5.4. Secretarial Exemptions or Certifications. A Secretarial Exemption or Certification is a written authority granted by a Secretary of a Military Department to deviate from the requirements of these Standards to allow the construction of new potential explosion sites (PES) or exposed sites (ES). To validate the strategic or compelling operational requirements and ensure the identification of risks and exposures, these exemptions or certifications shall be reviewed at intervals not to exceed 5 years.

C1.5.5. Report Control Symbol (RCS) DD-AT&L(AR)1643. (See DoD 8910.1-M (Reference (b)).) When the DDESB requests information on exemptions and waivers, the DoD Components shall provide the following, as applicable:

C1.5.5.1. Identification number (DoD Component-derived).

C1.5.5.2. Classification (waiver or exemption); approval authority's title; and date of approval, expiration, or cancellation, as applicable.

C1.5.5.3. Location.

C1.5.5.4. Condition waived or exempted.

C1.5.5.5. Net Explosive Weight (NEW) or Net Explosive Weight for Quantity-Distance (NEWQD) by Hazard Division (HD) at a PES.

C1.5.5.6. Distance from the PES to any ES and a brief description of the ES to include: type, estimated value of any property involved, and location of the property (e.g., on or off installation).

C1.5 5.7. Estimated number of DoD and non-DoD personnel located at the ES.

C1.5.5.8. Calculated hazard distances (see public exclusion distance), as applicable.

C1.5.5.9. Planned corrective action, to include the expected completion date.

C1.5.5.9.1. Estimated cost to correct.

C1.5.5.9.2. Military construction project number, if assigned.

C2. CHAPTER 2
REACTION EFFECTS

C2.1. INTRODUCTION

This chapter describes the expected effects of AE reactions.

C2.2. HD 1.1 EFFECTS

C2.2.1. Blast

C2.2.1.1. Blast Wave Phenomena. In an incident involving HD 1.1 or HD 1.1 with any other HD (a HD 1.1 event), the violent release of energy creates a sudden and intense pressure disturbance termed the "blast wave." The blast wave is characterized by an almost instantaneous rise from ambient pressure to a peak incident pressure (P_i). This pressure increase, or "shock front," travels radially outward from the detonation point, with a diminishing velocity that is always in excess of the speed of sound in that medium. Gas molecules making up the front move at lower velocities. This velocity, which is called the "particle velocity," is associated with the "dynamic pressure," or the pressure formed by the winds produced by the shock front.

C2.2.1.1.1. As the shock front expands into increasingly larger volumes of the medium, the incident pressure decreases and, generally, the duration of the pressure-pulse increases.

C2.2.1.1.2. If the shock wave impinges a rigid surface (e.g., a building) at an angle to the direction of the wave's propagation, a reflected pressure is instantly developed on the surface and this pressure rises to a value that exceeds the incident pressure. This reflected pressure is a function of the incident wave's pressure and the angle formed between the rigid surface and the plane of the shock front.

C2.2.1.2. Partially Confined Explosions. When an explosion occurs within a structure, the peak pressure associated with the initial shock front will be both high and amplified by reflections within the structure. In addition, the accumulation of gases from the explosion will exert additional pressure and increase the load duration within the structure. This effect may damage or destroy the structure unless the structure is designed to either withstand or vent the gas and shock pressures. Structures that have one or more strengthened walls may be vented for relief of excessive gas by either using frangible construction for the remaining walls or roof or through the use of openings. This type of construction will allow the gas from an internal explosion to spill out of the structure. Once released from confinement, these pressures, referred to as "exterior" or "leakage" pressures, expand radially and may affect external structures or personnel.

C2.2.1.3. Quantity-Distance (QD) – K-factors. Throughout this Standard, NEW is used to calculate Quantity-Distance (QD) by means of a formula of the type D (ft) = $K \bullet W^{1/3}$, where

"D" is the distance in feet, "K" is a factor (also called K-factor) that is dependent upon the risk assumed or permitted, and "W" is the NEW in pounds. When metric units are used, the symbol "Q" denotes Net Explosive Quantity (NEQ) in kilograms. In the formula D (m) = $K_m \bullet Q^{1/3}$, the distance "D" is expressed in meters. Thus, the units of the K-factor ("K" in the English system) are ft/lb1/3 and ("Km" in the metric system) m/kg1/3. The value of "K" in English units is approximately 2.52 times "K_m." For example, if D (m) = $6 \bullet Q^{1/3}$, then D (ft) = $15.12 \bullet W^{1/3}$. Distance requirements determined by the formula with English units are sometimes expressed by the value of "K," using the terminology K9, K11, K18, to mean K = 9, K = 11, and K = 18.

C2.2.1.4. Expected Blast Pressures at QD. Table C2.T1. presents the incident pressures that would be expected at various K-factors from HD 1.1 events.

Table C2.T1. Expected Peak Incident Pressures from HD 1.1 Events

LOCATION	**K-FACTOR ($ft/lb^{1/3}$)** ***Km-FACTOR [$m/kg^{1/3}$]***	**INCIDENT PRESSURE (psi)** ***[kPa]***
Barricaded Aboveground Intermagazine Distance (IMD)	6 *2.38*	27 *186.2*
Barricaded Intraline Distance (ILD)	9 *3.57*	12 *82.7*
Unbarricaded Aboveground IMD	11 *4.36*	8 *55.2*
Unbarricaded ILD	18 *7.14*	3.5 *24.1*
Public Traffic Route (PTR) Distance		
W< 100,000 lbs	24	2.3
Q< 45,400 kg	*9.52*	*15.9*
W> 250,000 lbs	30	1.7
Q> 113,400 kg	*11.9*	*11.7*
Inhabited Building Distance (IBD)		
W< 100,000 lbs	40	1.2
Q< 45,400 kg	*15.87*	*8.3*
W> 250,000 lbs	50	0.9
Q> 113,400 kg	*19.84*	*6.2*

C2.2.1.5. General Blast Effects On Structures

C2.2.1.5.1. Conventional Structures. Conventional structures are generally designed to withstand roof-snow loads of 0-50 pounds per square foot [0-2.4 kPa] or wind loads up to 90 miles per hour [145 kilometers per hour] or both. At 90 mph [145 kph], the wind load equates to

0.14 psi [1.0 kPa]. Given the pressures shown in Table C2.T1. for the selected K-factors, it is evident that, even at IBD, conventional structures may not provide complete protection from the blast. Generally, the weakest portions of any conventional structure are the windows. Table C2.T2. provides the probability of breaking typical windows at various K-factors and associated incident pressures from HD 1.1 events.

Table C2.T2. Probability of Window Breakage from Incident Pressure

K-FACTOR (ft/lb$^{1/3}$) ***Km-FACTOR*** *[m/kg$^{1/3}$]*	**Incident Pressure** (psi) *[kPa]*	**Probability of Breakage (%) for Windows facing PES**		
		Window 1	**Window 2**	**Window 3**
40 *15.87*	1.2 *8.3*	85	100	100
50 *19.84*	0.9 *6.2*	60	100	100
60 *23.80*	0.7 *4.8*	41	100	100
70 *27.77*	0.6 *4.1*	26	100	100
80 *31.74*	0.5 *3.4*	16	94	100
90 *35.70*	0.4 *2.8*	10	76	100
100 *39.67*	0.3 *2.1*	6	55	100
150 *59.51*	0.2 *1.4*	1	8	49
328 *130.12*	0.0655 *0.45*	0	0.1	0.8

Window 1: 12" x 24" x 0.088" Float annealed (area = 2 ft^2)

30.5 cm x 61 cm x 0.0.223 cm Float annealed (area = 0.186 m^2)

Window 2: 24" x 24" x 0.088" Float annealed (area = 4 ft^2)

61 cm x 61 cm x 0.0.223 cm Float annealed (area = 0.372 m^2)

Window 3: 42" x 36" x 0.12" Float annealed (area = 10.5 ft^2)

106.7 cm x 91.4 cm x 0.0.395 cm Float annealed (area = 0.975 m^2)

C2.2.1.5.2. Above Ground Structures (AGS). These are generally considered conventional structures and provide little protection from blast or fragmentation. (See paragraph C2.2.5.).

C2.2.1.5.3. Earth-Covered Magazines (ECM). High reflected pressure and impulse produced by an explosion at an adjacent ECM can damage doors and headwalls and propel debris into an ECM so that explosion is communicated by impact of such debris upon the contents. When separated from each other by the minimum distances required by Table C9.T6., ECM (see paragraph C5.2.1.) provide virtually complete protection of AE against the propagation effects of an explosion. However, AE in adjacent ECM may be damaged and structural damage ranging from cracks in concrete, damage to ventilators and doors, to complete structural failure, may occur. (When ECM containing HD 1.1 AE are sited so that any one is in the forward sector of another, the two must be separated by distances greater than the minimum permitted for side-to-side orientations. The greater distances are required primarily for the protection of door and headwall structures against blast from a PES forward of the exposed magazine, and to a lesser extent due to the directionality of effects from the source.)

C2.2.1.5.4. Underground Storage Facilities. Underground facilities sited per section C9.7. provide a high degree of protection against propagation of an explosion between chambers, and between underground and aboveground structures. An HD 1.1 explosion in an underground storage facility causes very high pressures of prolonged duration. Blast waves and the accompanying gas flows will travel throughout the underground facility at high velocity.

C2.2.1.5.5. Barricaded Open-Storage Modules. Barricaded open-storage modules (see paragraph C5.2.2.) provide a high degree of protection against propagation of explosion. However, if flammable materials are present in nearby cells, subsequent propagation of explosion by fire is possible. When an explosion occurs, AE in adjacent modules separated by K1.1 [K_m 0.44] will be thrown tens of meters, covered with earth, and unavailable for use until extensive uncovering operations, and possibly maintenance, are completed. Items at K2.52 [K_m 1.0] separation distance from a donor explosion are expected to be readily accessible.

C2.2.1.5.6. High Performance Magazine (HPM). When separated from other AE storage magazines by the minimum distances required by Table C9.T6., the HPM provides virtually complete protection of AE against the propagation effects of an explosion. The HPM's 2-story transfer and storage areas are enclosed by a pre-engineered metal building, which may be severely damaged as a result of an explosion at a nearby PES. The amount of damage to be expected at various pressure levels is described in paragraph C2.2.5. Access to the AE in a HPM may require extensive cleanup and the use of a mobile crane, unless special design considerations are incorporated into the metal building design. The HPM contains multiple storage cells, which are designed to limit the maximum credible event, as discussed in subparagraph C9.3.1.1.3. In the event of an internal explosion involving the maximum credible event (MCE), the pre-engineered metal building can be expected to be completely destroyed, and AE not involved in the explosion can be expected to be significantly damaged and no longer usable.

C2.2.1.6. General Blast Effects on Personnel. Tables C2.T3. through C2.T5. describe the expected effects of blasts on personnel.

C2.2.1.7. Computation of Blast Effects. Many of the blast effects described in this section were computed with the DDESB Blast Effects Computer (Reference (c)), which can be used to estimate similar effects associated with various NEW, facilities, and distances.

Table C2.T3. General Blast Effects on Personnel – Eardrum Rupture

EFFECT	Incident Pressure (psi) *[kPa]*	K-FACTOR (ft/lb$^{1/3}$) *Km-FACTOR [m/kg$^{1/3}$]*	PROBABILITY (%)
Eardrum Rupture	3.0 *20.7*	20.0 *7.87*	1
	3.6 *24.5*	17.9 *7.08*	2
	4.9 *33.8*	14.6 *5.78*	5
	6.6 *45.7*	12.2 *4.84*	10
	9.0 *62.1*	10.3 *4.10*	20
	15.0 *103.6*	8.0 *3.16*	50
	74.4 *513.0*	3.9 *1.55*	99

Table C2.T4. General Blast Effects on Personnel – Lung Damage

EFFECT	Incident Pressure (psi) *[kPa]*	Pulse Duration (ms)
Lung Damage	174 *1200*	0.5
	94 *648*	1
	31 *214*	5
	22 *152*	10
	15 *103.4*	50
	15 *103.4*	100

Table C2.T5. General Blast Effects on Personnel – Lethality Due to Lung Rupture

EFFECT*	**Weight (lbs)** *[kg]*	**Range (ft)** *[m]*	**K-FACTOR ($ft/lb^{1/3}$)** ***Km-FACTOR*** *[$m/kg^{1/3}$]*	**Incident Pressure (psi)** *[kPa]*	**Pulse Duration (ms)**	**Positive Impulse (psi-ms)** *[kPa-s]*
Lethality due to Lung Rupture	8,000	35.8	1.79	386.9	8.8	412.5
	3,628.7	*10.92*	*0.71*	*2667.8*		*2,844.5*
	27,000	99.8	3.33	107.1	51.1	665.6
	12,247	*30.42*	*1.32*	*738.3*		*4,589.2*
	125,000	189.8	3.80	79.3	82.6	985.3
	56,699	*57.85*	*1.51*	*546.6*		*6,793.8*

* Lethality due to lung rupture is caused by a combination of pressure and impulse. This combination will vary with the charge weight.
(NOTE: In this example, the probability of lethality is assumed to be 99.9%.)

C2.2.2. Fragments

C2.2.2.1. General. An important consideration in the analysis of the hazards associated with an explosion is the effect of any fragments produced. Although most common in HD 1.1 or HD 1.2 events, fragmentation may occur in any incident involving AE. Depending on their origin, fragments are referred to as "primary" or "secondary" fragments.

C2.2.2.1.1. Primary fragments result from the shattering of a container (e.g., shell casings, kettles, hoppers, and other containers used in the manufacture of explosives and rocket engine housings) in direct contact with the explosive. These fragments usually are small, initially travel at thousands of feet per second, and may be lethal at long distances from an explosion.

C2.2.2.1.2. Secondary fragments are debris from structures and other items in close proximity to the explosion. These fragments, which are somewhat larger in size than primary fragments and initially travel at hundreds of feet per second, do not normally travel as far as primary fragments.

C2.2.2.1.3. The earth cover of an underground facility may rupture and create a significant debris hazard.

C2.2.2.1.4. A hazardous fragment is one having an impact energy of 58 ft-lb [79 joules] or greater.

C2.2.2.1.5. The Hazardous Fragment Distance is the distance at which the areal density of hazardous fragments or debris becomes one per 600 ft^2 [55.7 m^2].

C2.2.3. Thermal Hazards

C2.2.3.1. General. Generally, thermal hazards from a HD 1.1 event are of less concern than blast and fragment hazards.

C2.2.3.2. Personnel. It normally takes longer to incur injury from thermal effects than from either blast or fragmentation effects because both blast and fragmentation occur almost instantaneously. The time available to react to a thermal event increases survivability.

C2.2.3.3. Structures, Material, and AE. The primary thermal effect on structures, material, and AE is their partial or total destruction by fire. The primary concern with a fire involving AE is that it may transition to a more severe reaction, such as a detonation.

C2.2.4. Groundshock and Cratering

C2.2.4.1. General

C2.2.4.1.1. In an airburst, there may be a downward propagation of groundshock and cratering may be reduced or eliminated.

C2.2.4.1.2. In a surface burst, groundshock is generated and cratering can be significant.

C2.2.4.1.3. A buried or partially buried detonation produces the strongest groundshock; however, if the explosion is deep enough, no crater will be formed.

C2.2.4.2. Underground Facilities. AE protection can be achieved by proper chamber spacing. An HD 1.1 explosion will produce ground shocks that may rupture the earth cover and eject debris. (See section C9.7.)

C2.2.5. Expected Consequences

C2.2.5.1. Barricaded Aboveground Magazine (AGM) Distance - $6W^{1/3}$ ft [$2.38Q^{1/3}$ m] - 27 psi [186.1 kPa]. At this distance:

C2.2.5.1.1. Unstrengthened buildings will be destroyed.

C2.2.5.1.2. Personnel will be killed by blast, by being struck by debris, or by impact against hard surfaces.

C2.2.5.1.3. Transport vehicles will be overturned and crushed by the blast.

C2.2.5.1.4. Explosives-loaded vessels will be damaged severely, with propagation of explosion likely.

C2.2.5.1.5. Aircraft will be destroyed by blast, thermal, and debris effects.

C2.2.5.1.6. Control. Barricades are effective in preventing immediate propagation of explosion by high-velocity, low-angle fragments. However, they provide only limited protection

against any delayed propagation of explosives caused by a fire resulting from high-angle firebrands.

C2.2.5.2. Barricaded Intraline Distance (ILD) - $9W^{1/3}$ ft [$3.57Q^{1/3}$m] - 12 psi [82.7 kPa]. At this distance:

C2.2.5.2.1. Unstrengthened buildings will suffer severe structural damage approaching total destruction.

C2.2.5.2.2. Personnel will be subject to severe injuries or death from direct blast, building collapse, or translation.

C2.2.5.2.3. Aircraft will be damaged beyond economical repair both by blast and fragments. If the aircraft are loaded with explosives, delayed explosions are likely to result from subsequent fires.

C2.2.5.2.4. Transport vehicles will be damaged heavily, probably to the extent of total loss.

C2.2.5.2.5. Improperly designed barricades or structures may increase the hazard from flying debris, or may collapse in such a manner as to increase the risk to personnel and equipment.

C2.2.5.2.6. Control. Barricading is required. Direct propagation of explosion between two explosive locations is unlikely when barricades are placed between them to intercept high-velocity, low-angle fragments. Exposed structures containing high-value, mission-critical equipment or personnel may require hardening.

C2.2.5.3. Unbarricaded AGM Distance - $11W^{1/3}$ ft [$4.36Q^{1/3}$m] - 8 psi [55.3 kPa]. At this distance:

C2.2.5.3.1. Unstrengthened buildings will suffer damage approaching total destruction.

C2.2.5.3.2. Personnel are likely to be injured seriously due to blast, fragments, debris, and translation.

C2.2.5.3.3. There is a 15 percent risk of eardrum rupture.

C2.2.5.3.4. Explosives-loaded vessels are likely to be damaged extensively and delayed propagation of explosion may occur.

C2.2.5.3.5. Aircraft will be damaged heavily by blast and fragments; destruction by resulting fire is likely.

C2.2.5.3.6. Transport vehicles will sustain severe body damage, minor engine damage, and total glass breakage.

C2.2.5.3.7. Control. Barricading will significantly reduce the risk of propagation of explosion and injury of personnel by high-velocity, low-angle fragments.

C2.2.5.4. Unbarricaded ILD - $18W^{1/3}$ ft [$7.14Q^{1/3}$ m] - 3.5 psi [24 kPa]. At this distance:

C2.2.5.4.1. Direct propagation of explosion is not expected.

C2.2.5.4.2. Delayed propagation of an explosion may occur at the ES, as either a direct result of a fire or as a result of equipment failure.

C2.2.5.4.3. Damage to unstrengthened buildings may approximate 50 percent, or more, of the total replacement cost.

C2.2.5.4.4. There is a two percent chance of eardrum damage to personnel.

C2.2.5.4.5. Personnel may suffer serious injuries from fragments, debris, firebrands, or other objects.

C2.2.5.4.6. Fragments could damage the decks and superstructure of cargo ships and overpressure could buckle their doors and bulkheads on weather decks.

C2.2.5.4.7. Aircraft can be expected to suffer considerable structural damage from blast. Fragments and debris are likely to cause severe damage to aircraft at distances calculated from the formula $18W^{1/3}$ [$7.2Q^{1/3}$] when small quantities of explosives are involved.

C2.2.5.4.8. Transport vehicles will incur extensive, but not severe, body and glass damage consisting mainly of dishing of body panels and cracks in shatter-resistant window glass.

C2.2.5.4.9. Control. Suitably designed suppressive construction at PES or protective construction at ES may be practical for some situations. Such construction is encouraged when there is insufficient distance to provide the required protection.

C2.2.5.5. Public Traffic Route Distance (PTRD) (under 100,000 lbs of High Explosives (HE)) $24W^{1/3}$ ft [$9.52Q^{1/3}$ m] - 2.3 psi [15.8 kPa]. At this distance:

C2.2.5.5.1. Unstrengthened buildings can be expected to sustain damage approximately 20 percent of the replacement cost.

C2.2.5.5.2. Occupants of exposed structures may suffer temporary hearing loss or injury from blast effects, building debris and displacement.

C2.2.5.5.3. Although personnel in the open are not expected to be killed or seriously injured by blast effects, fragments and debris may cause some injuries. The extent of these

injuries depends largely upon the PES structure and the amount and fragmentation characteristics of the AE involved.

C2.2.5.5.4. Vehicles on the road should suffer little damage, unless they are hit by a fragment or the blast causes a momentary loss of control.

C2.2.5.5.5. Aircraft may suffer some damage to the fuselage from blast and possible fragment penetration, but should be operational with minor repair.

C2.2.5.5.6. Cargo-type ships should suffer minor damage to deck structure and exposed electronics from blast and possible fragment penetration, but such damage should be readily repairable.

C2.2.5.5.7. Control. Barricading can reduce the risk of injury or damage due to fragments for limited quantities of AE at a PES. When practical, suitably designed suppressive construction at the PES or protective construction at the ES may also provide some protection.

C2.2.5.6. PTRD (over 250,000 lbs HE) $30W^{1/3}$ ft [$11.9Q^{1/3}$ m] - 1.7 psi [11.7 kPa]. At this distance:

C2.2.5.6.1. Unstrengthened buildings can be expected to sustain damage that may approximate 10 percent of their replacement cost.

C2.2.5.6.2. Occupants of exposed, unstrengthened structures may be injured by secondary blast effects, such as falling building debris.

C2.2.5.6.3. Pilots of aircraft that are landing or taking off may lose control and crash.

C2.2.5.6.4. Parked military and commercial aircraft will likely sustain minor damage due to blast, but should remain airworthy.

C2.2.5.6.5. Although personnel in the open are not expected to be killed or seriously injured by blast effects, fragments and debris may cause some injuries. The extent of these injuries will largely depend upon the PES structure, the NEW, and the fragmentation characteristics of the AE involved.

C2.2.5.6.6. Control. Barricading or the application of minimum fragmentation distance requirements may reduce the risk of injury or damage due to fragments for limited quantities of AE at a PES.

C2.2.5.7. Inhabited Building Distance (IBD) $40W^{1/3}$ ft - $50W^{1/3}$ ft [$15.87Q^{1/3}$ - $19.8Q^{1/3}$ m] - 1.2 psi - 0.90 psi [8.3 kPa - 6.2 kPa]. At this distance:

C2.2.5.7.1. Unstrengthened buildings can be expected to sustain damage that approximates five percent of their replacement cost.

C2.2.5.7.2. Personnel in buildings are provided a high degree of protection from death or serious injury; however, glass breakage and building debris may still cause some injuries.

C2.2.5.7.3. Personnel in the open are not expected to be injured seriously by blast effects. Fragments and debris may cause some injuries. The extent of injuries will depend upon the PES structure and the NEW and fragmentation characteristics of the AE involved.

C2.2.5.7.4. Control. Elimination of glass surfaces is the best control. If determined to be necessary, reducing the use of glass or the size of any glass surfaces and the use of blast-resistant glass will provide some relief. For new construction, building design characteristics should include consideration of how any required glass surfaces are oriented and use of blast-resistant glass to reduce glass breakage and structural damage.

C2.3. HD 1.2 EFFECTS

C2.3.1. Blast

C2.3.1.1. HD 1.2, when not stored with HD 1.1 or HD 1.5, is not expected to mass detonate. In an incident involving HD 1.2, when stored by itself or with HD 1.3, HD 1.4, or HD 1.6 (a HD 1.2 event), AE can be expected to both explode sporadically and burn. Fire will propagate through the mass of the AE over time. Some AE may neither explode nor burn. Blast effects from the incident are limited to the immediate vicinity and are not considered to be a significant hazard.

C2.3.1.2. An HD 1.2 event may occur over a prolonged period of time. Generally, the first reactions are relatively nonviolent and, typically, begin a few minutes after flames engulf the AE. Later reactions tend to be more violent. Reactions can continue for some time (hours), even after a fire is effectively out. Generally, smaller AE tends to react earlier in an incident than larger AE.

C2.3.1.3. The results of an accidental explosion in an underground facility will depend on the type and quantity of munitions, the type of explosion produced, and the layout of the facility. Hazards created outside the underground facility will likely not be as severe as those produced by HD 1.1 or 1.3 material.

C2.3.2. Fragments

C2.3.2.1. The primary hazard from a HD 1.2 event is fragmentation. Fragmentation may include primary fragments from AE casings or secondary fragments from containers and structures. At longer ranges, primary fragments are the major contributors to fragment hazards.

C2.3.2.2. During a HD 1.2 event, fragmentation may extensively damage exposed facilities. However, less fragmentation damage can be expected from a given quantity of HD 1.2

than would be expected from the corresponding quantity of HD 1.1 because not all the HD 1.2 will react.

C2.3.3. Thermal Hazards

C2.3.3.1. An incident involving a quantity of HD 1.2 poses considerably less thermal risk to personnel than an incident involving corresponding quantities of either HD 1.1 or HD 1.3 because a HD 1.2 event's progressive nature allows personnel to immediately evacuate the area.

C2.3.3.2. A HD 1.2 event's progressive nature provides an opportunity for a fire suppression system, if installed, to put out a fire in its early stages.

C2.3.4. Ejected Items. In HD 1.2 events, a reaction may eject (lob) unreacted-AE or AE components from the event site. These ejected items may subsequently react.

C2.3.5. Propelled Items. In HD 1.2 events, some AE or AE components may become propulsive and travel well beyond IBD.

C2.3.6. Firebrands. In an incident involving only HD 1.2 or HD 1.2 with HD 1.4, firebrands are considered to be a hazard only in the immediate vicinity of the incident site.

C2.3.7. Expected Consequences

C2.3.7.1. The expected consequences for HD 1.2 AE are similar to those for HD 1.1. The effects of HD 1.2 AE are NEW dependent.

C2.3.7.2. The principal hazard to personnel in the open, to aircraft, and to occupied vehicles is fragments.

C2.3.7.3. Airblast, fragment, and thermal hazards to buildings and parked aircraft or vehicles cannot be predicted reliably because the effects will depend on the MCE.

C2.4. HD 1.3 EFECTS

C2.4.1. Gas Pressures. In an incident involving only HD 1.3 or HD 1.3 with HD 1.4 (a HD 1.3 event):

C2.4.1.1. Where sufficient venting is provided, gas pressures generated by the event are not a significant concern. Examples of sites with sufficient venting include open storage and structures where internal pressures do not exceed 1-2 psi [6.9-13.8 kPa] (non-confinement structure).

C2.4.1.2. Where venting is insufficient, internal gas pressures may be substantial. In such situations, these pressures may blow out vent panels or frangible walls and, in some instances, cause partial or complete structural failure.

C2.4.1.3. Where there is minimal venting and structural containment (extreme confinement), a detonation of the HD 1.3 may occur with effects similar to those of a HD 1.1 explosion. For example, HD 1.3 AE is considered as HD 1.1 (mass explosion) for QD purposes when stored in underground chambers.

C2.4.2. Fragments. In an HD 1.3 event, fragments are considerably less hazardous than those produced by HD 1.1 and HD 1.2 events. Internal gas pressures may produce fragments from the bursting of containers or the rupture of containment facilities. In general, such fragments will be large and of low velocity. (For exceptions, see subparagraph C2.4.1.3.)

C2.4.3. Thermal Hazards. In an HD 1.3 event, heat flux presents the greatest hazard to personnel and assets. Energetic materials in HD 1.3 articles include both fuel components and oxidizers. Burning these materials emits fuel-rich flammable gases, fine particles, or both. This unburned material may ignite when it comes in contact with air and cause a large fireball. This fireball will expand radially from the ignition site and could wrap around obstacles, even those designed to provide line-of-sight protection from HD 1.1 events. Shields and walls can be designed to provide protection from thermal effects (see Chapter 4).

C2.4.3.1. The nominal spherical fireball that would be expected from the rapid burning of HD 1.3 can be calculated by $D_{FIRE} = 10 \times W_{EFF}^{1/3}$ where "D_{FIRE}" is the diameter of the fireball (ft) and "W_{EFF}" is the quantity of HD 1.3 involved (lb), multiplied by a 20 percent safety factor (e.g., "W" of 100 pounds = "W_{EFF}"of 120 pounds) [D_{FIRE} (meters) = 3.97 x W_{EFF} (kilograms) $^{1/3}$].

C2.4.3.2. In addition to the fireball itself, the thermal flux from the fireball can ignite fires out to Intermagazine Distance (IMD).

C2.4.4. Propelled Items. In an HD 1.3 event, some AE or AE components may become propulsive and travel well beyond IBD.

C2.4.5. Firebrands. In an HD 1.3 event, a severe fire-spread hazard may result from firebrands projected from the incident site. Firebrands can be expected to be thrown more than 50 ft [15.2 m] from a HD 1.3 event. Firebrands can ignite fires well beyond the distance to which a fireball poses a threat.

C2.4.6. Expected Consequences

C2.4.6.1. Exposed personnel may receive severe burns from fireballs or flash burning in an HD 1.3 event. The hazard distance is dependent on the quantity and burning rate of the HD 1.3 involved.

C2.4.6.2. Buildings, vehicles, and aircraft may be ignited by radiant heat, sparks, or firebrands or may be damaged by heat (searing, buckling, etc.).

C2.4.6.3. Personnel in nearby buildings, vehicles, or aircraft may be injured unless evacuated before heat conditions reach hazardous levels.

C2.5. HD 1.4 EFFECTS

C2.5.1. Blast. There is no blast associated with an incident involving only HD 1.4 (an HD 1.4 event).

C2.5.2. Fragmentation. An HD 1.4 event will not produce fragments of appreciable energy (i.e., greater than 14.8 ft-lbs [20 joules]). Fragments from HD 1.4S have energies less than or equal to 5.9 ft-lbs [8 joules].

C2.5.3. Thermal Hazard. AE given this designation are considered to provide only a moderate fire hazard. A fireball or jet of flame may extend 3 feet [1 m] beyond the location of the HD 1.4 event. A burning time of less than 330 seconds (5.5 minutes) for 220 lbs [100 kg] of the HD 1.4 AE is expected.

C2.5.4. Firebrands. No fiery projections are expected beyond 50 feet [15.2 m].

C2.5.5. Compatibility Group (CG) -S Items. HD 1.4 AE assigned a CG-S designation (see subparagraph C3.2.2.1.13.) is the most benign of all AE. In an HD 1.4 event that only involves CG-S, the expected blast, thermal, and projection effects will not significantly hinder fire fighting or other emergency responses.

C2.5.6. Expected Consequences. There may be minor consequences (projection, fire, smoke, heat, or loud noise) beyond the AE itself.

C2.6. HD 1.5 EFFECTS

HD 1.5 effects are similar to those produced by HD 1.1, without the fragmentation effects.

C2.7. HD 1.6 EFFECTS

HD 1.6 effects are similar to those produced by HD 1.3.

C3. CHAPTER 3
HAZARD CLASSIFICATION, STORAGE AND COMPATIBILITY PRINCIPLES, AND MIXING RULES

C3.1. HAZARD CLASSIFICATION

To ease identification of hazard characteristics for storage and transportation, the Department of Defense shall use:

C3.1.1. DoD Ammunition and Explosives Hazard Classification Procedures as a basis for assigning hazard classifications to all AE for both storage and transportation applications. (See Technical Bulletin (TB) 700-2, Naval Sea Systems Command Instruction (NAVSEAINST) 8020.8B, Technical Order (TO) 11A-1-47, Defense Logistics Agency Regulation (DLAR) 8220.1 (Reference (d)).

C3.1.2. The applicable Department of Transportation (DoT) hazardous materials regulations per 49 Code of Federal Regulations (CFR) parts 171 to 177 (Reference (e)).

C3.1.3. The United Nations' (UN) international system of classification developed for the transport of dangerous goods. See ST/SG/AC.10 (Reference (f)).

C3.2. DOD HAZARD CLASSIFICATION SYSTEM

C3.2.1. The DoD hazard classification system consists of nine hazard classes plus a non-regulated category that applies when explosives and hazardous materials are present in an item, but not to the degree that criteria for assignment to one of the nine classes are met. AE is assigned to the class that represents an item's predominant hazard characteristic. Class 1 applies to AE where the explosive hazard predominates. The six Class 1 divisions, and three division 1.2 subdivisions (subdivisions are only applicable for storage applications), which are outlined below, are used to indicate the character and predominance of explosive hazards. In addition to the classes, divisions, subdivisions, and the non-regulated category, thirteen Compatibility Groups (CG) are used for segregating AE on the basis of similarity of function, features, and accident effects potential. Furthermore, a parenthetical number is also used to indicate the minimum separation distance (in hundreds of feet) for protection from debris, fragments, and firebrands, when distance alone is relied on for such protection. This number is placed to the left of the hazard classification designators 1.1 through 1.3 (e.g., (18)1.1, (08)1.2.3, or (02)1.3). To simply express an item's hazard classification, this Standard uses the term "Hazard Division (HD)" to avoid repeatedly using the more cumbersome terminology "Subdivision X of Division Y of Class Z." The six Class 1 divisions and three hazard subdivisions are:

C3.2.1.1. Mass explosion (HD 1.1).

C3.2.1.2. Non-mass explosion, fragment producing (HD 1.2). (See paragraph C9.4.2.)

C3.2.1.2.1. HD 1.2.1. Those items with a NEWQD > 1.60 pounds [0.73 kg] or that exhibit fragmentation characteristics similar to or greater than (higher density, longer distance) M1 105 mm projectiles regardless of NEWQD.

C3.2.1.2.2. HD 1.2.2. Those items with an NEWQD ≤ 1.60 pounds [0.73 kg] or that at most exhibit fragmentation characteristics similar to high-explosive 40 mm ammunition regardless of NEWQD.

C3.2.1.2.3. HD 1.2.3. AE that exhibits at most an explosion reaction in the sympathetic reaction test, and no reaction more severe than burning in the liquid fuel/external fire test, bullet impact test, and slow heating test.

C3.2.1.3. Mass fire, minor blast or fragment (HD 1.3).

C3.2.1.4. Moderate fire, no significant blast or fragment (HD 1.4).

C3.2.1.5. Explosive substance, very insensitive (with mass explosion hazard) (HD 1.5).

C3.2.1.6. Explosive article, extremely insensitive (no mass explosion hazard) (HD 1.6).

C3.2.2. Storage and Transportation CG

C3.2.2.1. The thirteen CG assigned to AE based on similarity of function, features, and accident effects potential are:

C3.2.2.1.1. Group A. Initiating (primary) explosives. Bulk initiating explosives that have the necessary sensitivity to heat, friction, or percussion to make them suitable for use as initiating elements in an explosive train. Examples include the following: bulk lead azide, lead styphnate, mercury fulminate, tetracene, dry cyclotrimethylenetrinitramine (RDX) (also known as cyclonite, hexogen, or Royal Demolition Explosive), and dry pentaerythritol tetranitrate (PETN).

C3.2.2.1.2. Group B. Detonators and similar initiating devices not containing two or more effective protective features. Items containing initiating (primary) explosives that are designed to initiate or continue the functioning of an explosive train. Examples include the following: detonators, blasting caps, small arms primers, and fuzes.

C3.2.2.1.3. Group C. Bulk propellants, propelling charges, and devices containing propellant with, or without, its own means of ignition. Examples include the following: bulk single-, double-, or triple-base, and composite propellants, rocket motors (solid propellant), and propelled AE with inert projectiles.

C3.2.2.1.4. Group D. Bulk black powder; bulk HE (secondary explosives); and AE without a propelling charge, but containing HE (secondary explosives) without its own means of initiation, i.e., no initiating device is present or the device has two or more effective protective features. Examples include the following: bulk trinitrotoluene (TNT), Composition B, and black

powder; bulk wet RDX or PETN; bombs, projectiles, Cluster Bomb Units (CBU), depth charges, and torpedo warheads.

C3.2.2.1.5. Group E. AE containing HE (secondary explosives) without its own means of initiation and either containing, or with, a solid propelling charge. Examples include the following: artillery AE, rockets, and guided missiles.

C3.2.2.1.6. Group F. AE containing HE (secondary explosives) with its own means of initiation, i.e., the initiating device present has less than two effective protective features, and with or without a solid propelling charge. Examples include the following: grenades, sounding devices, and similar items having explosive trains with less than two effective protective features.

C3.2.2.1.7. Group G. Illuminating, incendiary, and smoke- (including hexachlorethane (HC)) or tear-producing AE, excluding those that are water-activated or that contain white phosphorus (WP) or a flammable liquid or gel. Examples include the following: flares, signals, and pyrotechnic substances.

C3.2.2.1.8. Group H. AE containing WP. AE in this group contains fillers that are spontaneously flammable when exposed to the atmosphere. Examples include the following: WP and plasticized white phosphorus (PWP).

C3.2.2.1.9. Group J. AE containing flammable liquids or gels other than those that are spontaneously flammable when exposed to water or the atmosphere. Examples include the following: liquid- or gel-filled incendiary AE, Fuel-Air Explosive (FAE) devices, and flammable liquid-fueled missiles and torpedoes.

C3.2.2.1.10. Group K. AE containing toxic chemical agents. AE in this group contain chemicals specifically designed for incapacitating effects more severe than lachrymation (tear-producing). Examples include the following: artillery or mortar AE (fuzed or unfuzed), grenades, rockets and bombs filled with a lethal or incapacitating chemical agent. (See note 4, Table C3.T1.)

C3.2.2.1.11. Group L. AE not included in other CG, having characteristics that present a special risk that does not permit storage with other types of AE, or other kinds of explosives, or dissimilar AE of this group. Examples include the following: water-activated devices, pyrophorics and phosphides and devices containing these substances, prepackaged hypergolic liquid-fueled rocket engines, triethyl aluminum (TEA), thickened TEA (TPA), and damaged or suspect AE of any group. Different types of AE in CGL presenting similar hazards may be stored together.

C3.2.2.1.12. Group N. AE containing only Extremely Insensitive Detonating Substances (EIDS). An example is HD 1.6 AE.

C3.2.2.1.13. Group S. AE that presents no significant hazard, packaged or designed so that any hazardous effects from accidental functioning are limited to the extent that they do

not significantly hinder firefighting. Examples include the following: explosive switches or valves and small arms ammunition.

C3.2.3. Sensitivity Groups (SG). For the purpose of storage within a HPM (see paragraph C3.3.7.) or where ARMCO, Inc. revetments (see paragraph C5.3.5.) or Substantial Dividing Walls (SDW) are utilized to reduce MCE, each HD 1.1 and HD 1.2 AE item is designated, based on its physical attributes, into one of five SG. Directed energy weapons are further identified by assigning the suffix "D" following the SG designation (e.g., SG2D). The SG assigned to an HD 1.1 and HD 1.2 AE item is found in the Joint Hazard Classification System (JHCS).

C3.2.3.1. The five SG, in relative order from least sensitive to most sensitive, are:

C3.2.3.1.1. SG 2: Non-robust or thin-skinned AE (see glossary).

C3.2.3.1.2. SG 1: Robust or thick-skinned AE. A SG 1 item meets any two of the following criteria:

C3.2.3.1.2.1. Ratio of explosive weight to empty case weight < 1.

C3.2.3.1.2.2. Minimum case thickness > 0.4 inches [1 cm].

C3.2.3.1.2.3. Ratio of case thickness to $NEWQD^{1/3}$ > 0.05 $in/lb^{1/3}$ [0.165 $cm/kg^{1/3}$].

C3.2.3.1.3. SG 3: Fragmenting AE. These items, which are typically air-to-air missiles, have warhead cases designed for specific fragmentation (e.g., pre-formed fragment warhead, scored cases, and continuous rod warheads).

C3.2.3.1.4. SG 4: Cluster bombs/dispenser munitions.

C3.2.3.1.5. SG 5: Other AE (items for which HPM non-propagation walls are not effective). Items are assigned to SG 5 because they are either very sensitive to propagation or their sensitivity has not been determined.

C3.2.3.2. Item-specific testing or analyses can be used to change an item's SG.

C3.3. STORAGE AND COMPATIBILITY PRINCIPLES

C3.3.1. Separate storage of AE by HD and type provides the highest degree of safety. Because such storage is generally not feasible, mixed storage—subject to compliance with these Standards—is normally implemented when such storage facilitates safe operation and promotes overall storage efficiency.

C3.3.2. The CG assigned to AE indicates what it can be stored with or without significantly increasing either an accident's probability or, for a given quantity, the magnitude of an accident's effects. Only compatible AE will be stored together.

C3.3.3. AE may not be stored with dissimilar substances or articles (e.g., flammable or combustible materials, acids, or corrosives) that may present additional hazards to the AE unless they have been assessed to be compatible. Non-Regulated AE and AE assigned to Classes 2 through 9 may have a CG assigned. When so assigned, the AE may be stored in an explosives magazine in accordance with the CG. The explosive weight of non-regulated AE and AE assigned to Classes 2 through 9 is not considered for QD purposes.

C3.3.4. The DoD hazard classification system classifies articles that contain riot control substances, without explosives components, and bulk toxic chemical agents as HD 6.1.

C3.3.5. AE in damaged packaging, in a suspect condition, or with characteristics that increase risk in storage, are not compatible with other AE and will be stored separately (in CG L).

C3.3.6. If different types of CG N munitions are mixed together and have not been tested to ensure non-propagation, the mixed munition types are individually considered to be HD 1.2.1 D or HD 1.2.2 D based on their NEWQD or overriding fragmentation characteristics.

C3.3.7. High Performance Magazine. Because of its construction (see paragraph C5.2.4.), each HPM storage cell is treated as a separate magazine for the purposes of meeting compatibility and mixing requirements. Within a HPM cell, all current compatibility and mixing regulations apply. The maximum allowable NEWQD is 30,000 lbs [13,608 kg] in a HPM cell and 60,000 lbs [27,215 kg] in the loading dock with the following restraints:

C3.3.7.1. When SG 1, 2, or 3 AE is present in a HPM cell, the allowable NEWQD in all cells (adjacent, across, and diagonal) and in the loading dock remains the maximum.

C3.3.7.2. When SG 4 AE is present in a HPM cell, the allowable NEWQD in each adjacent cell and in the cell directly across from it is reduced to 15,000 lbs [6,804 kg]. The allowable NEWQD in diagonal cells and in the loading dock remains the maximum.

C3.3.7.3. When SG 5 AE is present in a HPM, the NEWQD of all cells and the loading dock must be summed for quantity-distance purposes.

C3.3.7.4. When directed energy weapons are present in a HPM, they must be oriented in such a manner that if initiation were to occur, the consequences would be directed away from any other cell. Otherwise, the NEWQD of all cells and the loading dock must be summed for quantity-distance purposes.

C3.3.7.5. When HD and SG are mixed within a HPM cell, the most sensitive SG associated with the AE in that cell controls the allowable NEWQD in each adjacent cell. For

example, when HD 1.3, HD 1.4 and HD 1.6 items are stored with HD 1.1 or HD 1.2 items, the most sensitive SG of the HD 1.1 and HD 1.2 items controls the storage requirements.

C3.4. MIXED COMPATIBILITY GROUP STORAGE

C3.4.1. AE of different CG may only be mixed in storage as indicated in Table C3.T1. The exceptions are when Chapter 10 is being applied, and at specific continental United States (CONUS) locations that a DoD Component designates to store AE packaged and configured for rapid response (e.g., Rapid Deployment Force) for which the DDESB has approved the site plan. Such designated locations are authorized to mix CG, without complying with the compatibility and mixing requirements, as operationally required to achieve the optimum load needed by the intended receiving troops. The MCE allowable at any of these storage sites shall be limited to 8,818 lbs NEWQD [4,000 kg NEQ]. When computing QD requirements for such sites, Chapter 9 applies. However, the following AE will be excluded for NEWQD determination at such storage sites:

C3.4.1.1. Propelling charges in HD 1.2 fixed, semi-fixed, mortar, and rocket AE (see glossary).

C3.4.1.2. The NEWQD of HD 1.3 items, except at sites that contain only HD 1.3 items. At such sites, HD 1.3 QD applies. (NOTE: In the application of this paragraph to separate loading AE, the explosive weight of propelling charges is generally excluded when matched pairs of projectiles and propelling charges are at the site. However, if the quantity of propelling charges at the site exceeds the maximum usable for the quantity of projectiles at the site, the explosive weights of all propelling charges and projectiles at the site must be summed for NEWQD determination.)

Table C3.T1. Storage Compatibility Mixing Chart

CG	A	B	C	D	E	F	G	H	J	K	L	N	S
A	X	Z											
B	Z	X	Z	Z	Z	Z	Z					X	X
C		Z	X	X	X	Z	Z					X	X
D		Z	X	X	X	Z	Z					X	X
E		Z	X	X	X	Z	Z					X	X
F		Z	Z	Z	Z	X	Z					Z	X
G		Z	Z	Z	Z	Z	X					Z	X
H								X					X
J									X				X
K										Z			
L													
N		X	X	X	X	Z	Z					X	X
S		X	X	X	X	X	X	X	X			X	X

Notes for Table C3.T1.:

1 An "X" at an intersection indicates that the groups may be combined in storage. Otherwise, mixing is either prohibited or restricted per Note 2.

2 A "Z" at an intersection indicates that when warranted by operational considerations or magazine non-availability, and when safety is not sacrificed, mixed storage of limited quantities of some items from different groups may be approved by the DoD Components. Such approval documentation must be kept on site. Component approval of mixed storage in compliance with Z intersections does not require a waiver or exemption. Mixed storage of items within groups where no X or Z exists at that pair's intersection beyond the prohibitions and limitations of Note 7, however, requires an approved waiver or exemption. Examples of acceptable storage combinations are:

a. HD 1.1A initiating explosives with HD 1.1B fuzes not containing two or more effective protective features.

b. HD 1.3C bulk propellants or bagged propelling charges with HD 1.3G pyrotechnic substances.

3 Equal numbers of separately packaged components of hazard-classified complete rounds of any single type of AE may be stored together. When so stored, compatibility is that of the complete round.

4 CG K requires not only separate storage from other groups, but also may require separate storage within the group. The controlling DoD Component will determine which items under CG K may be stored together and those that must be stored separately. Such documentation must be kept on site.

5 AE classed outside Class 1 may be assigned the same CG as Class 1 AE containing similar hazard features, but where the explosive hazard predominates. Non-Class 1 AE and Class 1 AE assigned the same CG may be stored together.

6 The DoD Components may authorize AE-designated "Practice" or "Training" by nomenclature, regardless of the CG assigned, to be stored with the tactical AE it simulates. Such documentation must be kept on site.

7 The DoD Components may authorize the mixing of CG, except items in CG A, K and L, in limited quantities generally of 1,000 lb [454 kg] total NEWQD or less. Such documentation must be kept on site.

8 For purposes of mixing, all AE must be packaged in its standard storage and shipping container. AE containers will not be opened for issuing items from storage locations. Outer containers may be opened in storage locations for inventorying and for magazines storing only HD 1.4 items, unpacking, inspecting, and repackaging the HD 1.4 ammunition.

9 When using the "Z" mixing authorized by Note 2 for articles of either CG B or CG F, each will be segregated in storage from articles of other CG by means that prevent propagation of CG B or CG F articles to articles of other CG.

10 If dissimilar HD 1.6N AE are mixed together and have not been tested to ensure non-propagation, the mixed AE are individually considered to be HD 1.2.1 D or HD 1.2.2 D based on their NEWQD or overriding fragmentation characteristics for purposes of transportation and storage. When mixing CG N AE with CG B through CG G or with CG S, see subparagraphs C9.2.2.1.1., C9.2.2.4., C9.2.2.10., and C9.2.2.11. to determine the HD for the mixture.

C4. CHAPTER 4
PERSONNEL PROTECTION

C4.1. SCOPE AND APPLICATION

This chapter establishes blast, fragment, and thermal hazards protection principles. It applies to all operations and facilities within an Explosives Safety Quantity-Distance (ESQD) arc in which personnel are exposed to AE hazards. Technical Manual (TM)-5-1300, Naval Facilities Engineering Command (NAVFAC) P-397, Air Force Manual (AFM) 88-22 (Reference (g)) contains design procedures to achieve personnel protection, protect facilities and equipment, and prevent propagation of explosions.

C4.2. RISK ASSESSMENT

The responsible DoD Component shall perform a risk assessment on new or modified operations and facilities involving AE. Based upon such an assessment, engineering design criteria for facilities and operations shall be developed for use in the selection of equipment, shielding, engineering controls, and protective clothing for personnel.

C4.2.1. The risk assessment shall include:

C4.2.1.1. Initiation sensitivity.

C4.2.1.2. Quantity of materials.

C4.2.1.3. Heat output.

C4.2.1.4. Rate of burn.

C4.2.1.5. Potential ignition and initiation sources.

C4.2.1.6. Protection capabilities of shields, various types of clothing, and fire protection systems.

C4.2.1.7. Personnel exposure.

C4.2.2. New or modified facilities, located within the IBD arc of any PES, that will include glass panels and will contain personnel, shall have a glass breakage personnel hazards risk assessment conducted.

C4.3. PERMISSIBLE EXPOSURES

C4.3.1. Accidental Ignition or Initiation of Explosives.

C4.3.1.1. When a risk assessment indicates that there is an unacceptable risk from an accidental explosion or a flash fire, personnel shall be provided protection from blast, fragments, and thermal effects, to include respiratory and circulatory hazards.

C4.3.1.2. When required, personnel protection must limit incident blast overpressure to 2.3 psi [15.9 kPa], fragments to energies of less than 58 ft-lb [79 joules], and thermal fluxes to 0.3 calories per square centimeter per second [12.56 kilowatts per square meter].

C4.3.1.3. K24 [9.52] distance provides the required level of protection for blast and thermal effects only.

C4.3.1.4. Shields that comply with Military Standard (MIL-STD)-398 (Reference (h)) provide acceptable protection for blast, thermal and fragment effects.

C4.3.2. Intentional Ignition or Initiation of AE. At operations (e.g., function, proof, lot acceptance testing) where intentional ignition or initiation of AE are conducted and where shielding is required, as determined on a case-by-case basis by the DoD Component concerned, personnel protection shall:

C4.3.2.1. Meet the requirements of subparagraph C4.3.1.2.

C4.3.2.2. Limit overpressure levels in personnel-occupied areas to satisfy MIL-STD-1474D (Reference (i)).

C4.3.2.3. Contain or defeat all fragments.

C4.3.2.4. Limit thermal flux to: "Q" (calories/square centimeter/second) = $0.62t^{-0.7423}$ where "t" is the time in seconds that a person is exposed to the radiant heat. (Shields that comply with Reference (h) provide acceptable protection.)

C4.4. PROTECTIVE MEASURES

Personnel protection may be achieved by:

C4.4.1. Eliminating or establishing positive control of ignition and initiation stimuli.

C4.4.2. Using sufficient distance or barricades to protect from blast or fragments.

C4.4.3. Using fire detection and extinguishing systems (e.g., infra-red (IR) actuated deluge system) in those areas where exposed, thermally-energetic materials that have a high probability of ignition and a large thermal output are handled. Such systems shall maximize the speed of detection, have adequate capacity to extinguish potential flash fires in their incipient state, and maximize the speed of the application of the extinguishing agent.

C4.4.4. Using thermal shielding between the thermal source and personnel in AE operational areas, where it is essential for personnel to be present and the risk assessment indicates that an in-process thermal hazard exists. Any shielding used shall comply with Reference (h). When shielding is either not possible or inadequate, to include a failure to protect exposed personnel's respiratory and circulatory systems, augmentation with improved facility engineering design and personnel protective clothing and equipment may be necessary.

C4.4.5. Using thermal protective clothing that is capable of limiting bodily injury to first degree burns (0.3 calories per square centimeter per second [12.56 kilowatts/m^2]) with personnel taking turning-evasive action, when the maximum quantity of combustible material used in the operation is ignited.

C4.4.6. Using protective clothing capable of providing respiratory protection from the inhalation of hot vapors or any toxicological effects, when the risk assessment indicates adverse effects would be encountered from the inhalation of combustion products.

C4.4.7. Minimizing the number and size of glass panels in an ES and, if possible, orienting the ES to minimize blast loads on glass panels, when a risk assessment (see section C4.2.) indicates that a glass hazard is present.

C4.4.7.1. When use of window panels is determined to be necessary and a risk assessment determines that there will be an associated glass hazard, blast-resistant windows of sufficient strength, as determined by an engineering analysis, shall be used for:

C4.4.7.1.1. Existing ES, upon major modification or modified operations.

C4.4.7.1.2. New construction. (The use of glass panels in new construction should be avoided.)

C4.4.7.2. The framing and sash of such panels shall be of sufficient strength to retain the panel in the structure for the expected blast loads from an explosion at any PES.

C5. CHAPTER 5
CONSTRUCTION CRITERIA PERMITTING REDUCED SEPARATION DISTANCES

C5.1. GENERAL

C5.1.1. This chapter contains DoD standards for construction of ECM, barricades, barricaded open storage modules, special structures, ARMCO, Inc. revetments, and underground storage facilities. Facilities constructed per this chapter:

C5.1.1.1. Are permitted to use reduced separation distance criteria.

C5.1.1.2. Must meet the criteria of Chapters 6 and 7.

C5.1.2. Construction features and location are important safety considerations in planning facilities. The effects of potential explosions may be altered significantly by construction features that limit the amount of explosives involved, attenuate blast overpressure or thermal radiation, and reduce the quantity and range of hazardous fragments and debris. (NOTE: Proper location of ES in relation to PES helps minimize unacceptable damage and injuries in the event of an incident.) The major objectives in facility planning shall be to:

C5.1.2.1. Protect against explosion propagation between adjacent bays or buildings and protect personnel against death or serious injury from incidents in adjacent bays or buildings. The construction of separate buildings to limit explosion propagation, rather than the use of either protective construction or separation of explosives within a single building should be considered when safety would be greatly enhanced or cost would be significantly reduced.

C5.1.2.2. Protect assets, when warranted.

C5.1.3. Hardening an ES or constructing a PES to suppress explosion effects to provide an appropriate degree of protection may allow a reduction of the separation distances required by QD tables. The rationale and supporting data that justify any such QD reduction shall be submitted to the DDESB with the site and general construction plans for approval (see section C5.4.).

C5.1.4. New construction of previously DDESB-approved 7-Bar and 3-Bar ECM must meet the minimum requirements of the current revisions of the approved drawings.

C5.2. AE STORAGE FACILITIES

C5.2.1. ECM. An ECM's primary purpose is to protect AE. To qualify for the default IMD in Table C9.T6., an ECM, acting as an ES, must not collapse. Although substantial permanent deformation of the ECM may occur, sufficient space should be provided to prevent the deformed structure or its doors from striking the contents.

C5.2.1.1. ECM may be approved for storage of up to 500,000 lbs NEW [226,795 kg NEQ] of HD 1.1 in accordance with Table C9.T5. DDESB Technical Paper (TP) No. 15, (Reference (j)) provides listings of the various types of ECM that have been constructed. These magazines are identified by their structural strength designator (i.e. 7-Bar, 3-Bar, or Undefined). Table AP1-1. of Reference (j) lists the 7-Bar and 3-Bar ECM designs that are currently approved for new construction.

C5.2.1.1.1. If an ECM's drawing number(s) are not listed in Reference (j), it shall be treated as an "Undefined" ECM, until a structural analysis is performed to show that the ECM qualifies for another structural strength designation, or support documentation is provided to prove the ECM had been approved by the DDESB with a different structural strength designation.

C5.2.1.1.2. For existing, arch-shaped Undefined ECM, U. S. Army Corps of Engineers (CoE) Report HNDED-CS-S-95-01 (Reference (k)) may be used to determine if an Undefined ECM could qualify as a 7-Bar or a 3-Bar ECM.

C5.2.1.1.3. DDESB approval is required prior to any change in an ECM's structural strength designator.

C5.2.1.1.4. Certain ECM, aboveground storage magazines, and containers have been approved with reduced NEW and/or reduced QD and these are listed in Table AP1-4. of Reference (j). Use of these structures/containers requires that their use and siting meet all conditions AND restrictions specified in the design and approval documentation, as described in Reference (j).

C5.2.1.2. ECM must be designed to withstand the following:

C5.2.1.2.1. Conventional (e.g., live, dead, snow) loads for the barrel of an arch-shaped ECM.

C5.2.1.2.2. Conventional (e.g., live, dead, snow) and blast-induced loads for the roof of a flat-roofed ECM.

C5.2.1.2.3. Conventional (e.g., live, dead, snow) loads for the rear wall of an arch-shaped ECM and for the rear and side walls of a flat-roofed ECM.

C5.2.1.2.4. Expected blast loads, as applicable:

C5.2.1.2.4.1. On the head wall and door of 3-Bar ES ECM is a triangular pulse with peak overpressure of 43.5 psi [3 bars, 300 kPa] and impulse of $11.3W^{1/3}$ psi-ms [$100Q^{1/3}$ Pa-s].

C5.2.1.2.4.2. On the head wall and door of 7-Bar ES ECM is a triangular pulse with peak overpressure of 101.5 psi [7 bars, 700 kPa] and impulse of $13.9W^{1/3}$ psi-ms [$123Q^{1/3}$ Pa-s].

C5.2.1.2.4.3. On the roof of a flat-roofed Undefined, 3-Bar, or 7-Bar ES ECM is a triangular pulse with peak overpressure of 108 psi [7.5 bars, 745 kPa] and impulse of $19W^{1/3}$ psi-ms [$170Q^{1/3}$ Pa-s].

C5.2.1.3. Earth cover for ECM.

C5.2.1.3.1. Earth cover shall be reasonably cohesive and free from harmful (toxic) matter, trash, debris, and stones heavier than ten pounds [4.54 kg] or larger than six inches [152 mm] in diameter. Solid or wet clay or similar types of soil shall not be used as earth cover because it is too cohesive. The larger of acceptable stones shall be limited to the lower center of fills and shall not be used for earth cover over magazines. The earthen material shall be compacted and prepared, as necessary, for structural integrity and erosion control. If it is impossible to use a cohesive material (e.g., in sandy soil), the earth cover over ECM shall be finished with a suitable material (e.g., geotextiles, gunnite) that will ensure structural integrity.

C5.2.1.3.2. The earth fill or earth cover between ECM may be either solid or sloped. A minimum of 2 ft [0.61 m] of earth cover shall be maintained over the top of each ECM. If the specified thickness and slope of earth on the ECM is not maintained, the ECM shall be sited as an AGM.

C5.2.2. Barricaded Open Storage Modules

C5.2.2.1. As depicted in Figure C5.F1., a module is a barricaded area composed of a series of connected cells with hard surface (e.g., concrete, packed earth, engineered materials, etc.) storage pads separated from each other by barricades. Although a light metal shed or other lightweight fire retardant cover may be used for weather protection for individual cells, heavy structures (e.g., reinforced concrete, dense masonry units), or flammable material shall not be used.

C5.2.2.2. The maximum NEW [NEQ] permitted to be stored within each cell is 250,000 lbs [113,398 kg].

C5.2.2.3. Module storage is considered a temporary expedient and may be used as the DoD Component concerned determines necessary. However, from an explosives safety and reliability standpoint, priority shall be given to the use of ECM for items requiring protection from the elements, long-term storage, or high security protection.

C5.2.2.4. Storage shall be limited to AE that will not promptly propagate explosions or mass fire between modules, and that are not susceptible to firebrands and fireballs. These restrictions allow storage at K1.1 [0.44] separation.

C5.2.2.4.1. Only the following AE are approved for modular storage:

C5.2.2.4.1.1. Robust HD 1.1 AE (e.g., HE bombs, fuzed or unfuzed, with or without fins) when stored on nonflammable pallets.

C5.2.2.4.1.2. The below items when contained in nonflammable shipping containers:

C5.2.2.4.1.2.1. 30 mm and smaller AE.

C5.2.2.4.1.2.2. CBU.

C5.2.2.4.1.2.3. Inert AE components.

C5.2.2.4.1.2.4. HD 1.4 AE.

C5.2.2.4.2. Module storage of AE items in flammable outer-packaging configurations shall be minimized. AE items in flammable outer-packaging configurations must be covered with fire retardant material. Combustible dunnage or other flammable material shall not be stored either in, or within, 100 ft [30.5 m] of modules.

C5.2.2.4.3. When fire retardant materials are used to cover AE items stored in modules, ventilation shall be provided between the covers and the stored AE items to minimize the effects of solar heating upon the stored AE.

C5.2.2.4.4. AE stored in each module shall normally be limited to one type of item, unless the DoD Component concerned authorizes mixed storage.

C5.2.2.5. Barricade Requirements:

C5.2.2.5.1. All barricades used in forming the module shall meet the requirements in section C5.3. The width or length of the stack of AE (controlled by the pad size of the cell) and the distances between the stack and the top of the barricade influences the minimum barricade height requirement. The heights listed in Table C5.T1. are the minimum requirements for barricade locations. These minimum heights are based upon both the storage pad sizes and the separations shown. When feasible, barricade heights should be increased (see subparagraph C5.3.2.3.).

C5.2.2.5.2. The centerlines of barricades between cells of the module shall be located at a point halfway between adjacent AE storage pads. Back and end (outside) barricades shall be located at the same distance from the pads as those between the cells.

C5.2.2.5.3. When selecting a site for a module, maximum advantage should be taken of natural topographical barriers. When used, natural barriers shall provide the same level of protection as the barricade shown in Figure C5.F1.

C5.2.2.6. Table C5.T1. provides the minimum pad sizes necessary to store the NEWQD indicated. The pad's size may need to be adjusted to accommodate specific AE. This adjustment will impact the required barricade height (see Note 2 of Table C5.T1.).

C5.2.2.7. The only restriction on the arrangement of cells within a module and of groups of modules is that cell openings may not face each other, unless they are either barricaded or meet QD criteria for an unbarricaded AGM (see Table C9.T6.).

C5.2.3. Underground Storage Facilities

C5.2.3.1. General Design Considerations

C5.2.3.1.1. Underground storage facilities may consist of a single chamber or a series of connected chambers and other protective construction features. The chambers may be either excavated or natural geological cavities. Figure C5.F2. shows the layout of several typical underground facilities. To qualify as an underground facility, the minimum distance from the perimeter of a storage area to an exterior surface shall be greater than 0.25 $W^{1/3}$ [0.10 $Q^{1/3}$]. This minimum distance normally, but not always, equals the thickness of the earth cover. If this criterion cannot be met, the facility must be sited as an AGM.

C5.2.3.1.2. Design of new underground storage facilities must take into account site conditions, storage requirements, and operational needs. Once these are established, a design may be developed based on the CoE definitive drawing, DEF 421-80-04, discussed in Chapter 5 of Reference (j). Special features (e.g., debris traps, expansion chambers, closure blocks, portal barricades, and constrictions) may be incorporated in the design of underground storage facilities to reduce the IBD for both debris and airblast. The specifications for these special features are also given in CoE definitive drawing, DEF 421-80-04, and their effects are discussed below.

Figure C5.F1. Typical Eight-Cell Open Storage Module (see paragraph C5.2.2.)

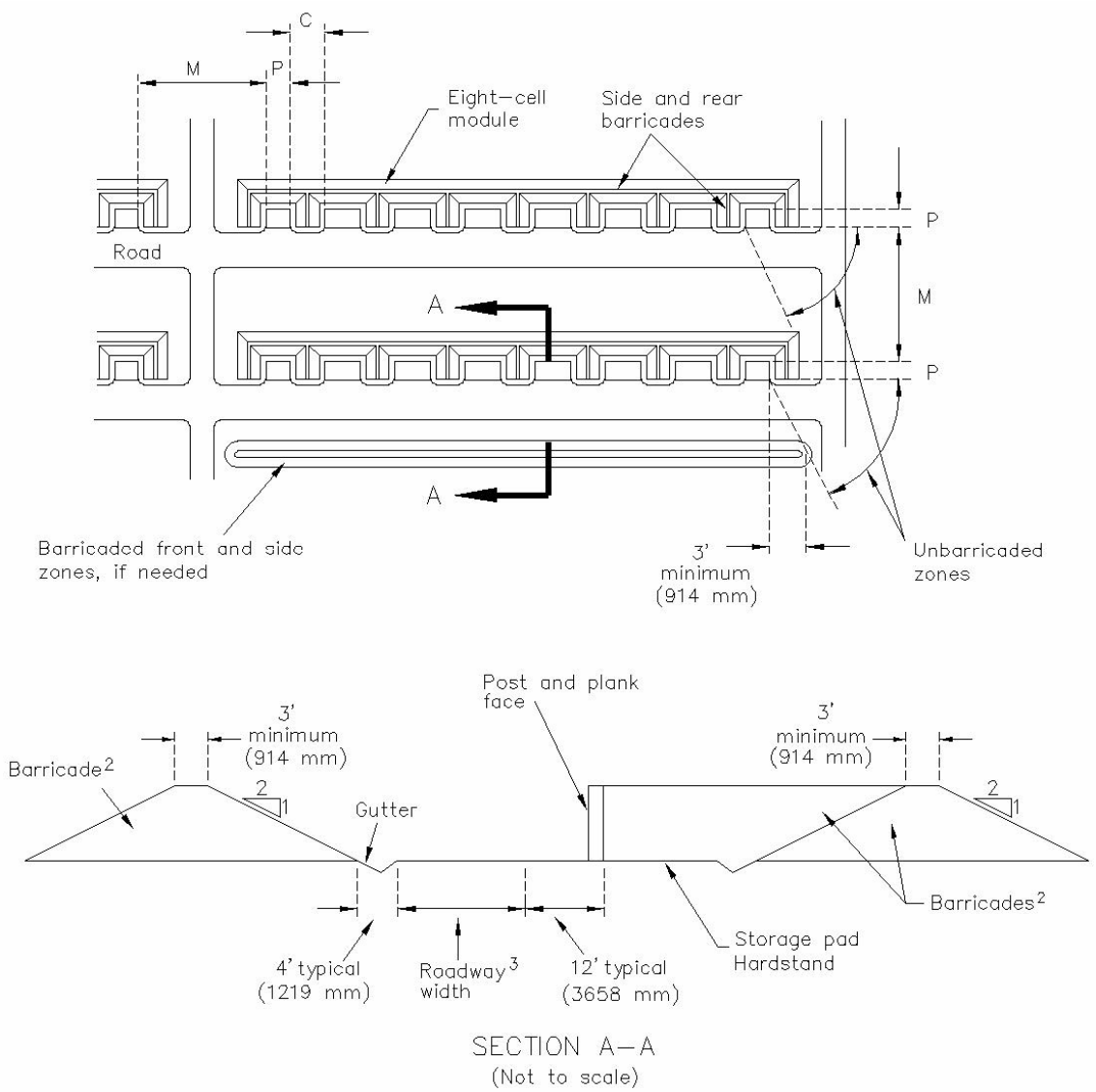

Notes for Figure C5.F1.:

1. Number of cells, cells' NEWQD, pad sizes (P), distances between cells (C) and modules (M), and minimum barricade heights can vary (see Table C5.T1.).
2. Refer to section C5.3. for barricade design criteria and for alternate barricade designs.
3. Roadway width determined by the DoD Components.

Table C5.T1. HD 1.1 IMD for Barricaded Open Storage Module

NEWQD (lbs) *[kg]*	**Minimum Pad-to-Pad Separation Distance ("C" and "M" in C5.F1)[1,2]** (ft) *[m]*	**Maximum Pad Dimension ("P" in C5.F1) Width or Depth** (ft) *[m]*	**Minimum Height Above Top of Stack[3]** (ft) *[m]*
50,000	41	30	2
22,680	*12.5*	*9.1*	*0.6*
70,000	45	30	2
31,751	*13.9*	*9.1*	*0.6*
100,000	51	30	2
45,359	*15.7*	*9.1*	*0.6*
150,000	58	30	2
68,039	*18.0*	*9.1*	*0.6*
200,000	64	30	2
90,718	*19.8*	*9.1*	*0.6*
200,000	64	40	2.5
90,718	*19.8*	*12.2*	*0.8*
250,000	69	40	2.5
113,398	*21.3*	*12.2*	*0.8*
250,000	69	50	3
113,398	*21.3*	*15.2*	*0.9*

Notes for Table C5.T1.:

1. $D = 1.1W^{1/3}$ [English EQN C5.T1-1]
   D in ft and W in lbs
   $D = 0.44Q^{1/3}$ [Metric EQN C5.T1-2]
   D in m and Q in kg
   $W = D^3/1.33$ [English EQN C5.T1-3]
   W in lb and D in ft
   $Q = D^3/0.083$ [Metric EQN C5.T1-4]
   Q in kg and D in m
2. AE shall not be stored beyond the boundaries of the storage pad.
3. Barricade height is based upon storage pad size. When "P" exceeds 50 ft [15.2 m], then the barricade height shall be increased by 6 inches [152 mm] for each 10 ft [3.05 m] increase of "P."

Figure C5.F2. Typical Underground Storage Facilities (see paragraph C5.2.3.)

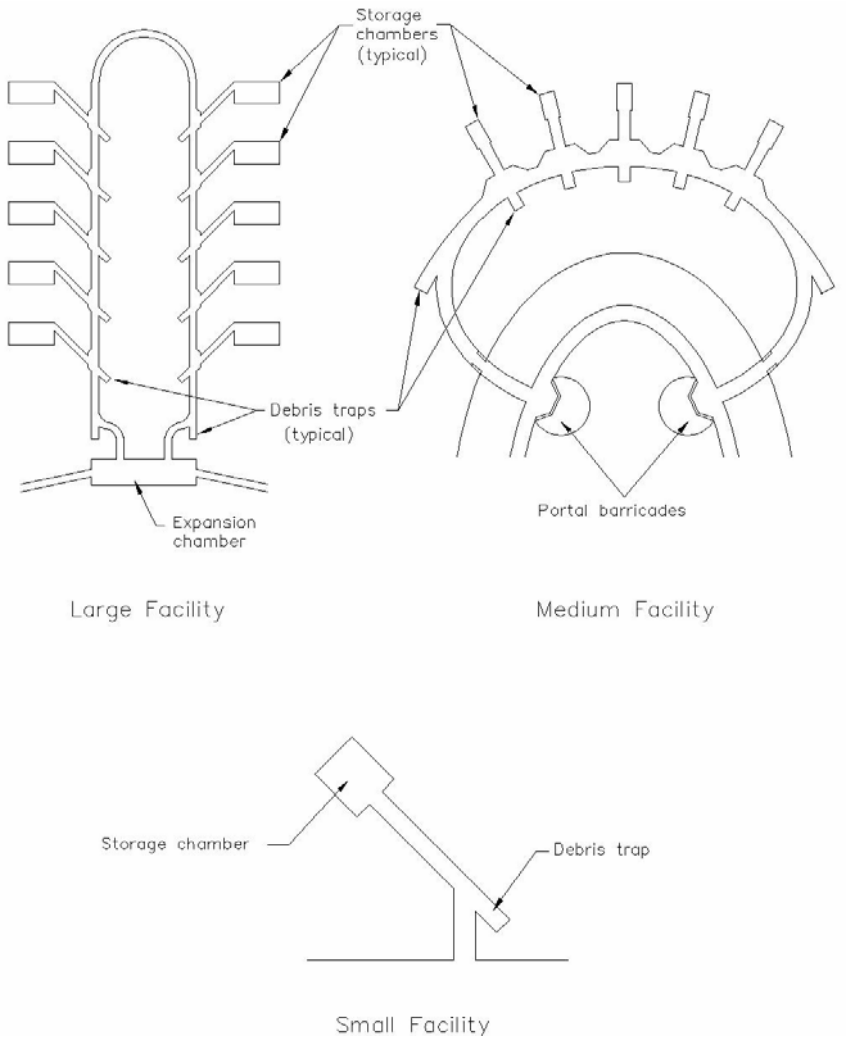

C5.2.3.2. Special Design Considerations

C5.2.3.2.1. Debris Mitigation. Debris IBD may be reduced through the use of debris traps, expansion chambers, high pressure closures, and portal barricades.

C5.2.3.2.1.1. Debris traps are pockets excavated in the rock at or beyond the end of sections of tunnel that are designed to catch debris from a storage chamber detonation. Debris traps should be at least 20 percent wider and 10 percent taller than the tunnel leading to the trap, with a depth (measured along the shortest wall) of at least one tunnel diameter.

C5.2.3.2.1.2. Expansion chambers are very effective in entrapping debris, as long as the tunnels entering and exiting the chambers are either offset in axial alignment by at least two tunnel widths, or enter and exit the chambers in directions that differ by at least 45 degrees.

C5.2.3.2.1.3. To be effective, debris traps and expansion chambers that are intended to entrap debris must be designed to contain the full potential volume of debris, based on the maximum capacity of the largest storage chamber.

C5.2.3.2.1.4. Portal barricades provide a means of reducing IBD from debris by obstructing the path of the debris as it exits the tunnel.

C5.2.3.2.1.5. High-pressure closures are large blocks constructed of concrete or other materials that can obstruct or greatly reduce the flow of blast effects and debris from an explosion from or into a storage chamber. For chamber loading density (w) of about 0.625 lb/ft^3 [10 kg/m^3] or above, closure blocks will contain 40 percent or more of the explosion debris within the detonation chamber, provided that the block is designed to remain intact. If a closure block fails under the blast load, it will produce a volume of debris in addition to that from the chamber itself. However, because the block's mass and inertia are sufficient to greatly reduce the velocity of the primary debris, the effectiveness of other debris-mitigating features (e.g., debris traps, expansion chambers, and barricades) is increased.

C5.2.3.2.1.6. Use of barricades with any other of these features will lower the debris hazard to a level where QD considerations for debris is not required.

C5.2.3.3. Airblast Mitigation. Special features that may be used in underground storage facilities to reduce airblast IBD include:

C5.2.3.3.1. Facility Layouts. A facility's layout and its volume control the external airblast effects.

C5.2.3.3.1.1. In a single-chamber facility with a straight access tunnel leading from the chamber to the portal, which is commonly called a "shotgun" magazine, the blast and debris are channeled to the external area as if fired from a long-barreled gun. In this type of facility design, airblast mitigation, given a fixed NEWQD, can be provided by increased chamber and tunnel dimensions.

C5.2.3.3.1.2. In more complex facility layouts, reflections of the explosive shock against the various tunnel walls may reduce the exit pressures. The cumulative effects of these reflections may reduce the overpressure at the shock front to that of the expanding gas pressure. In addition, the detonation gas pressure decreases as the volume it occupies increases. Therefore, larger, more complex facilities will produce greater reductions in the effective overpressure at the opening, which will reduce the IBD.

C5.2.3.3.1.3. In a more complex facility with two or more openings, the IBD will be reduced by about 10 percent.

C5.2.3.3.2. Expansion-Chambers. Expansion-chambers provide additional volume for the expansion of the detonation gasses behind the shock front as it enters the chamber from a connecting tunnel. Some additional reduction of the peak pressure at the shock front occurs as the front expands into the expansion-chamber and reflects from the walls. Although expansion-

chambers may be used as loading areas or as turn-around areas for transport vehicles servicing facilities through a single entry passage, they shall not be used for storage.

C5.2.3.3.3. Constrictions. Constrictions are short lengths of tunnel whose cross-sectional areas are reduced to one-half or less of the normal tunnel cross-section. Constrictions reduce the airblast effects passing through them. To be effective, constrictions should be placed within five tunnel diameters of the tunnel exit or to the entrances of storage chambers. As an added benefit, constrictions at chamber entrances also reduce the total loading on blast doors that may be installed to protect a chamber's contents.

C5.2.3.3.4. Portal Barricades. A barricade in front of the portal (entrance into tunnel) will reflect that portion of the shock wave moving directly outward from the portal, thereby reducing the pressures along the extended tunnel axis and increasing the pressures in the opposite direction. The result is a more circular IBD area centered at the portal. A portal barricade meeting the construction criteria of the CoE definitive drawing discussed in subparagraph C5.2.3.1.2. will reduce the IBD along the extended tunnel axis by 50 percent. The total IBD area is only slightly reduced, but will change to a circular area, half of which is behind the portal.

C5.2.3.3.5. High-Pressure Closures. High-Pressure Closures are large blocks constructed of concrete or other materials that obstruct or greatly reduce the flow of blast effects and debris from an explosion from or into a storage chamber.

C5.2.3.3.5.1. When used to reduce QD, by restricting the blast outflow from a chamber, the block must be designed to be rapidly driven from an open to a closed position by the detonation pressures in the chamber. While this type of block will provide some protection of chamber contents from an explosion in another chamber, blast doors must also be used to provide complete protection. Tests have shown that a closure block, with sufficient mass, can obstruct the initial outflow of airblast from an explosion in a chamber to reduce pressures in the connecting tunnels by a factor of two or more, even when the block is destroyed. Blocks with sufficient strength to remain structurally intact can provide greater reductions. Because many variables influence the performance of a closing device, their design details must be developed on a site-specific basis.

C5.2.3.3.5.1.1. For loading densities (w) of 0.625 lb/ft^3 [10 kg/m^3] or higher, a 50 percent reduction in IBD may be applied to the use of a high pressure closure block provided it is designed to remain intact in the event of an explosion.

C5.2.3.3.5.1.2. For lower loading densities, use the following reductions:

C5.2.3.3.5.1.2.1. $0.0625 < w < 0.625$ lb/ft^3 [$1.0 < w < 10$ kg/m^3], reductions may be calculated by:

$$y(\%) = 50\log_{10}(16.02w) \qquad \text{[English EQN C5.2-1]}$$

$$[y(\%) = 50\log_{10}(1.0w)] \qquad \text{[Metric EQN C5.2-2]}$$

where y is the percent reduction in IBD, and w is loading density in lb/ft^3 [kg/m^3]

C5.2.3.3.5.1.2.2. For $w < 0.0625$ lb/ft^3 [$w < 1$ kg/m^3]:

$y(\%) = 0.$

C5.2.3.3.6. When used to protect the contents of a chamber from an explosion in another chamber, the block must be designed to move from a normally closed position to an open position when entry is required. Blast doors are not required for this type of closure block.

C5.2.3.4. Chamber Separation Requirements. Minimum storage chamber separation distances are required to prevent or control the communication of explosions or fires between chambers. There are three modes by which an explosion or fire can be communicated: rock spall, propagation through cracks or fissures, and airblast or thermal effects traveling through connecting passages. Spalled rock of sufficient mass that is traveling at a sufficient velocity may damage or sympathetically detonate impacted AE in the acceptor chambers.

C5.2.3.4.1. Prevention of Damage by Rock Spall (HD 1.1 and HD 1.3). The chamber separation distance is the shortest distance (rock thickness) between two chambers. When an explosion occurs in a donor chamber (a PES), a shock wave is transmitted through the surrounding rock. The intensity of the shock decreases with distance. For small chamber separation distances, the shock may be strong enough to produce spalling of the rock walls of adjacent ES chambers. When no specific protective construction is used:

C5.2.3.4.1.1. For moderate to strong rock, with loading densities less than or equal to 3.0 lb/ft^3 [48.1 kg/m^3], the minimum chamber separation distance (D_{cd}) required to prevent hazardous spall effects is:

$D_{cd} = 2.5W^{1/3}$ [English EQN C5.2-3]

$[D_{cd} = .99Q^{1/3}]$ [Metric EQN C5.2-4]

where D_{cd} is in ft and W is in lbs [D_{cd} is in m, and Q is in kg]. (NOTE: D_{cd} shall not be less than 15 ft [4.6 m].)

C5.2.3.4.1.1.1. For loading densities greater than 3.0 lbs/ft^3 [48kg/m^3], the separation distance is:

$D_{cd} = 5.0W^{1/3}$ [English EQN C5.2-5]

$[D_{cd} = 1.98Q^{1/3}]$ [Metric EQN C5.2-6]

C5.2.3.4.1.2. For weak rock, at all loading densities, the separation distance is:

$D_{cd} = 3.5W^{1/3}$ [English EQN C5.2-7]

$[D_{cd} = 1.39Q^{1/3}]$ [Metric EQN C5.2-8]

C5.2.3.4.1.3. The equations above are the basis for values of D_{cd} listed in Table C5.T2.).

C5.2.3.5. Prevention of Propagation by Rock Spall (HD 1.1 and HD 1.3). Because rock spall is considered an immediate mode of propagation, time separations between donor and acceptor explosions may not be sufficient to prevent coalescence of blast waves. If damage to AE stored in adjacent chambers is acceptable, chamber separation distances from those determined to prevent damage (see subparagraph C5.2.3.2.1.) can be reduced to prevent

propagation by rock spall. To prevent propagation, the separation distances between donor and acceptor chambers are calculated using the below equations. If the required separation distances defined below cannot be met, explosives weights in all chambers must be added together to determine W, unless analyses or experiments demonstrate otherwise.

C5.2.3.5.1. When no special protective construction is used, the separation distance (D_{cp}) to prevent propagation by rock spall is:

$D_{cp} = 1.5W^{1/3}$ [English EQN C5.2-9]

[$D_{cp} = 0.59Q^{1/3}$] [Metric EQN C5.2-10]

where D_{cp} is in ft and W is in lbs. [D_{cp} is in m and Q is in kg]

C5.2.3.5.2. When the acceptor chamber has protective construction to prevent spall and collapse, the D_{cp} to prevent propagation by impact of rock spall is:

$D_{cp} = 0.75W^{1/3}$ [English EQN C5.2-11]

[$D_{cp} = 0.30Q^{1/3}$] [Metric EQN C5.2-12]

where D_{cp} is in ft and W is in lbs. [D_{cp} is in m and Q in kg]

C5.2.3.5.3. Separation distances, D_{cp} and D_{cd}, are listed in Table C5.T2. These distances are based on an explosive loading density of 17 lb/ft^3 [272.3 kg/m^3] and will likely be safety conservative for lower loading densities.

C5.2.3.6. Prevention of Propagation Through Cracks and Fissures (HD 1.1 and HD 1.3). Propagation between a donor and an acceptor chamber has been observed to occur when natural, near-horizontal jointing planes, cracks, or fissures in the rock between the chambers are opened by the lifting force of the detonation pressure. Prior to construction of a multi-chamber magazine, a careful site investigation must be made to ensure that such joints or fissures do not extend from one chamber location to an adjacent one. Should such defects be encountered during facility excavation, a reevaluation of the intended siting is required.

C5.2.3.7. Prevention of Propagation through Passageways (HD 1.1 and HD 1.3). Flame and hot gas may provide a delayed mode of propagation. Time separations between the events in the donor chamber and the acceptor chamber by this mode will likely be sufficient to prevent coalescence of blast waves. Consequently, siting is based on each chamber's NEWQD. To protect assets, blast and fire resistant doors may be installed within multi-chambered facilities. Evaluations for required chamber separations due to this propagation mode should be made on a site-specific basis using procedures outlined in CoE definitive drawing DEF 421-80-04. For HD 1.1 and HD 1.3 materials:

C5.2.3.7.1. Chamber entrances at the ground surface, or entrances to branch tunnels off the same side of a main passageway, shall be separated by at least 15 ft [4.6 m].

C5.2.3.7.2. Entrances to branch tunnels off opposite sides of a main passageway shall be separated by at least twice the width of the main passageway.

C5.2.3.8. Chamber Cover Thickness. The chamber cover thickness is the shortest distance between the ground surface and the natural rock surface at the chamber's ceiling or, in

some cases, a chamber's wall. For all types of rock, the critical cover thickness required to prevent breaching of the chamber cover by a detonation (C_c) is

$Cc = 2.5W^{1/3}$ [English EQN C5.2-13]

$[Cc = .99Q^{1/3}]$ [Metric EQN C5.2-14]

where C_c is in ft and W is in lbs [C_c is in m and Q is in kg].

Table C5.T2. Chamber Separation Distances Required to Prevent Damage and Propagation by Rock Spall

NEWQD	Chamber Separation to Prevent Damage by Rock Spall, D_{cd}			Chamber Separation to Prevent Propagation by Rock Spall, D_{cp}	
	Moderate-to-strong rock		Weak rock (all loading densities)	No protective construction	With protective construction
	$w \leq 3$ lbs/ft^3	$w > 3$ lbs/ft^3			
	$w \leq 48.1$ kg/m^3	*$w > 48.1$ kg/m^3*			
	(See note 1)	(See note 2)	(See note 3)	(See note 4)	(See note 5)
(lbs)	(ft)	(ft)	(ft)	(ft)	(ft)
[kg]	*[m]*	*[m]*	*[m]*	*[m]*	*[m]*
1,000	25	50	35	15.0	7.5
454	*7.6*	*15.2*	*10.7*	*4.6*	*2.3*
2,000	31	63	44	18.9	9.4
907	*9.6*	*19.2*	*13.5*	*5.8*	*2.9*
3,000	36	72	50	22	10.8
1,361	*11.0*	*21.9*	*15.4*	*6.6*	*3.3*
4,000	40	79	56	24	11.9
1,814	*12.1*	*24.1*	*17.0*	*7.3*	*3.7*
5,000	43	85	60	26	12.8
2,268	*13.0*	*26.0*	*18.3*	*7.9*	*3.9*
7,000	48	96	67	29	14.3
3,175	*14.6*	*29.1*	*20.4*	*8.8*	*4.4*
10,000	54	108	75	32	16.2
4,536	*16.4*	*32.8*	*23.0*	*9.9*	*5.0*
20,000	68	136	95	41	20.4
9,072	*20.6*	*41.3*	*29.0*	*12.5*	*6.3*
30,000	78	155	109	47	23.3
13,608	*23.6*	*47.3*	*33.2*	*14.3*	*7.2*
50,000	92	184	129	55	27.6
22,680	*28.0*	*56.0*	*39.3*	*17.0*	*8.5*
70,000	103	206	144	62	30.9
31,751	*31.3*	*62.7*	*44.0*	*19.0*	*9.5*
100,000	116	232	162	70	34.8
45,359	*35.3*	*70.6*	*49.6*	*21.4*	*10.7*
200,000	146	292	205	88	43.9
90,718	*44.5*	*89.0*	*62.5*	*27.0*	*13.5*
300,000	167	335	234	100	50.2
136,077	*50.9*	*101.8*	*71.5*	*30.9*	*15.4*
500,000	198	397	278	119	59.5
226,795	*60.4*	*120.7*	*84.8*	*36.6*	*18.3*
700,000	222	444	311	133	66.6
317,513	*67.5*	*135.1*	*94.8*	*40.9*	*20.5*
1,000,000	250	500	350	150	75.0
453,590	*76.1*	*152.1*	*106.8*	*46.1*	*23.1*

Notes for Table C5.T2.:

1. $D_{cd} = 2.5W^{1/3}$ [English EQN C5.T2-1]

	W in lbs, D_{cd} in ft with a minimum distance of 15 ft	
	$D_{cd} = 0.99Q^{1/3}$	[Metric EQN C5.T2-2]
	Q in kg, D_{cd} in m with a minimum distance of 4.57 m	
	W=Dcd3/15.625	[English EQN C5.T2-3]
	D_{cd} in ft, W in lbs, with a minimum W of 216 lb	
	$Q = D_{cd}^3/0.97$	[Metric EQN C5.T2-4]
	D_{cd} in m, Q in kg, with a minimum Q of 98.3 kg	
2.	$D_{cd} = 5W^{1/3}$	[English EQN C5.T2-5]
	W in lbs, D_{cd} in ft with a minimum distance of 15 ft	
	$D_{cd} = 1.98Q^{1/3}$	[Metric EQN C5.T2-6]
	Q in kg, D_{cd} in m with a minimum distance of 4.57 m	
	$W = D_{cd}^3/125$	[English EQN C5.T2-7]
	D_{cd} in ft, W in lbs, with a minimum W of 216 lb	
	$Q = D_{cd}^3/7.762$	[Metric EQN C5.T2-8]
	D_{cd} in m, Q in kg, with a minimum Q of 98.3 kg	
3.	$D_{cd} = 3.5W^{1/3}$	[English EQN C5.T2-9]
	W in lbs, D_{cd} in ft with a minimum distance of 15 ft	
	$D_{cd} = 1.39Q^{1/3}$	[Metric EQN C5.T2-10]
	Q in kg, D_{cd} in m with a minimum distance of 4.57 m	
	$W = D_{cd}^3/42.875$	[English EQN C5.T2-11]
	D_{cd} in ft, W in lbs, with a minimum W of 216 lb	
	$Q = D_{cd}^3/2.686$	[Metric EQN C5.T2-12]
	D_{cd} in m, Q in kg, with a minimum Q of 98.3 kg	
4.	$D_{cd} = 1.5W^{1/3}$	[English EQN C5.T2-13]
	W in lbs, D_{cd} in ft	
	$D_{cd} = 0.60Q^{1/3}$	[Metric EQN C5.T2-14]
	Q in kg, D_{cd} in m	
	$W = D_{cd}^3/3.375$	[English EQN 5 C5.T2-15]
	D_{cd} in ft, W in lb	
	$Q = D_{cd}^3/0.216$	[Metric EQN C5.T2-16]
	D_{cd} in m, Q in kg	
5.	$D_{cd} = 0.75W^{1/3}$	[English EQN C5.T2-17]
	W in lbs, D_{cd} in ft	
	$D_{cd} = 0.30Q^{1/3}$	[Metric EQN C5.T2-18]
	Q in kg, D_{cd} in m	
	$W = D_{cd}^3/0.422$	[English EQN C5.T2-19]
	D_{cd} in ft, W in lb	
	$Q = D_{cd}^3/0.027$	[Metric EQN C5.T2-20]
	D_{cd} in m, Q in kg	

C5.2.4. HPM. HPM allow a reduction in encumbered land by limiting the MCE to a quantity considerably less than that stored in the HPM. (NOTE: HPM are to be constructed per NAVFAC guidance, as outlined in Table AP1-1. of Reference (j), and are to be sited at the IMD provided by Table C9.T6.). HPM separation walls protect against fire propagation between internal storage areas. Although IMD provides nearly complete asset protection between HPM (MCE = 60,000 lbs [27,216 kg] maximum), AE damage may occur to about K9 [3.57] from a donor NEW > 350,000 lbs [158,757 kg].

C5.2.5. AGM. There are no DDESB construction criteria for AGM. However, such structures must meet the criteria of Chapters 6 and 7.

C5.2.6. Special Structures. The DDESB has approved reduced QD for structures and containers listed in Table AP1-4. of Reference (j).

C5.3. BARRICADES

C5.3.1. General

C5.3.1.1. Properly constructed and sited barricades and undisturbed natural earth have explosives safety applications for both protecting against low-angle fragments and reducing shock overpressure loads very near the barricade. Barricades provide no protection against high-angle fragments or lobbed AE. If the barricade is destroyed in the process of providing protection, then secondary fragments from the destroyed barricade must also be considered as part of a hazards analysis.

C5.3.1.2. To reduce hazards from high-velocity, low-angle fragments, the barricade must be placed between the PES and the ES so that the fragments of concern impact the barricade before the ES. The barricade must both be thick enough so that it reduces fragment velocities to acceptable levels and high enough so that it intercepts the ballistic trajectories of the fragments of concern.

C5.3.1.3. A barricade placed between a PES and an ES interrupts the direct line-of-sight motion of the shock wave. If the barricade has sufficient dimensions and is located close enough to the ES, significant reductions in shock loading to selected areas of the ES may be realized.

C5.3.2. Barricade Designs

C5.3.2.1. Chapter 6 of Reference (j) lists DDESB-approved designs and construction materials for barricades. Use of these barricades satisfies barricading criteria.

C5.3.2.2. Alternate barricade designs (e.g., earth-filled steel bin) may be approved by the DDESB, provided that testing or analysis demonstrates their effectiveness in stopping high-velocity, low-angle fragments.

C5.3.2.3. Barricade Size and Orientation for Protection Against High-Speed, Low-Angle Fragments. The location, height, and length of a barricade shall be determined as follows:

C5.3.2.3.1. Location. The barricade may be placed anywhere between the PES and the ES. The location shall determine the barricade's required height and length.

C5.3.2.3.2. Height. To determine the required barricade height:

C5.3.2.3.2.1. Establish a reference point at the top of the far edge of one of the two AE stacks between which the barricade is to be constructed. When both stacks are of equal height, the reference point may be established on either stack. If the tops of the two stacks are not of equal height (elevation), the reference point shall be on the top of the lower stack. To

preclude building excessively high barricades, the barricade should be located as close as possible to the stack on which the reference point was established. (See Figure C5.F3.)

C5.3.2.3.2.2. Draw a line from the reference point to the highest point of the other stack.

C5.3.2.3.2.3. Draw a second line from the reference point forming an angle of two degrees above the line.

C5.3.2.3.3. Length. The barricade's length shall be determined per Figure C5.F3.

C5.3.2.4. Barricade Size and Orientation for Protection Against Overpressure. General procedures to predict pressure mitigation versus barricade design and location have not been developed. However, based on direct-experimental work, the overpressure loading on a surface area shielded by a barricade is reduced by approximately 50 percent when the following conditions are met:

C5.3.2.4.1. Location. The barricade's standoff is within two barricade heights of the protected area.

C5.3.2.4.2. Height. The top of the barricade is at least as high as the top of the protected area.

C5.3.2.4.3. Length. The length of the barricade is at least two times the length of the protected area.

C5.3.3. Barricade Construction Materials

C5.3.3.1. Materials for earthen barricades shall be reasonably cohesive and free from harmful (toxic) matter, trash, debris, and stones heavier than ten pounds [4.54 kg] or larger than six inches [152 mm] in diameter. The larger of acceptable stones shall be limited to the lower center of fills. Earthen material shall be compacted and prepared, as necessary, for structural integrity and erosion control. Solid or wet clay or similar types of soil shall not be used in barricades because they are too cohesive. If it is impossible to use a cohesive material (e.g., in sandy soil) the barricade shall be finished with a suitable material (e.g., geotextiles, gunnite) that shall not produce hazardous debris, but shall ensure structural integrity.

C5.3.3.2. The slope of an earthen barricade must be two horizontal to one vertical, unless erosion controls are used. Earthen barricades with slopes no greater than one and one half horizontal to one vertical that were approved prior to 1976 may continue to be used. However, renovations to these facilities shall meet the above criteria, when feasible.

Figure C5.F3. Determination of Barricade Length and Height
(see subparagraph C5.3.2.3.)

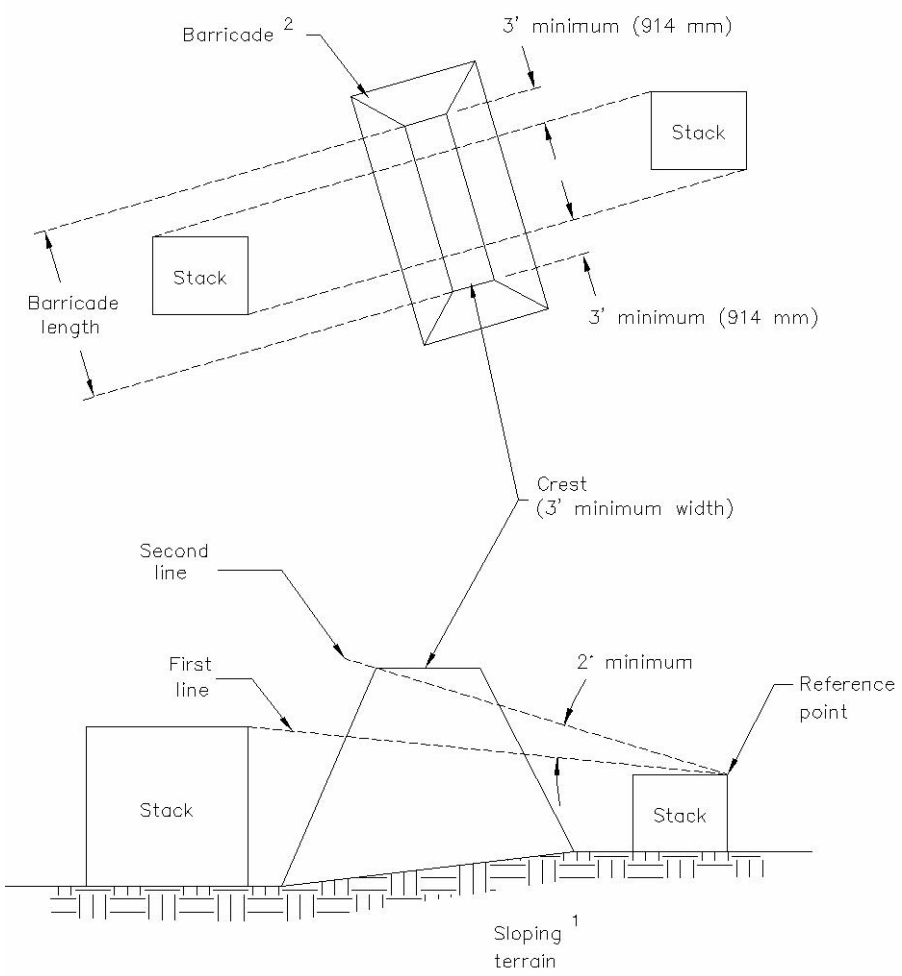

Notes for Figure C5.F3.:

1. This illustration is for sloping terrain; however, a similar approach is used for level terrain.
2. Barricade must meet construction and siting criteria of section C5.3.

C5.3.4. Portal Barricades for Underground Storage Facilities. Portal barricades allow reduction in IBD for underground magazines. Criteria for the location and construction of portal barricades are illustrated in Figure C5.F4. and include:

C5.3.4.1. Location. Portal (entry or exit) barricades shall be located immediately in front of an outside entrance or exit to a tunnel leading to an explosives storage point. The portal barricade should be centered on the extended axis of the tunnel that passes through the portal and shall be located a distance of not less than one and not more than three tunnel widths from the portal. The actual distance should be no greater than that required (based on the turning radius and operating width) to allow passage of any vehicles or materials handling equipment that may need to enter the tunnel.

C5.3.4.2. Height. The height of the barricade, along its entire width, shall be sufficient to intercept an angle of 10 degrees above the extended height of the tunnel.

C5.3.4.3. Width and Length

C5.3.4.3.1. The width of the central face typically equals the width of the tunnel at the portal.

C5.3.4.3.2. The front face (i.e., the face toward the entry or exit) shall be vertical and concave in plan view, consisting of a central face oriented perpendicular to the tunnel axis, and wing walls.

C5.3.4.3.3. The wing walls shall be of sufficient width so that the entire barricade length intercepts an angle of 10 degrees (minimum) to the right and left of the extended tunnel width.

C5.3.4.4. Construction. To withstand the impact of debris ejected from the tunnel, the front face (including wing walls) shall be constructed of reinforced concrete, with a minimum thickness equal to 10 percent of the barricade height, but in no case less than 12 inches [30.5 cm]. The concrete wall shall have a spread footing of sufficient width to prevent significant settlement. In addition, the central wall, wing walls, and footing shall be structurally tied together to provide stability. The backfill behind the concrete wall may be composed of any fill material, to include rock rubble from the tunnel excavation, with a maximum particle size of 6 inches [15.2 cm] within the area extending out to 3 feet [0.9 m] from the rear face of the wall.

Figure C5.F4. Portal Barricade Location, Height and Width (see paragraph C5.3.4.)

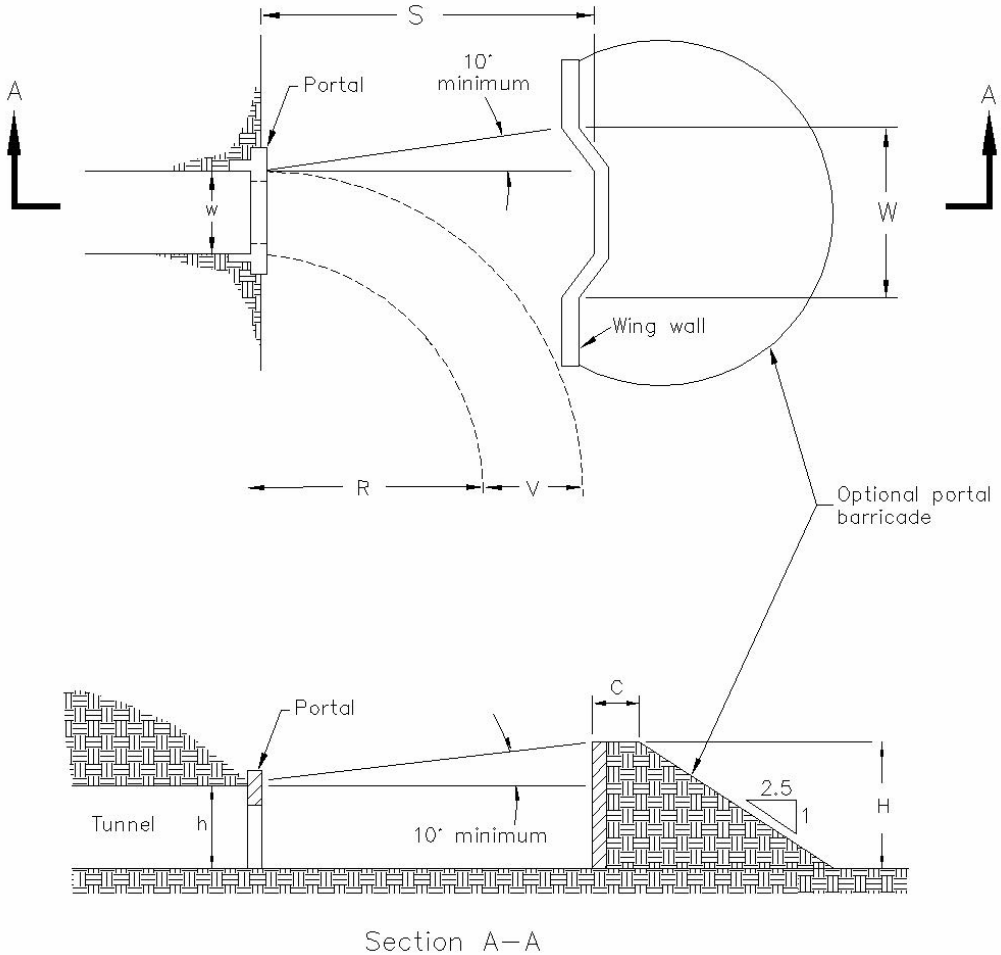

Legend for Figure C5.F4.:

S = Barricade standoff distance from portal
W = Width of barricade (excluding wing walls)
H = Height of barricade
V = Width of munitions transport vehicles
R = Turning radius of munitions transport vehicles
C = Crest width
w = Tunnel width at portal
h = height of tunnel

C5.3.5. Earth-Filled, Steel Bin-Type Barricades (ARMCO Revetments or Equivalent) for Outside Storage

C5.3.5.1. These barricades, also known as ARMCO, Inc. revetments, are earth-filled steel bins used to separate AE awaiting scheduled processing (e.g., AE on a flight line associated with aircraft parking or loading operations; or the temporary positioning of AE awaiting transfer to preferred, long-term storage). These barricades, which are also used to separate explosive-loaded aircraft, are normally used to form a series of cells. They are designed to limit the MCE, for QD siting purposes, of AE properly positioned in separate cells by preventing prompt detonation transfer to adjacent cells.

C5.3.5.2. ARMCO, Inc. Revetment Cells (see paragraph C6.2.3. of Reference (j)):

C5.3.5.2.1. ARMCO, Inc. revetments cells are approved for storage of any HD 1.1 and HD 1.2 AE assigned to SG 1 through 4, as discussed in paragraph C3.2.3. In addition, storage of HD 1.3, HD 1.4, or HD 1.6 items is approved.

C5.3.5.2.2. When properly sited, these cells prevent prompt detonation transfer; however, all assets in the series of cells are at risk of loss. Although a revetment is effective in limiting the blast loading of an adjacent ES to that produced by the largest contents of a single cell, there is a significant probability that the contents of many of the cells will be damaged or destroyed by the initial and subsequent fire and explosion events. The extent of such losses increases with the amount of explosives present.

C5.3.5.3. Types of ARMCO, Inc. Revetments

C5.3.5.3.1. Type A revetments, which must be a minimum of 7 feet [2.1 m] thick, can be used to limit a MCE in a series of cells to the largest quantity in a single cell, provided the quantity in the single cell does not exceed 30,000 pounds NEW [NEQ] [13,608 kg].

C5.3.5.3.2. Type B revetments, which must be a minimum of 5.25 feet [1.6 m] thick, can be similarly used to limit the MCE, provided no cell contains more than 5,000 pounds NEW [2,268 kg NEQ].

C5.3.5.4. For ARMCO, Inc. revetments to be used effectively, the following conditions must be met:

C5.3.5.4.1. The criteria shown in Figure C5.F3.

C5.3.5.4.2. AE shall be positioned no closer than 10 feet [3.1 m] from cell walls, no closer than 3 feet [0.9 m] from the end of the wing walls, and no higher than 2 feet [0.6 m] below the top of cell walls.

C5.3.5.4.3. AE shall be distributed over the available area within the cell, rather than being concentrated in a small area.

C5.3.5.4.4. AE stored in a cell in quantities near the maximum NEW limit shall not be configured into a single row of pallets, stacks, or trailers.

C5.3.5.4.5. The storage of AE in flammable outer-pack configurations shall be minimized.

C5.4. SITE AND GENERAL CONSTRUCTION PLANS REVIEW

C5.4.1. The following site and general construction plans shall be submitted to the DDESB for review and approval:

C5.4.1.1. New construction of:

C5.4.1.1.1. AE facilities. See Appendix 1 (AP1) for the definition of AE facility.

C5.4.1.1.2. Non-AE related facilities within QD arcs.

C5.4.1.2. Facility modifications, change of mission, or change of operations that increase explosive hazards (e.g., personnel exposures, NEW, change in HD, nature of operation).

C5.4.1.3. Change of use of non-AE related facilities that require application of more stringent explosives safety criteria. (For example, an airfield restricted to DoD use only, changed to joint DoD and non-DoD use.)

C5.4.2. Vulnerable facility construction. Although site plans for construction of vulnerable facilities (e.g., schools, high-rise buildings, restaurants) located on a DoD installation that are outside but near QD arcs are not required, it is recommended that they be submitted to the DDESB for review and comment.

C5.4.3. Site and general construction plans need not be submitted to the DDESB for facility modifications, change of mission, or change of operations that do not introduce additional explosives hazards or do not increase NEW, chemical agent hazards, or personnel exposure.

C5.4.4. Site Plan Submission Requirements

C5.4.4.1. Preliminary. When required by the DoD Component, Preliminary Site Plan submissions shall include, at a minimum, the information specified below in subparagraphs C5.4.4.3.1. to C5.4.4.3.6. and C5.4.4.3.12. (If sufficient detail is available, the Preliminary and Final Site Plan Submissions can be combined into a Final Site Plan Submission.)

C5.4.4.2. Final. Final Site Plan submission shall include the information in subparagraphs C5.4.4.3.1. to C5.4.4.3.12.

C5.4.4.3. Site Plan Contents. A Site Plan should consist of:

C5.4.4.3.1. The DoD Component's approval, in the transmittal document, of the proposal, along with any changes, modifications, or specific precautionary measures considered necessary.

C5.4.4.3.2. Drawings, at a scale of 1 in equals not more than 400 ft or metric equivalent. (Smaller scale drawings may periodically be necessary to properly reflect certain distance and structure relationships within the area surrounding a given project.) When standard drawings exist for a building or group of buildings that the DDESB has reviewed and declared

acceptable (the Definitive Drawing), the drawing does not need to be resubmitted. In such cases, the site plan must note the Definitive Drawings for each building or structure to be constructed.

C5.4.4.3.3. The distances between the facility to be constructed or modified and all ES within QD arcs impacted by the project, to include on- and off-installation power transmission and utility lines; the installation's boundary; public railways; and public highways.

C5.4.4.3.4. A description of use and occupancy of each ES within IBD of the facility to be constructed or modified.

C5.4.4.3.5. The NEW and HD of the AE that will be stored or handled in the facility to be constructed or modified or that will impact the project.

C5.4.4.3.6. Anticipated personnel limits for the new or modified facility, to include a breakdown by room or bay, when appropriate.

C5.4.4.3.7. Approved drawings or, when approved drawings are not used, general construction details to include the following: materials used, dividing walls, vent walls, firewalls, roofs, operational shields, barricades, exits, types of floor finish, fire protection system installations, electrical systems and equipment, ventilation systems and equipment, hazardous waste disposal systems, lightning protection system, static grounding systems, process equipment, and auxiliary support structures.

C5.4.4.3.8. A summary of the design procedures for any engineering protections that are to be used which the DDESB has not already approved. The summary shall include the following: a statement of the design objectives in terms of protection categories to be obtained (see Reference (j)), the explosives quantities involved, the design loads applied, any material properties and structural behavior assumptions made, references, and the sources of methods used. (Only engineers who are experienced in the field of structural dynamics and who use design procedures accepted by professionals in that field may design explosion resistant facilities.)

C5.4.4.3.9. Information on the type and arrangement of explosives operations or chemical processing equipment.

C5.4.4.3.10. A topography map, with contours (when terrain features are considered to provide natural barricading) or topography that otherwise influence the facility's layout, as in some chemical operations.

C5.4.4.3.11. When chemical agents are involved, also provide information on:

C5.4.4.3.11.1. Personnel protective clothing and equipment to be used.

C5.4.4.3.11.2. Treatment of all effluent and waste materials and streams.

C5.4.4.3.11.3. The adequacy of medical support.

C5.4.4.3.11.4. The average wind speed and direction.

C5.4.4.3.11.5. Other support facilities pertinent to chemical safety.

C5.4.4.3.11.6. The warning and detection systems to be used.

C5.4.4.3.11.7. Any hazard analysis performed.

C5.4.4.3.12. An indication of any deviations from pertinent safety standards that local conditions cause.

C5.4.4.4. Records

C5.4.4.4.1. The installation that submits the site plan shall maintain a copy of:

C5.4.4.4.1.1. The complete site plan and the final safety submission.

C5.4.4.4.1.2. A copy of the DDESB approval.

C5.4.4.4.2. Installations shall develop and maintain current (with the latest site plan approval) installation maps, and drawings that show QD arcs.

C5.4.4.4.3. Installations shall ensure that site plans are reconciled with the installation's Master Planning Documents.

C5.5. SITE PLANS NOT REQUIRED

Site plans are not required to be submitted to the DDESB for the specific situations listed below (DoD Components shall specify siting and documentation requirements for these situations):

C5.5.1. Storage and associated handling of HD 1.4S (see subparagraph C9.4.4.3.).

C5.5.2. Interchange yards limited to those operations described in paragraph C9.8.6.

C5.5.3. Inspection stations where only the operations described in paragraph C9.8.10. are performed.

C5.5.4. Parking of aircraft loaded with specific munitions (see subparagraph C9.6.1.1.2.2.) while in designated aircraft parking areas that meet airfield criteria, and associated handling of these munitions, provided the quantity of munitions involved in the operation is limited to a single aircraft load.

C5.5.5. The handling of HD 1.3 and HD 1.4 material ($\leq$ 300 lbs NEW) [$\leq$ 136.1 kg] necessary for ships' security and safety at sea (see subparagraph C9.6.2.1.2.2.).

C5.5.6. Storage of limited quantities of HD 1.2.2, HD 1.3, or HD 1.4, for reasons of operational necessity, as permitted by subparagraph C9.4.2.10. and applicable notes of Tables C9.T13. and C9.T14.

C5.5.7. Certain contingency and combat training operations as described in section C10.3.

C5.5.8. Inert storage accessed by personnel related to the explosives mission.

C5.5.9. Locations used for a demilitarization processing operation of expended .50-caliber and smaller cartridge casings that meet subparagraphs C9.8.19.1. and C9.8.19.2., and are located outside of IBD from all PES.

C6. CHAPTER 6
ELECTRICAL STANDARDS

C6.1. GENERAL

This chapter establishes safety standards for the design and installation of electrical equipment and wiring for explosives environments.

C6.1.1. For this purpose, the Department of Defense adopts Article 500 of the Code "Hazardous (Classified) Locations" of the National Fire Protection Association (NFPA) 70 (Reference (l)) (a.k.a., National Electrical Code (NEC)). This Code establishes standards for the design and installation of electrical equipment and wiring for atmospheres containing combustible dusts, flammable vapors or gasses that are comparably hazardous.

C6.1.2. This chapter does not address extraordinarily hazardous situations (e.g., nitroglycerin manufacturing) that will require special consideration and design features. In these situations, the DoD Components shall develop site-specific design criteria.

C6.2. HAZARDOUS LOCATIONS

NEC definitions of Class I, Division 1 and Class II, Division 1 hazardous locations are modified as follows for DoD explosives applications:

C6.2.1. Areas containing explosives dusts or explosives that may through handling produce dust capable of being dispersed in the atmosphere shall be regarded as Class II, Division 1.

C6.2.2. Areas in which explosives sublimation or condensation may occur shall be regarded as both Class I, Division 1 and Class II, Division 1.

C6.3. SPECIAL OCCUPANCIES

To ensure assignment to the proper hazardous location, class, and group, it is necessary to have knowledge of the properties of explosives involved. Minimum requirements include sensitivity to heat and spark and thermal stability.

C6.3.1. If the properties of an explosive are such that Class I or Class II, or both, provide inadequate protection under prevailing conditions, use of any of the following approaches is acceptable:

C6.3.1.1. Intrinsically safe equipment.

C6.3.1.2. Purged or pressurized and suitably temperature-limited equipment.

C6.3.1.3. Exclusion of electrical equipment from the hazardous atmosphere.

C6.3.1.4. Isolation of equipment from the hazardous atmosphere by means of dust, vapor, or gas-free enclosures with surface temperatures positively maintained at safe levels.

C6.3.2. Underground Storage Facilities. All wiring and electrical equipment in underground storage facilities shall, in addition to any other requirements of this chapter, be of moisture and corrosion-resistant materials and construction unless a site-specific analysis indicates that such construction is not necessary. Underground facilities shall have emergency lighting systems to provide minimum illumination in the event of a power failure.

C6.4. STATIC ELECTRICITY

Personnel and equipment in hazardous locations (section C6.2.) and locations where static sensitive Electro-Explosive Device (EED) are exposed shall be grounded in a manner that effectively discharges static electricity and prevents static electricity accumulations that may be capable of initiating dusts, gases, vapors, or exposed EED. Permanent equipment in contact with conductive floors and tabletops shall not be considered grounded. Static grounds shall be bonded to the facility's grounding system. (See Chapter 7.)

C6.5. ELECTRIC SUPPLY SYSTEMS

There may be mutual hazards when PES are located near electric supply lines. To protect against these hazards, the following separation requirements apply to all new construction (PTRD and IBD specified in paragraphs C6.5.3. and C6.5.4. are based on airblast overpressure only; fragment distances do not apply):

C6.5.1. Electric lines serving explosives operating facilities shall be installed underground from a point not less than 50 ft [15.3 m] away from such facilities.

C6.5.2. Overhead electric service lines shall be no closer to combustible PES or to an open PES than the length of the electric lines between the nearest service poles and the length of the nearest service pole. An exception is when an effective means (e.g., line spacers, weights) is provided to ensure that energized lines on breaking cannot come into contact with the facility or its appurtenances.

C6.5.3. Electric distribution lines carrying less than 69 kilovolt (kV), the tower or poles supporting those lines, and unmanned electrical substations shall be no closer to PES than PTRD. (Lesser distance permitted by section C9.4. for the placement of electrical substations and transformers that support explosives areas.)

C6.5.4. Electric transmission lines carrying 69 kV or more and the tower or poles supporting them shall be located no closer to the PES than:

C6.5.4.1. IBD, if the line in question is part of a grid system serving a large off-base area.

C6.5.4.2. PTRD, if loss of the line does not create serious social or economic hardships.

C6.5.5. Electric transmission lines that can be interrupted without loss of power (i.e., power is rerouted through existing lines or networks) shall be separated from explosives sites in accordance with paragraph C6.5.2.

C6.6. HAZARDS OF ELECTROMAGNETIC RADIATION TO ORDNANCE (HERO)

Military Munitions (at times also referred to as ordnance or AE) containing Electrically Initiated Devices (EID) shall be designed or protected such that Electromagnetic Radiation (EMR) does not cause their inadvertent initiation, degradation, or disablement. Both direct Radio Frequency-(RF) induced actuation of the EID or electrical coupling to and triggering of the associated firing circuits can occur, especially in a tactical radiated Electromagnetic Environment (EME). Examples of EID include the following: exploding foil initiators, laser initiators, burn wires, fusible links, and EED, such as hot bridge wires, carbon bridges, and conductive compositions.

C6.6.1. During acquisition, HERO testing and certification shall be accomplished, both for routine employment mission profiles, and for any anticipated joint- or combined-operational employment to include transshipment exposures through EME differing from the employment environment.

C6.6.2. During subsequent phases of life cycle munitions management, additional HERO testing and certification shall be accomplished when legacy munitions are redesigned or before any employment through EME for which they where not previously HERO certified.

C6.6.3. Minimally, HERO certification shall involve exposure without adverse effects of the munitions to the EME relevant to all life cycle configurations, including packaging, handling, storage, transportation, checkout, loading and unloading, and launch.

C6.6.4. All HERO test and certification data shall be compiled in a centralized data repository to support the Joint Spectrum Center Ordnance Electromagnetic Environmental Effects (E3) Risk Assessment Database (JOERAD), for subsequent use in information applications supporting Combatant Commands and the DoD Components.

C6.6.5. The DoD Components shall take measures (e.g., identifying susceptibilities, quantifying electromagnetic environments, evaluating risks associated with operating procedures, and establishing tailored Emission Control (EMCON) instructions) to ensure that HERO effects on munitions are resolved during the planning of joint or combined operations or training exercises.

C7. CHAPTER 7
LIGHTNING PROTECTION

C7.1. POLICY

This chapter defines minimum explosives safety criteria for the design, maintenance, testing, and inspection of Lightning Protection Systems (LPS). Properly maintained LPS are required (with exceptions) for AE facilities. If other LPS for these facilities are used, they shall offer equivalent protection to the types prescribed herein.

C7.2. LPS DESIGN

C7.2.1. Design and installation of an LPS used to protect DoD AE must meet, at a minimum, the requirements of NFPA 780 Lightning Protection Code (Reference (m)). LPS must feature air terminals, low impedance paths to ground, sideflash protection, surge suppression or grounding of all conductive penetrations into the protected area, and earth electrode systems. Structural elements of the building may serve as air terminals, down conductors, or the earth electrode. LPS used to protect DoD AE must be designed to intercept lightning at a 100 ft [30.5 m] or less striking distance arc in accordance with Reference (m).

C7.2.1.1. Air Terminals. An air terminal is a component of an LPS that is able to safely intercept lightning strikes. Air terminals may include overhead wires or grids, vertical spikes, or a building's grounded structural elements. Air terminals must be capable of safely conducting a lighting strike.

C7.2.1.2. Down Conductors. Down conductors (flat or round) provide low impedance paths from the air terminals to the earth electrode (ground) system. Structural elements having a high-current capacity and a low impedance to ground need not be augmented with wires. Where wires are used as down conductors, these shall meet the requirements of Reference (m).

C7.2.1.3. Sideflash Protection. Protection from sideflash caused by lightning shall be obtained by either separation distance or bonding in accordance with Reference (m), except as modified herein.

C7.2.1.3.1. Fences and railroad tracks located within six feet of a structure's LPS shall be bonded to the structure's LPS.

C7.2.1.3.2. The reinforcing bars in adjacent structural elements must be joined in a manner to provide electrical bonding between the elements. This is an absolute requirement for facilities that are used to store AE. Techniques commonly used and approved in the construction industry to join reinforcing steel are acceptable for this purpose. The steel arch of an ECM must be similarly joined to the rebar in the floor.

C7.2.1.4. Surge Protection for Incoming Conductors. An LPS shall include surge protection for all incoming conductors. The surge protection must include suppression at the entrance to the building from each wire to ground. Shielded cabling, power cabling, communication lines, and electrical conduit shall be buried underground in conduit for a minimum of 50 feet [15.3 m] before entering the structure. All other metallic utility lines and pipes must be electrically connected to the LPS or the structural steel of the building just before they enter the building.

C7.2.1.5. Earth Electrode System. Earth electrode systems dissipate the current from a lightning strike to ground. Earth electrode systems may be Ufer grounds, ground loop conductors, radials, grounding rods, ground plates, a cable immersed in nearby salt water, chemical grounds that are installed for the purpose of providing electrical contact with the earth, or combinations of these.

C7.2.2. Underground Storage Facility.
An underground storage site normally requires designed protection against lightning only for exposed or partially exposed parts. Metal and structural parts of the site that have less than 2 feet [60 cm] of earth cover shall be protected as for an aboveground site. Lightning protection requirements shall be considered on a site-specific basis.

C7.3. INSPECTION, TESTING, AND TRAINING

C7.3.1. Visual inspection. LPS shall be periodically inspected at a frequency determined by each DoD Component. Visual inspections shall be conducted at least yearly.

C7.3.2. Electrical tests. LPS shall be periodically tested electrically as specified in subparagraphs C7.3.2.1. and C7.3.2.2. Electrical testing shall be accomplished at least every 2 years.

C7.3.2.1. Bonding (Resistance) Tests. Bonding (resistance) tests shall be conducted periodically (or after facility modification that may affect bonding). A maximum resistance value of one ohm is permitted across all bonds.

C7.3.2.2. Resistance to Earth Tests. Resistance to earth tests of LPS shall be conducted periodically during the same season of the year (or after facility modification that may have affected the system).

C7.3.3. Records. Records of resistance to earth tests shall be kept on file for the last six inspection cycles. These records shall be reviewed for trend analysis.

C7.3.4. Training. Personnel responsible for maintenance, inspection, and testing must be familiar with the fundamentals described in Reference (m) and herein as they relate to AE facilities to ensure requirements of paragraphs C7.3.1. and C7.3.2. are met.

C7.4. LIGHTNING PROTECTION EXCEPTIONS

Properly maintained LPS are required for AE facilities, with the follow exceptions:

C7.4.1. Explosives operations served by a local lightning warning system that permit operations to be terminated before the incidence of an electrical storm, if all personnel are provided with protection equivalent to PTRD, and the damage from a lighting strike is acceptable to the DoD Component.

C7.4.2. Facilities containing only AE that cannot be initiated by lightning, as determined by the DoD Component concerned and approved by DDESB, and where no fire hazard exists.

C7.4.3. Facilities where personnel are not expected to sustain injury and at the same time, the resulting economic loss of the structure, its contents, and/or surrounding facilities is minimal.

C8. CHAPTER 8
HAZARD IDENTIFICATION FOR FIREFIGHTING AND EMERGENCY PLANNING

C8.1. SCOPE AND APPLICABILITY

C8.1.1. This chapter establishes standard firefighting hazard identification measures to ensure a minimum practicable risk in fighting fires involving AE. These identification measures are based on the classification of AE fires into four fire divisions according to their predominant hazard. Guidelines are provided to DoD Components for the development of emergency plans, which include safety, security, and environmental protection. These plans shall be coordinated with local authorities.

C8.1.2. The following are outside the scope of this chapter and are the responsibility of the DoD Component:

C8.1.2.1. Firefighting procedures.

C8.1.2.2. Training of firefighting personnel.

C8.1.2.3. Use and maintenance of firefighting equipment and vehicles.

C8.1.2.4. Provision of water supply and alarm systems.

C8.1.2.5. First aid measures.

C8.1.2.6. Other measures required in firefighting.

C8.1.3. AE hazard symbols and supplemental symbols including chemical agent symbols (see section C8.4.) are for firefighting situations.

C8.2. FIRE DIVISIONS

There are four fire divisions. Fire division 1 indicates the greatest hazard. The hazard decreases with ascending fire division numbers from 1 to 4 and is related to HD as shown in Table C8.T1.

Table C8.T1. Fire Divisions

Fire Division	Predominant Hazard	HD
1	Mass explosion	1.1 and 1.5
2	Non-mass explosion, fragment producing	1.2 and 1.6
3	Mass fire, minor blast or fragment	1.3
4	Moderate fire, no blast or fragment	1.4

C8.3. FIRE DIVISION SYMBOLS

C8.3.1. The four fire divisions are represented by four distinctive symbols so that firefighting personnel can recognize the hazards. A fire division number is shown on each symbol. For the purpose of identifying these symbols from long range, the symbols differ in shape as shown in Table C8.T2.

Table C8.T2. Fire Division Symbols

Shape	Fire Division Symbol
Octagon	1
Cross	2
Inverted triangle	3
Diamond	4

C8.3.2. The shape and dimensions of the symbols are shown in Figure C8.F1. This shape and color scheme is consistent with UN, North Atlantic Treaty Organization (NATO), and International Maritime Organization (IMO) requirements. For application on doors or lockers inside buildings, half-sized symbols may be used.

C8.3.3. At the discretion of the DoD Components, circumstances (e.g., security) may make it undesirable to post fire symbols at an AE storage site.

C8.4. CHEMICAL AGENT AND CHEMICAL MUNITION HAZARD SYMBOLS

C8.4.1. The storage of chemical agents and chemical munitions requires the use of chemical hazard symbols. These symbols (see Figures C8.F2. and C8.F3.) shall be used in conjunction with fire symbols, where appropriate. Some of the common chemical agents used in AE, the CG of that AE, and the chemical hazard symbols required in storage are specified in Table C8.T3.

C8.4.2. The following sections describe these symbols, the hazards indicated by the symbols, and the recommended protective clothing and equipment to be used for fighting fires involving these chemical agents and chemical munitions. The DoD Components shall determine protective clothing requirements for other than firefighting situations.

Figure C8.F1. Fire Division Symbols

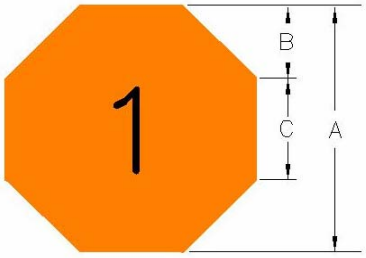

Fire Division 1 or 5

24–inch: NSN 7690–01–082–0290
12–inch: NSN 7690–01–081–9581

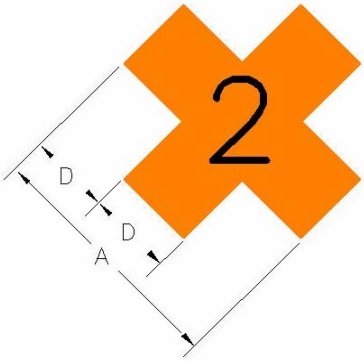

Fire Division 2 or 6

24–inch: NSN 7690–01–082–0289
12–inch: NSN 7690–01–087–7340

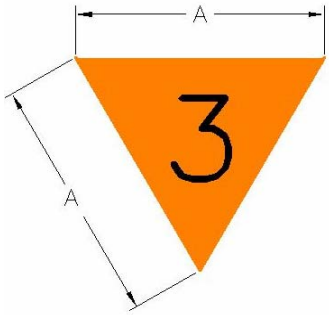

Fire Division 3

24–inch: NSN 7690–01–081–9583
12–inch: NSN 7690–01–081–9582

Fire Division 4

24–inch: NSN 7690–01–082–6709
12–inch: NSN 7690–01–081–9584

Dimensions	Large Symbol		Small Symbol	
	inches	metric (mm)	inches	metric (mm)
A	24	610	12	305
B	7	178	3.5	89
C	10	254	5	127
D	8	203	4	102
Letters (height)	10	254	5	127
Letters (thickness)	2	51	1	25

Colors (per Federal Standard 595A or General Services Administration (GSA) Catalog)

Background: Orange #12246
Letters: Black # 17038

Figure C8.F2. Chemical Hazard Symbols

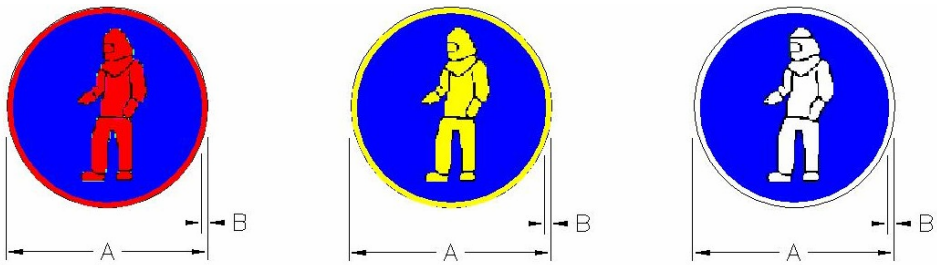

Symbol 1. Wear full protective clothing.

Background is blue, and figure and rim are as follows:

Red for Set 1 Protective Clothing:
24–inch: NSN 7690–01–081–9586
12–inch: NSN 7690–01–081–9585

Yellow for Set 2 Protective Clothing:
24–inch: NSN 7690–01–081–9587
12–inch: Not available

White for Set 3 Protective Clothing:
24–inch: NSN 7690–01–083–6272
12–inch: NSN 7690–01–081–9588

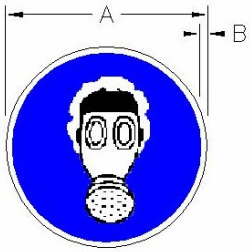

Symbol 2. Wear breathing apparatus.

Background is blue.
Figure and rim are white.
24–inch: NSN 7690–01–081–9589
12–inch: NSN 7690–01–082–0291

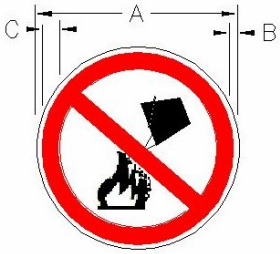

Symbol 3. Apply no water.

Background is white.
Circle and Diagonal are red.
Figures are in black.
24–inch: NSN 7690–01–082–2254
12–inch: NSN 7690–01–082–0292

Dimensions	Large Symbol		Small Symbol	
	inches	metric (mm)	inches	metric (mm)
A	24	610	12	305
B	.5	13	.25	6
C	2	51	1	25

Colors (per Federal Standard 595A or GSA Catalog)

Red #11105
Blue #15102
Yellow #13538
White # 17875
Black #17038

Figure C8.F3. Supplemental Chemical Hazard Symbols

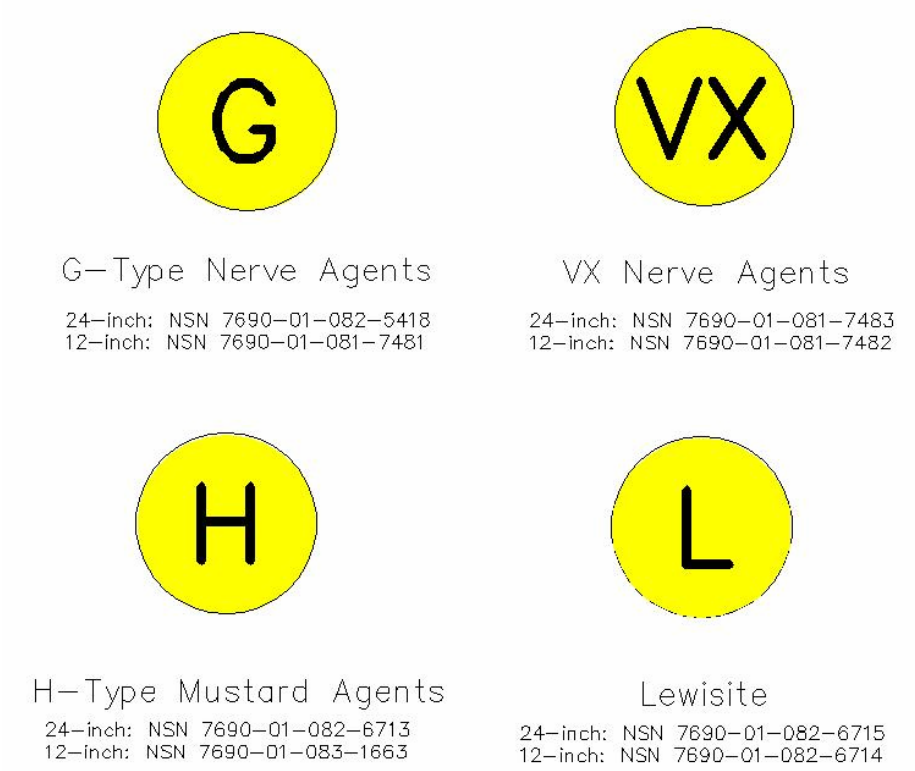

Colors (per Federal Standard 595A or GSA Catalog)
Background: Yellow #13538
Letters: Black # 17038, as follows:

(a) 12 inches [305 mm] high and 2 inches [51 mm] thick on a 24-inch [610 mm] diameter circle.

(b) 6 inches [152 mm] high and 1-inch [25 mm] thick on a 12-inch [305 mm] diameter circle.

Table C8.T3. Compatibility Group and Chemical Hazard Symbols Required for Storage of Chemical Ammunition and Substances

Chemical Agents and Munitions	**CG [2]**	**Full Protective Clothing**			**Breathing Apparatus**	**Apply No Water**
		Set 1	**Set 2**	**Set 3**		
Toxic Agents[1]	K	X				
Tear Gas, O-Chlorobenzol	G		X			
Smoke, Titanium Tetrachloride	G		X			
Smoke, Sulphur trioxide-chlorosulphonic acid solution	G		X			
Smoke, Aluminum-zinc oxide-hexachloroethane	G				X	X
White Phosphorous	H			X		
White Phosphorous plasticized	H			X		
Thermite or Thermate	G				X	X
Pyrotechnic Material	G				X	X
Calcium Phosphide	L				X	X
Signaling Smokes	G				X	
Isobutyl methacrylate with oil	J				X	
Napalm (NP)	J			X	X	X
Triethylaluminim	L			X		X

Notes for Table C8.T3.:

1. Toxic Agents without explosives components that normally would be assigned to HD 6.1 may be stored as CG K.
2. See Chapter 3 for information pertaining to CG.

C8.4.2.1. Set 1 of Chemical Hazard Symbol 1 requires full protective clothing (see Figure C8.F2. and Table C8.T3.) and indicates the presence of highly toxic chemical agents that may cause death or serious damage to body functions. The following full protective clothing shall be used:

C8.4.2.1.1. Service-certified protective gas mask.

C8.4.2.1.2. Impermeable suit.

C8.4.2.1.3. Impermeable hood.

C8.4.2.1.4. Impermeable boots.

C8.4.2.1.5. Impermeable undergarments.

C8.4.2.1.6. Impermeable coveralls.

C8.4.2.1.7. Impermeable protective footwear.

C8.4.2.1.8. Impermeable gloves.

C8.4.2.2. Set 2 of Chemical Hazard Symbol 1 requires full protective clothing (see Figure C8.F2. and Table C8.T3.) and indicates the presence of harassing agents (riot control agents and smokes). The following protective clothing shall be used:

C8.4.2.2.1. Service-certified protective gas masks or Self-Contained Breathing Apparatus (SCBA).

C8.4.2.2.2. Permeable coveralls.

C8.4.2.2.3. Protective gloves.

C8.4.2.2.4. Firefighting personnel equipped with normal heat-resistant clothing (e.g., bunker suit) and gas mask or SCBA do not require the set 2 protective clothing.

C8.4.2.3. Set 3 of Chemical Hazard Symbol 1 requires full protective clothing (see Figure C8.F2. and Table C8.T3.) and indicates the presence of WP or other spontaneously combustible material. The following protective clothing shall be used:

C8.4.2.3.1. Service-certified protective gas masks or SCBA.

C8.4.2.3.2. Flame-resistant coveralls.

C8.4.2.3.3. Flame-resistant gloves.

C8.4.2.3.4. Firefighting personnel equipped with normal heat-resistant clothing (e.g., bunker suit) and gas mask or SCBA do not require the set 3 protective clothing.

C8.4.2.4. Chemical hazard symbol 2 requires the wearing of breathing apparatus (see Figure C8.F2. and Table C8.T3.) and indicates the presence of incendiary or readily flammable chemical agents that present an intense radiant heat hazard. Protective masks shall be used to prevent inhalation of smoke from burning incendiary mixtures.

C8.4.2.5. Chemical hazard symbol 3 warns against applying water (see Figure C8.F2. and Table C8.T3.) and indicates a dangerous reaction will occur if water is used in an attempt to extinguish fire.

C8.5. FIREFIGHTING MEASURES

C8.5.1. Firefighters should have a thorough knowledge of the hazards associated with AE fires and expected AE reactions. The DoD Component shall brief the firefighting forces and other essential personnel before approaching the scene of the fire. They shall be informed of the known hazards and conditions existing at the fire scene prior to proceeding to the fire location.

C8.5.2. Fires involving AE will be fought according to the HD, fire division, the progression of the fire, and the procedures specified by the DoD Component. Special firefighting

instructions addressing AE hazards will be developed according to the needs of the DoD Component.

C8.5.3. All fires in the vicinity of AE shall be immediately reported and:

C8.5.3.1. Shall be fought if not involving AE.

C8.5.3.2. Shall not be fought if the fire involves AE, or is supplying heat to the AE, or is so large that it cannot be extinguished with the equipment at hand. Personnel shall be evacuated per paragraph C8.5.4.

C8.5.4. Emergency Withdrawal Distances. Commanders are responsible for developing evacuation plans that include the applicable withdrawal distances as part of the installation's emergency planning (see section C8.6.).

C8.5.4.1. Nonessential Personnel. These emergency withdrawal distances are intended for application in emergency situations only and are not used for facility siting.

C8.5.4.1.1. The initial withdrawal distance for nonessential personnel shall be at least IBD for the PES involved. If the fire involves AE, AE involvement is imminent, or the fire is or may become uncontrollable, then use the emergency withdrawal distances listed in Table C8.T4. The emergency withdrawal distances depend on fire involvement and on whether or not the HD, fire division and quantity of explosives are known. If fire is not affecting AE or involvement is not imminent, then emergency authorities shall determine the withdrawal distance based on the situation at hand.

C8.5.4.1.2. Structures or protected locations offering equivalent protection for the distances in Table C8.T4. may be used in lieu of relocating personnel from the structure or location to the specified emergency withdrawal distance.

C8.5.4.2. Essential Personnel. Emergency authorities on site shall determine the withdrawal distance for essential personnel at accidents. Emergency authorities shall determine the essential personnel.

C8.5.5. AE containing both explosives and chemical agents (see Table C8.T3.) requires special attention and precautions in firefighting. Fires involving such AE shall be fought in accordance with their fire division characteristics. Responding personnel must consider the additional hazards and precautions discussed in Chapter 11 for the chemical agents involved.

C8.5.6. Entry to underground storage facilities following a fire or explosion requires special precautions. Emergency personnel shall monitor for the presence of toxic fumes or oxygen-depleted atmospheres and evaluate structural damage during initial entry following an accident. Commanders shall develop written procedures that define actions to be taken in such emergency situations.

C8.6. EMERGENCY PLANNING

C8.6.1. Installations or responsible activities shall develop Standard Operating Procedures (SOP) or plans designed to provide safety, security, and environmental protection for accidents involving AE. Plans shall be coordinated with the applicable Federal, State, and local emergency response authorities (e.g., law enforcement, fire departments, and hospitals) and any established Local Emergency Planning Committees (LEPC). The SOP or plans shall include the following:

C8.6.1.1. Specific sections and guidance that address emergency preparedness, contingency planning, and security. (For security, the SOP or plans shall limit access to accident sites to trained and authorized personnel.)

C8.6.1.2. Procedures that minimize the possibility of an unpermitted or uncontrolled detonation, release, discharge, or migration of AE out of any storage unit when such release, discharge, or migration may endanger human health or the environment.

Table C8.T4. Emergency Withdrawal Distances for Non-Essential Personnel[1]

HD	UNKNOWN QUANTITY (ft) [m]	KNOWN QUANTITY (ft) [m]
Unknown, located in facility, truck and or tractor trailer	4,000 *[1,219]*	4,000 *[1,219]*
Unknown, located in railcar	5,000 *[1,524]*	5,000 *[1,524]*
1.1[2] and 1.5	Same as unknown facility, truck,trailer, or railcar as appropriate	For Transportation: NEWQD ≤ 500 lb D = 2,500 ft *NEWQD ≤ 226.8 kg* *D = 762 m* NEWQD > 500 lb D = 5,000 ft for railcars D =4,000 ft for other modes *NEWQD > 226.8 kg* *D = 1,524 m for railcars* *D =1,219 m for other modes* For bombs and projectiles with caliber 5-in [127 mm] or greater D = 4,000 ft D = 1,219 m For Facilities: NEWQD ≤ 15,000 lb D = 2,500 ft *NEWQD ≤ 6,804 kg* *D = 762 m* 15,000 lbs < NEWQD ≤ 55,285 lbs D = 4,000 ft *6,804 kg < NEWQD ≤ 25,077 kg* *D = 1,219 m* NEWQD > 55,285 lbs $D = 105W^{1/3}$ *NEWQD > 25,077 kg* $D = 41.65Q^{1/3}$
1.2[2] and 1.6	2,500 *[762]*	2,500 *[762]*
1.3	600 *[183]*	Twice IBD with a 600 ft (183 m) minimum (C9.T13)
1.4	300 *[91.5]*	300 *[91.5]*

Notes for Table C8.T4.:

1. Emergency withdrawal distances do not consider the potential flight range of propulsion units.
2. For HD 1.1 and HD 1.2 AE, if known, the maximum range fragments and debris shall be thrown (including the interaction effects of stacks of items, but excluding lugs, strongbacks, and or nose and tail plates) may be used to replace the distances given.

C8.6.1.3. Provisions for prompt notification to emergency response and environmental agencies and the potentially affected public for an actual or potential detonation or uncontrolled release, discharge, or migration of AE that may endanger human health or the environment.

C8.6.1.4. Provisions for complying with the "Emergency Planning Community Right-To-Know Act (EPCRA)" (Reference (n)), and DoD or DoD Component implementing policies.

C9. CHAPTER 9
QUANTITY-DISTANCE AND SITING

C9.1. GENERAL

The damage or injury potential of explosions is normally determined by the separation distance between PES and ES; the ability of the PES to suppress blast overpressure, primary and secondary fragments; and the ability of the ES to resist explosion effects. This chapter:

C9.1.1. Defines permissible exposures for both accidental and intentional detonations.

C9.1.2. Sets minimum standards for separation distances between PES and ES by taking into account anticipated explosion effects, suppression, and resistance.

C9.1.3. Establishes explosives safety siting criteria (QD relationships) for PES and ES, based on blast, fragment, firebrand, thermal, and groundshock effects. QD is determined by the effect requiring the greatest distance.

C9.2. DETERMINING THE QUANTITY OF EXPLOSIVES

C9.2.1. General. The NEWQD in an AE facility is calculated as shown below. If DDESB-approved buffer configurations are provided, the NEWQD is the explosives weight of the largest stack plus the explosives weight of the buffer material, excluding the NEW of HD 1.4. Where the DDESB has approved an HE equivalence for a propellant or pyrotechnic, then this HE equivalence may be used in determining NEWQD. (The JHCS provides explosives weights for all DoD Hazard Classified AE.)

C9.2.1.1. Mass-explosion (HD 1.1). The NEWQD is the total High Explosive Weight (HEW) and the total Net Propellant Weight (NPW). For HD 1.1, NEWQD equals the NEW.

C9.2.1.2. Non-mass Explosion, Fragment Producing (HD 1.2).

C9.2.1.2.1. HD 1.2.1. The NEWQD is the HEW plus the NPW in all HD 1.2.1 items. In certain situations, the MCE, as outlined in subparagraph C9.4.2.5., shall be used as the basis for determining applicable QD.

C9.2.1.2.2. HD 1.2.2. The NEWQD is the HEW plus the NPW in all HD 1.2.2 items.

C9.2.1.2.3. HD 1.2.3. The NEWQD is the HEW plus the NPW in all HD 1.2.3 items. This material is treated as HD 1.3, however, a minimum IBD shall apply, as outlined in subparagraph C9.4.2.12.

C9.2.1.3. Mass Fire, Minor Blast, or Fragment (HD 1.3). The NEWQD is the HEW plus the NPW plus the total weight of pyrotechnics in all HD 1.3 items.

C9.2.1.4. Moderate Fire, No Blast, or Fragment (HD 1.4). The NEWQD is the HEW plus the NPW plus the total weight of pyrotechnics in all HD 1.4 items.

C9.2.1.5. Explosive Substance, Very Insensitive (With Mass Explosion Hazard) (HD 1.5). The NEWQD is the HEW plus the NPW in all HD 1.5 items. For HD 1.5, NEWQD equals the NEW.

C9.2.1.6. Explosive Article, Extremely Insensitive (HD 1.6). The NEWQD is the total weight of EIDS in all HD 1.6 items. However, the weight of EIDS in a single HD 1.6 item shall also be considered, as specified in Table C9.T15., for determining QD.

C9.2.1.7. Exclusions. Munitions' fillers that do not contribute to explosive effects (e.g. colored and HC smoke, dyes, irritants, WP, PWP, and TPA) are excluded when determining NEWQD.

C9.2.2. Determining the NEWQD for Mixed HD

C9.2.2.1. General

C9.2.2.1.1. The presence of HD 1.4 does not affect the NEWQD of mixed HD. However, for QD determinations, HD 1.4 criteria shall be considered.

C9.2.2.1.2. When HD 1.1 is mixed with any other HD, treat the mixture as HD 1.1 except as noted in subparagraph C9.2.2.2.

C9.2.2.1.3. HD 1.5 is always treated as HD 1.1.

C9.2.2.1.4. When dissimilar HD 1.6 are mixed and have not been tested to ensure non-propagation, the mixed HD 1.6 AE shall be individually considered to be HD 1.2.1 or HD 1.2.2, based on their individual NEWQD or over-riding fragmentation characteristics.

C9.2.2.2. HD 1.1 with HD 1.2 (HD 1.2.1, HD 1.2.2, and HD 1.2.3). Use whichever of the following generates the largest QD:

C9.2.2.2.1. Sum the NEWQD for HD 1.1 and NEWQD for HD 1.2 and treat the mixture as HD 1.1.

C9.2.2.2.2. The NEWQD of the mixture is the NEWQD of the HD 1.2 subdivision requiring the largest QD.

C9.2.2.3. HD 1.1 with HD 1.3. Sum the NEWQD for HD 1.1 and the NEWQD for HD 1.3 and treat the mixture as HD 1.1.

C9.2.2.4. HD 1.1 with HD 1.6. Sum the NEWQD for HD 1.1 and the NEWQD for HD 1.6 and treat the mixture as HD 1.1.

C9.2.2.5. HD 1.2.1 with HD 1.2.2. The NEWQD for the mixture is the NEWQD of the subdivision requiring the largest QD.

C9.2.2.6. HD 1.2.1 with HD 1.2.3. The NEWQD for the mixture is the NEWQD of the subdivision requiring the largest QD.

C9.2.2.7. HD 1.2.2 with HD 1.2.3. The NEWQD for the mixture is the NEWQD of the subdivision requiring the largest QD.

C9.2.2.8. HD 1.2.1 with HD 1.2.2 with HD 1.2.3. The NEWQD for the mixture is the NEWQD of the subdivision requiring the largest QD.

C9.2.2.9. HD 1.2 (HD 1.2.1, HD 1.2.2, and HD 1.2.3) with HD 1.3. The NEWQD for the mixture is the NEWQD of the HD requiring the largest QD.

C9.2.2.10. HD 1.2 (HD 1.2.1, HD 1.2.2, and HD 1.2.3) with HD 1.6. Treat the HD 1.6 as HD 1.2.3 and determine NEWQD in accordance with (IAW) subparagraphs C9.2.2.6. through C9.2.2.8., as applicable.

C9.2.2.11. HD 1.3 with HD 1.6. Sum the NEWQD for the HD 1.6 and the NEWQD for the HD 1.3 and treat the mixture as HD 1.3.

C9.3. QD PRINCIPLES

C9.3.1. General

C9.3.1.1. The bases for determining required separation distances (i.e.,QD) are:

C9.3.1.1.1 The HD types and NEWQD of AE present in an AE facility.

C9.3.1.1.2. The NEWQD of the HD requiring the greatest separation establishes the QD for the facility when it is used for multiple operations.

C9.3.1.1.3. The NEWQD for the HPM is based on its MCE (i.e., the sum of the contents of an individual open cell and the loading dock, rather than the aggregate NEWQD for the entire magazine). (The MCE for the HPM shall not exceed 60,000 lbs [27,215 kg].)

C9.3.1.2. The bases for subdividing a quantity of AE into smaller units for the purpose of QD reduction are provided below.

C9.3.1.2.1. Separation By Time. When two or more stacks of equal NEWQD detonate within short time intervals, the blast waves will coalesce. A short time interval is

defined as a time in milliseconds that is less than $4.0W^{1/3}$ [$5.21Q^{1/3}$] of any one stack in lbs [kg] for lateral (side-to-side) target positions and less than $5.6W^{1/3}$ [$7.29Q^{1/3}$] of any one stack in lbs [kg] for axial target positions. (In the preceding formulas, the unit for the constant is milliseconds/$lbs^{1/3}$ [milliseconds/$kg^{1/3}$].) The combined shock wave, after coalescence, will be that of a single detonation of a charge equal to the summation of the several stacks. When coalescence does not occur, the MCE for the stacks is equal to the NEWQD for one stack.

C9.3.1.2.2. Separation By Barriers. Barriers designed per the principles of Reference (j) shall ensure no propagation between AE stacks. When barriers are constructed per this guidance or when supported by test data, the MCE is equal to the NEWQD of the AE stack with the largest QD requirement. Otherwise, QD computations must be based upon the summation of NEWQD for all of the AE stacks. (Barrier design shall include adequate standoff distances and take into account acceptor AE sensitivity.)

C9.3.1.3. The QD criteria for a PES-ES pair, when both contain AE, are determined by considering each location, in turn, as a PES and an ES. The quantity of AE to be permitted in each PES shall be the amount permitted by the distance specified in the appropriate QD tables. The separation distance required for the pair is the greater of the two separation distances. An exception is permitted for service magazines supporting an AE operation.

C9.3.1.4. Flight ranges for units (e.g., rockets, missile motors, and Cartridge or Propellant Actuated Devices (CAD/PAD)) in a propulsive state shall be disregarded because it is impractical to specify QD separations that allow for their designed flight range.

C9.3.1.5. Separation distances are measured along straight lines. For large intervening topographical features such as hills, measure over or around the feature, whichever is shorter. For golf courses, measure to the nearest edge of the tee or green or to the centerline of fairways.

C9.3.1.6. Measurements of distance for determining the maximum allowable quantity of AE shall be made to the nearest part of an ES from:

C9.3.1.6.1. The nearest wall of the PES.

C9.3.1.6.2. The exterior of the nearest intervening wall to the controlling AE stack, when the PES is subdivided.

C9.3.1.7. When an AE conveyance (e.g., railroad car or motor vehicle) containing AE is not separated from a PES in such a manner as to prevent mass detonation, then the conveyance and PES shall be considered as a unit and their NEWQD shall be summed. The separation distance shall be measured from the nearest outside wall of the PES or conveyance, as appropriate, to an ES. If the AE are separated so that mass detonation will not occur, the separation distance shall be measured from the nearest controlling PES or conveyance to an ES.

C9.4. QD CRITERIA FOR ACCIDENTAL DETONATIONS

C9.4.1. HD 1.1.

C9.4.1.1. Permissible Exposures To Airblast Overpressure.

C9.4.1.1.1. 12 psi [82.7 kPa] at $9W^{1/3}$ [$3.57Q^{1/3}$]. (Barricading is required.)

C9.4.1.1.1.1. Buildings that house:

C9.4.1.1.1.1.1. Successive steps of a single production, renovation, or maintenance operation.

C9.4.1.1.1.1.2. A security alert force.

C9.4.1.1.1.1.3. A tactical missile site, where greater distances from the PES cannot be provided for technical or tactical reasons.

C9.4.1.1.1.1.4. Break rooms and change houses that are both part of an operating line and used exclusively by personnel operating the line. An exception is when the break room is integral to the PES and used only by personnel from that PES. For this situation, no QD applies.

C9.4.1.1.1.1.5. Dunnage preparation or similar non-AE operations, if used only by personnel employed at the PES.

C9.4.1.1.1.1.6. Temporary holding areas for AE conveyances servicing production or maintenance facilities.

C9.4.1.1.1.1.7. AE-related operations in magazine areas, when performing minor maintenance, preservation, packaging, or surveillance inspection.

C9.4.1.1.1.1.8. Barricaded service magazines that are part of an operating line. Separation distances shall be based on the NEWQD and the HD of the AE in the magazine and not that in other parts of the operating line.

C9.4.1.1.1.2. Exceptions

C9.4.1.1.1.2.1. Unmanned auxiliary utility facilities (e.g., transformer stations, water treatment and pollution abatement facilities) that serve, but are not an integral function in the PES, and that would not create an immediate secondary hazard if lost. Such unmanned facilities need not be barricaded. See subparagraph C9.8.1.2. for situations where auxiliary facilities serving only one PES or AE operation are permitted to be separated from the facility or operation they support based on fire separation distance only.

C9.4.1.1.1.2.2. Unmanned auxiliary power generation or conversion facilities that exclusively supply power to an AE storage area or security fence lighting may be located at

fire protection distance (50 ft [15.2 m] for non-combustible structures, 100 ft [30.5 m] for combustible structures) from AE facilities.

C9.4.1.1.2. 3.5 psi [24 kPa] at $18W^{1/3}$ [$7.14Q^{1/3}$].

C9.4.1.1.2.1. Facilities that house:

C9.4.1.1.2.1.1. Labor-intensive AE operations (e.g., surveillance, maintenance, inspection) closely related to the PES.

C9.4.1.1.2.1.2. Buildings, excluding magazine-area loading docks, for comfort, safety, or convenience (e.g., lunchrooms, motor pools, area offices, auxiliary fire stations, transportation dispatch points, and shipping and receiving buildings) that are used exclusively in support of the PES.

C9.4.1.1.2.1.3. Parallel operating lines, whether or not barricaded, provided the AE involved in each operating line present similar hazards. (The criticality or survivability of one or more of the operating lines may require that each line be given IBD-level protection.)

C9.4.1.1.2.1.4. Operational support buildings (e.g., day rooms, operation offices, and similar functions) that only personnel from the activity operating the PES use or attend.

C9.4.1.1.2.1.5. Training functions (e.g., classroom and field training of personnel who may be required to engage in AE work) that only personnel from the activity operating the PES use or attend. (Maneuver areas, proving ground tracks, and similar facilities for armored vehicles also may be exposed to 3.5 psi [24 kPa] because the vehicles provide adequate protection to the operators from fragments and debris.)

C9.4.1.1.2.1.6. Maintenance of military vehicles or equipment that are located outside the United States (U.S.), when the PES is a basic load or a ready storage area. In such cases:

C9.4.1.1.2.1.6.1. The NEWQD at each PES is limited to 8,818 lbs [4,000 kg] or less.

C9.4.1.1.2.1.6.2. The maintenance work must be performed exclusively for the unit for which the basic load of AE is stored.

C9.4.1.1.2.1.7. Auxiliary power and utilities functions including auxiliary power plants; compressor stations; electric power transformers; tool and consumable supplies storage and issue; and handling equipment service, battery charging, and minor repair.

C9.4.1.1.2.1.7.1. When such facilities serve an entire naval station or base complex, or when loss of the facility shall cause an immediate loss of vital function, the minimum exposure level shall be IBD ($40\text{-}50W^{1/3}$ [$15.87\text{-}19.84Q^{1/3}$]).

C9.4.1.1.2.1.7.2. Naval station "cold-iron" ship support facilities (e.g., supply and mechanical support) are excluded from QD criteria when they are not continuously manned; when they are serving only the waterfront area; and when the PES is a ship or AE handling location on the waterfront.

C9.4.1.1.2.1.8. Minimum distance between separate groups of AE-loaded, combat-configured aircraft or between aircraft and a pre-load or "quick-turn" site that serves to arm an aircraft. The use of intervening barricades is required to eliminate propagation by primary fragment impact; thereby eliminating the need to total NEWQD. (Loading AE aboard aircraft can be accomplished with each group of aircraft without additional protection.)

C9.4.1.1.2.1.9. Unbarricaded service magazine separation distances shall be based on the NEWQD and the HD of the AE in the magazine and not that in other parts of the operating line.

C9.4.1.1.2.1.10. Container stuffing and unstuffing operations that provide routine support to a PES and apply only to main support functions that are set aside for support of ship-loading, depot, or manufacturing operations. When in connection with ship-loading and unloading and the ES is an AE ship, the quantity at the container site governs. (NOTE: Container stuffing and unstuffing in a magazine area are permitted at IMD IAW Table C9.T6.) Criteria applicable to the loading and unloading of a conveyance at a magazine are addressed in paragraph C9.8.20.

C9.4.1.1.2.1.11. <u>Combat Aircraft Support Facilities</u>

C9.4.1.1.2.1.11.1. Between AE-loaded combat aircraft and those non-AE facilities that directly support the servicing and launching of a unit's armed aircraft. Such facilities include operating facilities that handle AE on the flightline, prepare and service armed aircraft, and those that house personnel who fly combat aircraft.

C9.4.1.1.2.1.11.2. Direct flightline combat aircraft associated facilities, which may contain field offices, break rooms, unit training rooms, and equipment and supply rooms, as well as Petroleum, Oils, Lubricants (POL) hydrant facilities and civil engineer fire protection stations. (Morale, Welfare, and Recreation (MWR) facilities; base civil engineering headquarters; and industrial facilities, including central base supply, are required to be at IBD.)

C9.4.1.1.2.1.12. Parking lots for Privately Owned Vehicles (POV) belonging to personnel employed at or stationed at multiple PES. When a POV parking lot supports a single PES, it may be separated at less than ILD only from its associated facility; however, a minimum distance of 100 ft [30.5 m] is required to the PES it supports, to protect the PES from vehicle fires. Access for emergency vehicles must be provided.

C9.4.1.1.2.2. Exposures indicated in this section that are provided blast suppression and structure hardening so that comparable protection levels for personnel and equipment as provided by $18W^{1/3}$ [$7.14Q^{1/3}$] may be sited at $9W^{1/3}$ [$3.57Q^{1/3}$].

C9.4.1.1.3. 2.3 psi [15.8 kPa] at $24W^{1/3}$ [$9.52Q^{1/3}$]. Personnel exposed to remotely controlled operations.

C9.4.1.1.4. 2.3-1.7 psi [15.8-11.7 kPa] at $24\text{-}30W^{1/3}$ [$9.52\text{-}11.9Q^{1/3}$].

C9.4.1.1.4.1. PTRD with medium and low traffic densities as described in subparagraph C9.4.1.2.1.1.5.

C9.4.1.1.4.2. On-base roads. The DoD Components may provide protection less than 60 percent of IBD to installation-related personnel transiting QD arcs, when the risks are evaluated, are documented, and are IAW DoD Component-established procedures. (Effective October 1, 2000, all new construction of AE storage and operating facilities, and any change in operations within existing facilities that increases the explosive safety risk should provide both the general public and installation-related personnel who are not involved in munitions-related operations protection that provides a minimum of 60 percent of IBD.) When a DoD Component determines exposures at less than 60 percent of IBD to be necessary, the DoD Component should consider use of methods to inform transients of potential risks (e.g., written acknowledgement of the risk by vendors or others with a recurring need to transit the ESQD area, warning signs, flashing lights, physical barriers). The DoD Component's decision to provide transients' protection at less than 60 percent of IBD shall be:

C9.4.1.1.4.2.1. Supported by a qualitative risk assessment considering factors such as:

C9.4.1.1.4.2.1.1. Operational necessity.

C9.4.1.1.4.2.1.2. The operation being performed (e.g., static storage, maintenance, and production).

C9.4.1.1.4.2.1.3. Operational activity cycles.

C9.4.1.1.4.2.1.4. Alternate routes.

C9.4.1.1.4.2.1.5. Traffic density.

C9.4.1.1.4.2.1.6. Accident records.

C9.4.1.1.4.2.1.7. Time interval of exposure.

C9.4.1.1.4.2.1.8. Type and quantity of AE in proximity to the area transited.

C9.4.1.1.4.2.1.9. The closest distance from the area transited to the PES.

C9.4.1.1.4.2.1.10. The need for installation-related personnel to transit the ESQD arc.

C9.4.1.1.4.2.2. Reviewed as changes occur to either operations, which would increase the explosive safety risk, or the number of exposed, and upon change of the approving authority.

C9.4.1.1.4.3. Open-air recreation facilities (e.g., ball diamonds, golf courses, and volleyball courts), which do not contain structures, used for MWR and community relations' purposes at military installations and activities. As an exception, neither blast nor fragment criteria apply, when such facilities are located near AE support operations and used by off-duty military or on-duty military or DoD civilians or contractors (e.g., munitions workers, security guards, firefighters) who directly support these AE operations. However, when possible, such facilities should fully comply with this Standard.

C9.4.1.1.4.4. Training areas (e.g., observation points, classrooms or other instruction areas for ranges, and similar fixed facilities designed for occasional use coincident with the use of the range). As an exception, to allow for realism in training, this separation does not apply to AE needed for any particular exercise or on-the-job training. However, this separation or equivalent protection is required from permanent PES and AE supply points.

C9.4.1.1.4.5. Open-air aircraft passenger loading and unloading areas.

C9.4.1.1.4.6. Parking lots for administrative areas. (Minimum fragment distances apply, see subparagraph C9.4.1.2.)

C9.4.1.1.4.7. Inert storage located in the open (no structures involved) when not directly related to the explosives mission and when accessed by personnel not directly related to the explosives mission. (See subparagraph C9.4.1.1.6.9. if located within a structure.)

C9.4.1.1.5. 1.7 psi [11.7 kPa] at $30W^{1/3}$ [$11.9Q^{1/3}$]. Combat aircraft parking areas exposed to AE storage and operating facilities.

C9.4.1.1.6. 1.2 - 0.90 psi [8.3 - 6.2 kPa] at 40 - $50W^{1/3}$ [15.87 - $19.84Q^{1/3}$].

C9.4.1.1.6.1. Inhabited buildings, administrative and housing areas.

C9.4.1.1.6.2. An installation boundary, unless the area outside the boundary naturally prohibits access, is government land that is not open to the public, or access is restricted and controlled by other means. When IBD QD arcs penetrate an installation's boundary, the Service shall certify IBD protection does not apply to the encumbered area and shall establish procedures to monitor the area for any change in status.

C9.4.1.1.6.3. Recreation facilities (e.g., ball diamonds, golf courses, and volleyball courts) that contain structures.

C9.4.1.1.6.4. Flight-line passenger service functions (e.g., terminal buildings).

C9.4.1.1.6.5. Main powerhouses that provide vital utilities to a major portion of an installation.

C9.4.1.1.6.6. Shops that by reason of their vital strategic nature, or high intrinsic value of their contents, should not be placed at risk.

C9.4.1.1.6.7. Functions that, if momentarily put out of action, would cause an immediate secondary hazard by reason of their failure to function.

C9.4.1.1.6.8. PTRD with high traffic density as described in subparagraph C9.4.1.2.1.1.5.

C9.4.1.1.6.9. Inert storage located in a structure when not directly related to the explosives mission and when accessed by personnel not directly related to the explosives mission. (See subparagraph C9.4.1.1.4.7. if no structure is involved.)

C9.4.1.2. Minimum Fragment Distances

C9.4.1.2.1. The minimum distance for protection from hazardous fragments shall be based on primary and secondary fragments from the PES and the population or traffic density of the ES. It is defined as the distance at which the density of hazardous fragments becomes 1 per 600 ft^2 [55.7 m^2]. (This distance is not the maximum fragment range.) DDESB-approved analyses and/or approved tests may be used to determine minimum distances for both primary and secondary fragments. DDESB TP No. 13 (Reference (o)) is an example of a method to determine minimal distances for building debris, while DDESB TP No. 16 (Reference (p)) provides similar information to determine minimal distances for primary fragments. In the absence of appropriate analyses or tests, default hazardous debris distances apply:

C9.4.1.2.1.1. For populous locations provided IBD protection, the minimum distance shall be the Hazardous Fragment Distance (HFD). If this distance is not known, the following shall apply:

C9.4.1.2.1.1.1. For all types of Hazard Division 1.1 in quantities $\leq$ 450 lbs NEWQD [204 kg], the HFD shall be determined as follows (NOTE: PTRD is 60 percent of the specified HFD):

C9.4.1.2.1.1.1.1. For Hazard Division 1.1 in a 7-Bar or a 3-Bar ECM, use "Earth-Covered Magazine" distances shown in Table C9.T1., as discussed in subparagraph C9.4.1.3. ILD shall be IAW subparagraph C9.4.1.4.1.

C9.4.1.2.1.1.1.2. For Hazard Division 1.1 in an Undefined ECM, where the loading density = NEWQD (lbs)/internal volume (ft^3) [English EQN C9.4-1] is $\leq$ 0.028 lbs/ft^3 [loading density = NEWQD/internal volume (m^3) [Metric EQN C9.4-2] is $\leq$ 0.449 kg/m^3]

use "Earth-Covered Magazine" distances shown in Table C9.T1., as discussed in subparagraph C9.4.1.3. ILD shall be IAW subparagraph C9.4.1.4.1.

C9.4.1.2.1.1.1.3. For Hazard Division 1.1 in an Undefined ECM where the loading density is > 0.028 lbs/ft^3 [> 0.449 kg/m^3], use "Earth-Covered Magazine - side and rear" distances of Table C9.T1. and for front exposure, apply the greater of "Earth-Covered Magazine – front" IBD distance of Table C9.T1. or the HFD from the "STRUCTURE" column of Table C9.T2., for the NEW in the ECM. ILD shall be IAW subparagraph C9.4.1.4.1.

C9.4.1.2.1.1.1.4. Where ECM, regardless of structural designation, have been designed, analyzed, or tested to have a reduced IBD and have been approved by the DDESB, use the approved IBD. ILD shall be IAW subparagraph C9.4.1.4.1.

C9.4.1.2.1.1.1.5. For Hazard Division 1.1 in a structure (excluding ECM) capable of stopping primary fragments, but which can contribute to the debris hazard, use hazardous debris and PTRD distances found in Table C9.T10. ILD shall be IAW subparagraph C9.4.1.4. Structures that are capable of stopping primary fragments include all Heavy Wall (H) and Heavy Wall/Roof (H/R) AGS, as defined in the legend for Table C9.T8. Doors and other openings through which primary fragments could exit must be capable of stopping primary fragments from exiting the facility or shall be barricaded IAW section C5.3. to trap primary fragments that could exit the facility.

C9.4.1.2.1.1.1.6. For Hazard Division 1.1 in the open or in a structure incapable of stopping primary fragments, use HFD listed in the "OPEN" column of Table C9.T2. ILD shall be IAW subparagraph C9.4.1.4. Structures (other than ECM) that are capable of stopping primary fragments include all H and H/R AGS, as defined in the legend for Table C9.T8. All other structures (other than ECM) are considered incapable of stopping primary fragments.

C9.4.1.2.1.1.1.7. Selected items have been evaluated for minimum HFD with results shown in Table C9.T3. Other items, through testing, have been hazard classified with a specific HFD presented in the format HD (xx)1.1. The HFD for these items is specified in hundreds of feet (in parenthesis), and they may not be listed in Table C9.T3. The distances for these two categories of select items apply only to items in the open. When in facilities, secondary debris as well as primary fragments must be considered. If in a facility that can contain primary fragments, apply criteria of subparagraphs C9.4.1.2.1.1.1.1. through C9.4.1.2.1.1.1.5. If in a facility that cannot stop primary fragments, use the greater distance from Table C9.T3. (for the item being considered) or the HFD associated with the (xx)(1.1) item or from Table C9.T2. for determining the applicable HFD. ILD shall be IAW subparagraph C9.4.1.4.

C9.4.1.2.1.1.1.8. For bare explosives in the open, distance is computed by the formula $d=40W^{1/3}$ [$15.87Q^{1/3}$]. [English EQN C9.4-3] [Metric EQN C9.4-4]

C9.4.1.2.1.1.2. For Hazard Division 1.1 NEWQDs in the range 451 to 30,000 lbs [205 to 13,608 kg], HFD shall be determined according to the below criteria. PTRD is 60 percent of the specified HFD, and ILD shall be IAW subparagraph C9.4.1.4.

C9.4.1.2.1.1.2.1. The minimum HFD shall be 1,250 ft [381 m], as shown in Table C9.T1. Lesser distances are permitted if supported by a structural analysis. Facilities sited at 1,235 ft [376 m] or 1,245 ft [380 m] per past standards shall be considered to be in compliance with the 1,250 ft [381 m] minimum requirement.

C9.4.1.2.1.1.2.2. For Hazard Division 1.1 in a 7-Bar or a 3-Bar ECM, use "Earth-Covered Magazine" distances shown in Table C9.T1., as discussed in subparagraph C9.4.1.3.

C9.4.1.2.1.1.2.3. For Hazard Division 1.1 in an Undefined ECM, where the loading density is $\leq$ 0.028 lbs/ft^3 [$\leq$ 0.449 kg/m^3], use "Earth-Covered Magazine" distances shown in Table C9.T1., as discussed in subparagraph C9.4.1.3.

C9.4.1.2.1.1.2.4. For Hazard Division 1.1 in an Undefined ECM with minimum internal dimensions of 26 ft [7.92 m] wide and 60 ft [18.29 m] long, use "Earth-Covered Magazine - side and rear" distances of Table C9.T1. and "Other PES" distance of Table C9.T1. for the front exposure.

C9.4.1.2.1.1.2.5. For Hazard Division 1.1 in an Undefined ECM where the loading density is > 0.028 lbs/ft^3 [> 0.449 kg/m^3] and internal dimensions are less than 26 ft [7.92 m] wide and 60 ft [18.29 m] long, use "Other PES" distances of Table C9.T1. for front, side, and rear exposures.

C9.4.1.2.1.1.2.6. Selected items have been evaluated for minimum HFD with results shown in Table C9.T3. Other items, through testing, have been hazard classified with a specific HFD presented in the format HD (xx)1.1. The HFD for these items is specified in hundreds of feet (in parenthesis), and they may not be listed in Table C9.T3. The distances for these two categories of select items apply only to items in the open. When these items are placed in a facility, apply the criteria of subparagraphs C9.4.1.2.1.1.2.1. through C9.4.1.2.1.1.2.5. as appropriate.

C9.4.1.2.1.1.2.7. For bare explosives in the open, distance is computed by the formula $d=40W^{1/3}$ [$15.87Q^{1/3}$]. [English EQN C9.4-3] [Metric EQN C9.4-4]

C9.4.1.2.1.1.3. For Hazard Division 1.1 NEWQDs > 30,000 lbs [13,608 kg] HFD will be in accordance with Table C9.T1. Lesser distances are permitted if supported by a structural analysis. PTRD is 60 percent of HFD and intraline criteria will be in accordance with subparagraph C9.4.1.4. The following apply to use of the reduced "Earth-Covered Magazine" distances shown in Table C9.T1., for the NEW range between 30,000 lbs [13,608 kg] and 250,000 lbs [113,398 kg]

Table C9.T1. HD 1.1 IBD and PTRD

NEWQD	IBD From:				PTRD From:			
	ECM			Other	ECM			Other
	Front[1,2]	Side[1]	Rear[3]	PES[4]	Front[5,6]	Side[5]	Rear[5]	PES[5]
(lbs)	(ft)	(ft)	(ft)	(ft)	(ft)	(ft)	(ft)	(ft)
[kg]	*[m]*	*[m]*	*[m]*	*[m]*	*[m]*	*[m]*	*[m]*	*[m]*
1	500	250	250	NOTE 4	300	150	150	NOTE 5
0.45	*152.4*	*76.2*	*76.2*		*91.4*	*45.7*	*45.7*	
1.5	500	250	250		300	150	150	
0.68	*152.4*	*76.2*	*76.2*		*91.4*	*45.7*	*45.7*	
2	500	250	250		300	150	150	
0.91	*152.4*	*76.2*	*76.2*		*91.4*	*45.7*	*45.7*	
3	500	250	250		300	150	150	
1.4	*152.4*	*76.2*	*76.2*		*91.4*	*45.7*	*45.7*	
5	500	250	250		300	150	150	
2.3	*152.4*	*76.2*	*76.2*		*91.4*	*45.7*	*45.7*	
7	500	250	250		300	150	150	
3.2	*152.4*	*76.2*	*76.2*		*91.4*	*45.7*	*45.7*	
10	500	250	250		300	150	150	
4.5	*152.4*	*76.2*	*76.2*		*91.4*	*45.7*	*45.7*	
15	500	250	250		300	150	150	
6.8	*152.4*	*76.2*	*76.2*		*91.4*	*45.7*	*45.7*	
20	500	250	250		300	150	150	
9.1	*152.4*	*76.2*	*76.2*		*91.4*	*45.7*	*45.7*	
30	500	250	250		300	150	150	
13.6	*152.4*	*76.2*	*76.2*		*91.4*	*45.7*	*45.7*	
50	500	250	250		300	150	150	
22.7	*152.4*	*76.2*	*76.2*		*91.4*	*45.7*	*45.7*	
70	500	250	250		300	150	150	
31.8	*152.4*	*76.2*	*76.2*		*91.4*	*45.7*	*45.7*	
100	500	250	250		300	150	150	
45.4	*152.4*	*76.2*	*76.2*		*91.4*	*45.7*	*45.7*	
150	500	250	250		300	150	150	
68.0	*152.4*	*76.2*	*76.2*		*91.4*	*45.7*	*45.7*	
200	700	250	250		420	150	150	
90.7	*213.6*	*76.2*	*76.2*		*91.4*	*45.7*	*45.7*	
300	700	250	250		420	150	150	
136.1	*213.6*	*76.2*	*76.2*		*128.0*	*45.7*	*45.7*	
450	700	250	250		420	150	150	
204.1	*213.6*	*76.2*	*76.2*	▼	*128.0*	*45.7*	*45.7*	▼
500	1,250	1,250	1,250	1,250	750	750	750	750
226.8	*381.0*	*381.0*	*381.0*	*381.0*	*228.6*	*228.6*	*228.6*	*228.6*
700	1,250	1,250	1,250	1,250	750	750	750	750
317.5	*381.0*	*381.0*	*381.0*	*381.0*	*228.6*	*228.6*	*228.6*	*228.6*
1,000	1,250	1,250	1,250	1,250	750	750	750	750
453.6	*381.0*	*381.0*	*381.0*	*381.0*	*228.6*	*228.6*	*228.6*	*228.6*

Table C9.T1. HD 1.1 IBD and PTRD (continued)

NEWQD	IBD From:				PTRD From:			
	ECM			Other	ECM			Other
	Front[1,2]	Side[1]	Rear[3]	PES[4]	Front[5,6]	Side[5]	Rear[5]	PES[5]
(lbs)	(ft)	(ft)	(ft)	(ft)	(ft)	(ft)	(ft)	(ft)
[kg]	*[m]*	*[m]*	*[m]*	*[m]*	*[m]*	*[m]*	*[m]*	*[m]*
1,500	1,250	1,250	1,250	1,250	750	750	750	750
680.4	*381.0*	*381.0*	*381.0*	*381.0*	*228.6*	*228.6*	*228.6*	*228.6*
2,000	1,250	1,250	1,250	1,250	750	750	750	750
907.2	*381.0*	*381.0*	*381.0*	*381.0*	*228.6*	*228.6*	*228.6*	*228.6*
3,000	1,250	1,250	1,250	1,250	750	750	750	750
1,360.8	*381.0*	*381.0*	*381.0*	*381.0*	*228.6*	*228.6*	*228.6*	*228.6*
5,000	1,250	1,250	1,250	1,250	750	750	750	750
2,268.0	*381.0*	*381.0*	*381.0*	*381.0*	*228.6*	*228.6*	*228.6*	*228.6*
7,000	1,250	1,250	1,250	1,250	750	750	750	750
3,175.1	*381.0*	*381.0*	*381.0*	*381.0*	*228.6*	*228.6*	*228.6*	*228.6*
10,000	1,250	1,250	1,250	1,250	750	750	750	750
4,535.9	*381.0*	*381.0*	*381.0*	*381.0*	*228.6*	*228.6*	*228.6*	*228.6*
15,000	1,250	1,250	1,250	1,250	750	750	750	750
6,803.9	*381.0*	*381.0*	*381.0*	*381.0*	*228.6*	*228.6*	*228.6*	*228.6*
20,000	1,250	1,250	1,250	1,250	750	750	750	750
9,071.8	*381.0*	*381.0*	*381.0*	*381.0*	*228.6*	*228.6*	*228.6*	*228.6*
30,000	1,250	1,250	1,250	1,250	750	750	750	750
13,607.7	*381.0*	*381.0*	*381.0*	*381.0*	*228.6*	*228.6*	*228.6*	*228.6*
45,000	1,250	1,250	1,250	1,423	750	750	750	854
20,411.6	*381.0*	*381.0*	*381.0*	*433.7*	*228.6*	*228.6*	*228.6*	*260.3*
50,000	1,289	1,289	1,250	1,474	774	774	750	884
22,679.5	*392.9*	*392.9*	*381.0*	*448.9*	*235.7*	*235.7*	*228.6*	*269.4*
70,000	1,442	1,442	1,250	1,649	865	865	750	989
31,751.3	*439.5*	*439.5*	*381.0*	*502.2*	*263.7*	*263.7*	*228.6*	*301.3*
100,000	1,625	1,625	1,250	1,857	975	975	750	1,114
45,359.0	*495.0*	*495.0*	*381.0*	*565.6*	*297.0*	*297.0*	*228.6*	*339.4*
150,000	2,177	2,177	1,804	2,346	1,306	1,306	1,083	1,408
68,038.5	*663.5*	*663.5*	*550.0*	*715.2*	*398.1*	*398.1*	*330.0*	*429.1*
200,000	2,680	2,680	2,469	2,770	1,608	1,608	1,481	1,662
90,718.0	*816.8*	*816.8*	*752.5*	*844.4*	*490.1*	*490.1*	*451.5*	*506.6*
250,000	3,149	3,149	3,149	3,151	1,889	1,889	1,889	1,891
113,397.5	*959.8*	*959.8*	*959.8*	*960.4*	*575.9*	*575.9*	*575.9*	*576.2*
300,000	3,347	3,347	3,347	3,347	2,008	2,008	2,008	2,008
136,077.0	*1,020.5*	*1,020.5*	*1,020.5*	*1,020.5*	*612.3*	*612.3*	*612.3*	*612.3*
500,000	3,969	3,969	3,969	3,969	2,381	2,381	2,381	2,381
226,795.0	*1,209.9*	*1,209.9*	*1,209.9*	*1,209.9*	*725.9*	*725.9*	*725.9*	*725.9*

Notes for Table C9.T1. (see subparagraph C9.4.1.2.1.1.):

1. For NEWQD < 45,000 lbs [20,412 kg], the distance is controlled by fragments. When fragments are absent or if the HFD (1/600 ft^2 [1/55.7 m^2]) is less than the blast hazard range, then the blast criteria in this note may be used.

   (NEWQD in lbs, d in ft)

   NEWQD $\leq$ 45,000 lbs: $d = 35NEWQD^{1/3}$ [English EQN C9.T1-1]

   45,000 lbs < NEWQD $\leq$ 100,000 lbs: $d = 35NEWQD^{1/3}$ [English EQN C9.T1-2]

   100,000 lbs < NEWQD $\leq$ 250,000 lbs: $d = 0.3955NEWQD^{0.7227}$ [English EQN C9.T1-3]

   250,000 lbs < NEWQD: $d = 50NEWQD^{1/3}$ [English EQN C9.T1-4]

   (NEWQD in kg, d in m)

NEWQD $\leq$ 20,412 kg:	$d = 13.88NEWQD^{1/3}$	[Metric EQN C9.T1-5]
20,412 kg < NEWQD $\leq$ 45,359 kg:	$d = 13.88NEWQD^{1/3}$	[Metric EQN C9.T1-6]
45,359 kg < NEWQD $\leq$ 113,398 kg:	$d = 0.2134NEWQD^{0.7227}$	[Metric EQN C9.T1-7]
113,398 kg < NEWQD:	$d = 19.84NEWQD^{1/3}$	[Metric EQN C9.T1-8]
(d in ft, NEWQD in lbs)		
d $\leq$ 1,245 ft:	$NEWQD = d^3/42{,}875$	[English EQN C9.T1-9]
1,245 ft < d $\leq$ 1,625 ft:	$NEWQD = d^3/42{,}875$	[English EQN C9.T1-10]
1,625 ft < d $\leq$ 3,150 ft:	$NEWQD = 3.60935d^{1.3837}$	[English EQN C9.T1-11]
3,150 ft < d:	$NEWQD = d^3/125{,}000$	[English EQN C9.T1-12]
(d in m, NEWQD in kg)		
d $\leq$ 379.3 m:	$NEWQD = d^3/2{,}674.04$	[Metric EQN C9.T1-13]
379.3 m < d $\leq$ 495.0 :	$NEWQD = d^3/2{,}674.04$	[Metric EQN C9.T1-14]
495.0 m < d $\leq$ 960.3 m:	$NEWQD = 8.4761d^{1.3837}$	[Metric EQN C9.T1-15]
960.3 m < d:	$NEWQD = d^3/7{,}809.53$	[Metric EQN C9.T1-16]

2. IBD for frontal exposures applies to all directions from HPM. The MCE in the HPM is used as the NEWQD. The limit on the design MCE in an HPM is 60,000 lbs [27,215 kg].
3. For NEWQD < 100,000 lbs [45,359 kg], the distance is controlled by fragments and debris. When fragments and debris are absent or the range to a hazardous debris density of 1/600 ft^2 [1/55.7 m^2] is less than the blast hazard range, then the blast criteria may be used.

(NEWQD in lbs, d in ft)		
NEWQD $\leq$ 100,000 lbs:	$d = 25NEWQD^{1/3}$	[English EQN C9.T1-17]
100,000 lbs < NEWQD $\leq$ 250,000 lbs:	$d = 0.004125NEWQD^{1.0898}$	[English EQN C9.T1-18]
250,000 lbs < NEWQD:	$d = 50NEWQD^{1/3}$	[English EQN C9.T1-19]
(NEWQD in kg, d in m)		
NEWQD $\leq$ 45,359 kg:	$d = 9.92NEWQD^{1/3}$	[Metric EQN C9.T1-20]
45,359 kg < NEWQD $\leq$ 113,398 kg:	$d = 0.002976NEWQD^{1.0898}$	[Metric EQN C9.T1-21]
113,398 kg < NEWQD:	$d = 19.84*NEWQD^{1/3}$	[Metric EQN C9.T1-22]
(d in ft, NEWQD in lbs)		
d $\leq$ 1,160 ft:	$NEWQD = d^3/15{,}625$	[English EQN C9.T1-23]
1,160 ft < d $\leq$ 3,150 ft:	$NEWQD = 154.2006d^{0.91760}$	[English EQN C9.T1-24]
3,150 ft < d:	$NEWQD = d^3/125{,}000$	[English EQN C9.T1-25]
(d in m, NEWQD in kg)		
d $\leq$ 353.8 m:	$NEWQD = d^3/976.19$	[Metric EQN C9.T1-26]
353.8 m < d $\leq$ 960.3 m:	$NEWQD = 208.0623d^{0.91760}$	[Metric EQN C9.T1-27]
960.3 m < d:	$NEWQD = d^3/7{,}809.53$	[Metric EQN C9.T1-28]

4. For NEWQD < 30,000 lbs [< 13,608 kg], the distance is controlled by fragments and debris. Lesser distances may be permitted for certain situations (see subparagraph C9.4.1.2.1.1.).

(NEWQD in lbs, d in ft)		
30,000 lbs < NEWQD $\leq$ 100,000 lbs:	$d = 40NEWQD^{1/3}$	[English EQN C9.T1-29]
100,000 lbs < NEWQD $\leq$ 250,000 lbs:	$d = 2.42NEWQD^{0.577}$	[English EQN C9.T1-30]
250,000 lbs < NEWQD:	$d = 50NEWQD^{1/3}$	[English EQN C9.T1-31]
(NEWQD in kg, d in m)		
13,608 kg < NEWQD $\leq$ 45,359 kg:	$d = 15.87NEWQD^{1/3}$	[Metric EQN C9.T1-32]
45,359 kg < NEWQD $\leq$ 113,398 kg:	$d = 1.1640NEWQD^{0.577}$	[Metric EQN C9.T1-33]
113,398 kg < NEWQD:	$d = 19.84NEWQD^{1/3}$	[Metric EQN C9.T1-34]
(d in ft, NEWQD in lbs)		
1,243 ft < d $\leq$ 1,857 ft:	$NEWQD = d^3/64{,}000$	[English EQN C9.T1-35]
1,857 ft < d $\leq$ 3,150 ft:	$NEWQD = 0.2162d^{1.7331}$	[English EQN C9.T1-36]
3,150 ft < d:	$NEWQD = d^3/125{,}000$	[English EQN C9.T1-37]
(d in m, NEWQD in kg)		
378.6 m < d $\leq$ 565.6 m:	$NEWQD = d^3/3{,}989.42$	[Metric EQN C9.T1-38]
565.6 m < d $\leq$ 960.3 m:	$NEWQD = 0.7686d^{1.7331}$	[Metric EQN C9.T1-39]
960.3 m < d:	$NEWQD = d^3/7{,}809.53$	[Metric EQN C9.T1-40]

5. Computed as 60 percent of applicable IBD.
6. PTRD applies to all directions from HPM. The MCE in the HPM is used as the NEWQD.

Table C9.T2. HD 1.1 HFD

NEWQD (lbs) *[kg]*	**OPEN (ft)** *[m]*	**STRUCTURE (ft)** *[m]*
≤ 0.5	236	200
≤ 0.23	*71.9*	*61.0*
0.7	263	200
0.3	*80.2*	*61.0*
1	291	200
0.45	*88.8*	*61.0*
2	346	200
0.91	*105.5*	*61.0*
3	378	200
1.4	*115.3*	*61.0*
5	419	200
2.3	*127.7*	*61.0*
7	445	200
3.2	*135.6*	*61.0*
10	474	200
4.5	*144.4*	*61.0*
15	506	200
6.8	*154.2*	*61.0*
20	529	200
9.1	*161.1*	*61.0*
30	561	200
13.6	*170.9*	*61.0*
31	*563.0*	200
14.1	*171.7*	*61.0*
50	601	388
22.7	*183.2*	*118.2*
70	628	519
31.8	*191.3*	*158.1*
100	658	658
45.4	*200.4*	*200.4*
150	815	815
68.0	*248.5*	*248.5*
200	927	927
90.7	*282.6*	*282.6*
300	1085	1085
136.1	*330.6*	*330.6*
450	1243	1243
204.1	*378.7*	*378.7*
> 450	1250	1250
>204.1	*381.0*	*381.0*

Notes for Table C9.T2. (see subparagraph C9.4.1.2.1.1.):

(1) OPEN

NEWQD < 100 lbs: HFD = 291.3 + [79.2 x ln(NEWQD)]; [English EQN C9.T2-1]

NEWQD ≥ 100 lbs: HFD = -1133.9 + [389 x ln(NEWQD)]; [English EQN C9.T2-2]

NEWQD in lbs, HFD in ft, with a minimum distance of 236 ft; ln is natural logarithm.

NEWQD < 45.4 kg: HFD = 107.87 + [24.14 x ln(NEWQD)]; [Metric EQN C9.T2-3]

NEWQD ≥ 45.4 kg: HFD = -251.87 + [118.56 x ln(NEWQD)]; [Metric EQN C9.T2-4]

NEWQD in kg, HFD in m, with a minimum distance of 71.9 m; ln is natural logarithm.

(2) OPEN

HFD < 658 ft; NEWQD = exp [(HFD/79.2) - 3.678]; [English EQN C9.T2-5]

658 ft ≤ HFD < 1250 ft; NEWQD = exp [(HFD/389) + 2.914]; [English EQN C9.T2-6]

NEWQD in lbs, HFD in ft; exp [x] is e^x.

HFD < 200.5 m; NEWQD = exp [(HFD/24.14) – 4.4685]; [Metric EQN C9.T2-7]

200.5 m ≤ HFD < 381 m; NEWQD = exp [(HFD/118.56) + 2.1244]; [Metric EQN C9.T2-8]

NEWQD in kg, HFD in m; exp [x] is e^x.

(3) STRUCTURES

NEWQD ≤ 31 lbs HFD = 200 ft

31 lbs < NEWQD ≤ 450 lbs HFD = -1133.9 + [389 x ln(NEWQD)]; [English EQN C9.T2-9]

NEWQD in lbs, HFD in ft; ln is natural logarithm.

NEWQD ≤ 14.1 kg HFD = 61.0 m

14.1 kg <NEWQD≤ 204.1 kg HFD = -251.87 + [118.56 x ln(NEWQD)]; [Metric EQN C9.T2-10]

NEWQD in kg, HFD in m; ln is natural logarithm.

(4) STRUCTURES

HFD ≤ 200 ft NEWQD ≤ 31 lbs

200 ft < HFD ≤ 1250 ft NEWQD = exp[(HFD/389) + 2.914] [English EQN C9.T2-11]

NEWQD in lbs, HFD in ft, exp [x] is e^x

HFD ≤ 61.0 m NEWQD ≤ 14.1 kg

61.0 m < HFD ≤ 381.0 m NEWQD = exp[(HFD/118.56) + 2.2144] [Metric EQN C9.T2-12]

NEWQD in kg, HFD in m, exp [x] is e^x

(5) Use of equations given in Notes (1) through (4), to determine other HFD-NEWQD combinations, is allowed.

(6) PTRD is 60 percent of HFD.

Table C9.T3. HFD for Open Stacks of Selected HD 1.1 AE

Nomenclature[a]	Number of Units									
	1	**2**	**3**	**4**	**5**	**6**	**7**	**8**	**9**	**10**
Sparrow, AIM-7[b]	280	565	770	955	1120	1245				
	85.3	*172.2*	*234.7*	*291.1*	*341.4*	*379.5*				
Sidewinder, AIM-9	400	400	400	400	400	400	400	400	400	400[1]
	121.9	*121.9*	*121.9*	*121.9*	*121.9*	*121.9*	*121.9*	*121.9*	*121.9*	*121.9*[1]
Chaparral, MIM-72H	400	400	400	400	400	400	400	400	400	400[1]
	121.9	*121.9*	*121.9*	*121.9*	*121.9*	*121.9*	*121.9*	*121.9*	*121.9*	*121.9*[1]
Maverick, AGM 65 A/B/D	400	500	500							
	121.9	*121.9*	*152.4*							
Maverick, AGM 65 E/F/G	670	900[2]	1200[2]							
	204.2	*274.3*[2]	*365.8*[2]							
ASROC	500	500	500							
	152.4	*152.4*	*152.4*							
CBU-87*	800	800	910	945	965	982	1000	1020	1035	1055[3]
	243.8	*243.8*	*277.4*	*288.0*	*291.4*	*299.3*	*304.8*	*310.9*	*315.5*	*321.6*[3]
Improved Hawk	900	900	900	900	900	900	900	900	900	900[1]
	274.3	*274.3*	*274.3*	*274.3*	*274.3*	*274.3*	*274.3*	*274.3*	*274.3*	*274.3*[1]
Penguin*	500	500	500							
	152.4	*152.4*	*152.4*							
Projectile, 105 mm[c]	340	355	525	660	725	775	810	845	870	890[3]
	103.6	*108.2*	*160.0*	*201.2*	*221.0*	*236.2*	*246.9*	*257.6*	*265.2*	*271.3*[3]
Projectile, 155 mm	415	590	770	955	1035	1095	1145	1195	1235	
	126.5	*179.8*	*234.7*	*291.1*	*315.5*	*333.8*	*349.0*	*364.2*	*376.4*	
Projectile, 5"/54	300	375	475	570	680	790	860	925	1005	1085
	91.4	*114.3*	*144.8*	*173.7*	*207.3*	*240.8*	*262.1*	*281.9*	*306.3*	*330.7*
Harpoon*	500	600[4]	600[4]	600[4]						
	152.4	*182.9*[4]	*182.9*[4]	*182.9*[4]						
Tomahawk*	500	600[4]	600[4]	600[4]						
	152.4	*182.9*[4]	*182.9*[4]	*182.9*[4]						
Bomb, 500-pound, MK 82	670									
	204.2									
Bomb, 1000-pound, MK 83	815									
	248.4									
Bomb, 2000-pound, MK 84	925									
	281.9									
Bomb, BLU-109	880									
	268.2									
Bomb, 750-pound, M117	690									
	210.3									
Torpedo, MK 46	500	500	500	500	500	500	500	500		
	152.4	*152.4*	*152.4*	*152.4*	*152.4*	*152.4*	*152.4*	*152.4*		
Torpedo, MK 48[d,e]	630	775	875	925						
(motor vehicles, unshielded)	*192.0*	*236.2*	*266.7*	*281.9*						
Torpedo, MK 48[d,f]	500	500	550	600	635	670	700	725	755	780[3]
	152.4	*152.4*	*167.6*	*182.9*	*193.5*	*204.2*	*213.4*	*221.0*	*230.1*	*237.7*[3]

Notes for Table C9.T3.:

1. Ten units or more until the point is reached at which this distance is exceeded by the distance requirements of Table C9.T1.
2. Use the distance shown only where there are less than 25 unrelated people exposed in any arc encompassing 45 degrees from 900 ft [274 m] to 1250 ft [381 m] from the PES.
3. More than 10 units may be involved before 1250 ft [381 m] is exceeded. For distances involving more than 10 units consult the applicable Service guidance.
4. When handling more than one missile, the missiles must be transported or handled in a nose-to-tail configuration and in their launch capsule or shipping container; furthermore, they must be aligned and/or handled so that each group of two missiles is located outside of the warhead fragment beam spray region of the other two missiles.

General Comments for Table C9.T3.:

(a) Items identified by an asterisk "*" include fragments from shipping or storage container(s). However, all of the HFD in this table may be applied to both packaged and unpackaged configurations.
(b) Those items with WAU-17 warhead.
(c) 105-mm projectiles and 105-mm complete rounds not in standard storage or shipping containers are HD 1.1.
(d) All models, including Advanced Capability (ADCAP).
(e) These distances must be used when handling torpedo(es) from motor vehicles where sandbag (or other equivalent) shielding (as described in Note (f)) is not present between the leading edge of the torpedo(es) warhead and the motor vehicle engine compartment/crew cab to prevent the engine compartment/crew cab from contributing to the debris.
(f) These distances may be used when handling torpedo(es) from:
   (i) Motor vehicles with sandbag (or other equivalent) shielding between the leading edge of the torpedo(es) warhead and the motor vehicle engine compartment/crew cab to prevent the engine compartment/crew cab from contributing to the debris, or
   [NOTE: Sandbag shield requirement is equivalent to a minimum thickness of 2 ft [0.61 m] of sand between the engine compartment/crew cab and the torpedo(es). The sandbags must shield all parts of the engine compartment/crew cab from the torpedo warhead.]
   (ii) Other means of transport such as boats, torpedo transporters, forklifts, or portable cranes.

C9.4.1.2.1.1.3.1. For Hazard Division 1.1 in a 7-Bar or a 3-Bar ECM, where internal dimensions are a minimum of 26 ft [7.92 m] wide and 60 ft [18.29 m] long, use "Earth-Covered Magazine" distances shown in Table C9.T1.

C9.4.1.2.1.1.3.2. For Hazard Division 1.1 in a 7-Bar or a 3-Bar ECM, where internal dimensions are less than 26 ft [7.92 m] wide and 60 ft [18.29 m] long, use "Other PES" distances of Table C9.T1. for front, side, and rear exposures.

C9.4.1.2.1.1.3.3. For Hazard Division 1.1 in an Undefined ECM, where internal dimensions are a minimum of 26 ft [7.92 m] wide and 60 ft [18.29 m] long, use "Earth-Covered Magazine - side and rear" distances of C9.T1. and "Other PES" distance of Table C9.T1. for the front exposure.

C9.4.1.2.1.1.3.4. For Hazard Division 1.1 in an Undefined ECM, where internal dimensions are less than 26 ft [7.92 m] wide and 60 ft [18.29 m] long, use "Other PES" distances of Table C9.T1. for front, side, and rear exposures.

C9.4.1.2.1.1.4. For sparsely populated locations (i.e., no more than 25 persons located in any sector bounded by the sides of a 45-degree angle, with the vertex at the

PES, and the 900 ft [274 m] and 1,250 ft [381 m] arcs from the PES), the minimum 1,250 ft [381 m] fragment distance may be reduced to 900 ft [274 m] if the NEWQD of the PES does not exceed 11,400 lbs [5,171 kg].

C9.4.1.2.1.1.5. For PTR, the minimum fragment distance for HD 1.1 AE shall be based on the traffic density considered at three levels: high, medium, and low traffic density. The traffic density shall be averaged over a normal (non-holiday) week in terms of number of passengers during a 24-hour period. Minimum fragment distance reductions based on sparse population considerations addressed above, do not apply to public traffic routes. (NOTE: In applying criteria other than the default values given below (which are based on car (and rail) speed of 50 mph [80 kph], and a ship speed of 10 mph [16 kph]), considerations such as the following shall be taken into account to establish exposure levels: speed of vehicles, number of passengers per vehicle, protection afforded by the vehicle, variation in daily traffic levels in relation to AE activities, and seasonal traffic trends. The default value of two passengers per car may be used to estimate traffic density.

C9.4.1.2.1.1.5.1. High Traffic Density. If routes have 10,000 or more car or rail passengers per day, or 2,000 or more ship passengers per day, then IBD criteria apply.

C9.4.1.2.1.1.5.2. Medium Traffic Density. If routes have between 400 and 10,000 car or rail passengers per day, or between 80 and 2,000 ship passengers per day, then 60 percent of the specified minimum fragment distance for IBD applies. As a minimum, these criteria apply to any recreational activity that is extensive and occurs on a regular basis.

C9.4.1.2.1.1.5.3. Low Traffic Density. If routes have fewer than 400 car or rail passengers per day, or fewer than 80 ship passengers per day, then no minimum fragment distance is required. Minimum distance shall be based on blast criteria ($24W^{1/3}/30W^{1/3}$ [$9.52Q^{1/3}/11.9Q^{1/3}$]).

C9.4.1.2.1.1.5.4. For other exposures that are permitted at PTRD, fragment distance minimal for HD 1.1 AE shall be at least 60 percent of the specified minimum fragment distance for IBD.

C9.4.1.2.1.2. Minimum fragment distances apply to:

C9.4.1.2.1.2.1. An installation's boundary unless the area outside the boundary naturally prohibits access or is government land that is not open to the public. When a QD arc extends beyond an installation's boundary, and the above exclusion applies, the DoD Component shall certify IBD protection need not be applied to the encumbered area and shall establish procedures to monitor the area for any change in status.

C9.4.1.2.1.2.2. Administration and housing areas.

C9.4.1.2.1.2.3. Recreation facilities (e.g., ball diamonds, golf courses, and volleyball courts). (See subparagraph C9.4.1.2.1.3.1. for situations where minimum fragment distances do not apply to recreational facilities.)

C9.4.1.2.1.2.4. Flight-line passenger service functions (e.g., terminal buildings).

C9.4.1.2.1.2.5. Main powerhouses that provide vital utilities to a major portion of an installation.

C9.4.1.2.1.2.6. Inert storage and shops that by reason of their vital strategic nature, or high intrinsic value of their contents, should not be placed at risk.

C9.4.1.2.1.2.7. Functions that, if momentarily put out of action, would cause an immediate secondary hazard by reason of their failure to function.

C9.4.1.2.1.2.8. Private vehicles parked in administrative areas.

C9.4.1.2.1.3. Examples when minimum fragment and firebrand distances need not apply are:

C9.4.1.2.1.3.1. Recreation or training facilities when such facilities are located near AE support operations and are used by off-duty military or on-duty military or DoD civilians or contractors (e.g., munitions workers, security guards, and firefighters) who directly support these AE operations.

C9.4.1.2.1.3.2. Related and support DoD-controlled functions for which IMD and ILD would normally apply.

C9.4.1.2.1.3.3. Maintenance, supply, training facilities, and operations offices for logistical or operational support of combat aircraft, battalion-size or smaller delivery or AE supply units, separate air defense firing batteries, or a single pier or wharf for which the AE in a PES is intended.

C9.4.1.2.1.3.4. Between a PES and inert storage, whether in a facility or in the open.

C9.4.1.2.1.3.5. Between facilities in an operating line; between operating lines; and between operating lines and storage locations.

C9.4.1.3. IBD and PTRD. Subparagraph C9.4.1.2.1.1. specifies required separation distances to inhabited buildings and public traffic routes for ECM and other types of PESs containing HD 1.1. Permissible exposures at these distances are listed in subparagraphs C9.4.1.1.4. through C9.4.1.1.6.

C9.4.1.3.1. ECM. Specified separations from ECM consider reductions in blast overpressure attributable to the earth cover of ECM, when the earth cover has a minimum thickness of 2 ft [0.61 m]. See subparagraph C9.4.1.2.1.1. for application of “Earth-Covered

Magazine" distances of Table C9.T1. to 7-Bar, 3-Bar, and Undefined ECM. The definitions for "front," "side," and "rear" for ECM are illustrated in Figure C9.F1. and are described below:

C9.4.1.3.1.1. The forward sector, or "front," for ECM is that area 60 degrees either side of the ECM's centerline (120 degrees combined angle), with the vertex of the angle placed so that the sides of the angle pass through the intersection of the headwall and sidewalls.

C9.4.1.3.1.2. The rear sector, or "rear," of an ECM is that area 45 degrees either side of the magazine centerline (90 degrees combined angle) with the vertex of the angle placed so that the sides of the angle pass through the intersection of the rear and side walls.

C9.4.1.3.1.3. All other orientations are considered "side" sectors.

C9.4.1.3.2. HPM. Testing has shown that the design of the earth-bermed HPM attenuates pressures relative to an unconfined surface burst similar to that indicated above for an ECM. The following pertain to siting of an HPM:

C9.4.1.3.2.1. An HPM has a "front" sector and a "side" sector. The definition of "front" for ECM (see subparagraph C9.4.1.3.1.1.) applies to an HPM. All other orientations are considered "side" sectors. Figure C9.F8. illustrates the sectors associated with an HPM. (NOTE: An HPM has no "rear" sector.)

C9.4.1.3.2.2. The values shown in Table C9.T4. for front exposure from an ECM also apply to the front of an HPM.

C9.4.1.3.2.3. The values shown in Table C9.T4. for side exposure from an ECM apply to the remainder (all but the front) of an HPM.

C9.4.1.4. ILD. Separation distances required between AE and non-AE buildings and sites within an AE operating line are listed for various quantities of HD 1.1 AE in Table C9.T5. Permissible exposures at ILD are listed in subparagraphs C9.4.1.1.1. (barricaded ILD) and C9.4.1.1.2. (unbarricaded ILD). In order to apply barricaded ILD, barricades must comply with paragraph C5.3.2. (The separation distance between an operating building and its service magazine shall be based on the NEWQD and the HD of the AE in the magazine and not that in other parts of the operating line.)

C9.4.1.4.1. ILD from ECM. Testing has shown that some attenuation of airblast overpressure relative to an unconfined surface burst occurs out the sides and rear of an ECM and a slight increase occurs out the front of an ECM. The equivalent $9W^{1/3}$ [$3.57Q^{1/3}$] (12 psi [82.7 kPa] (barricaded)) and $18W^{1/3}$ [$7.14\ Q^{1/3}$] (3.5 psi [24 kPa] (unbarricaded)) ILD from an ECM, when accounting for this attenuation, are given in Table C9.T4. (Airblast forms the bases for the equations given in the notes for Table C9.T4.)

C9.4.1.4.2. Barricaded ILD from an ECM. Subparagraph C9.4.1.5.4. provides criteria for the application of barricaded ILD from an ECM.

C9.4.1.4.3. ILD from HPM. The values shown in Table C9.T4. for front exposure from an ECM also apply to front exposures from an HPM. The values shown in Table C9.T4. for side exposure from an ECM apply to all other orientations of an HPM. (The side of an HPM is considered barricaded, provided the earth barricading complies with the design drawing.)

C9.4.1.5. IMD. Magazines for HD 1.1 shall be separated one from another per Tables C9.T6., C9.T7A., and C9.T7B. (NOTE: Table C9.T6. provides orientation relationships for ECM and Tables C9.T7A. and C9.T7B. provide the actual separation distances.)

C9.4.1.5.1. Siting Rules. For examples of siting rules for various magazine orientations see Figures C9.F1. through C9.F8.

C9.4.1.5.2. Barricaded IMD from ECM. Subparagraph C9.4.1.5.4. provides criteria for the application of barricaded IMD from ECM.

C9.4.1.5.3. Other Factors Limiting ECM Storage. Other factors limiting ECM storage include:

C9.4.1.5.3.1. Quantities above 500,000 lbs [226,795 kg] NEWQD in one ECM are not authorized, except for energetic liquids.

C9.4.1.5.3.2. The 7-foot separation distance given in Table C9.T7A. for 100 lbs [45.4 kg] NEWQD constitutes the minimum side-to-side magazine separation distance.

C9.4.1.5.4. Application of Barricaded ILD and Barricaded IMD from an ECM. Figure C9.F7. illustrates the IMD relationships that can exist between an ECM and AGM and the ILD relationships that can exist between an ECM and facilities permitted to be at ILD or barricaded ILD from an ECM, when each contain HD 1.1 AE. Permissible exposures at ILD are listed in subparagraphs C9.4.1.1.1. (barricaded ILD) and C9.4.1.1.2. (unbarricaded ILD). Siting criteria for AGM are provided in Table C9.T6. The following criteria shall apply to the use of barricaded IMD for AGM and for use of barricaded ILD:

C9.4.1.5.4.1. Front Sector of an ECM. Use of barricaded ILD or barricaded IMD, as applicable, between an ECM and a facility located within the ECM's front sector requires that a properly constructed, intervening barricade be located between the ES and the PES. This barricade must meet the construction and location criteria of section C5.3. If it does not meet these criteria, then unbarricaded IMD or unbarricaded ILD, as applicable, shall be used for siting purposes.

C9.4.1.5.4.2. Side and Rear Sectors of an ECM. If an ECM's earth cover meets all construction criteria of section C5.3., it will qualify as a barricade, and use of barricaded ILD or barricaded IMD, as applicable, from the sides or rear of the ECM is permissible. Failure of the ECM's earth cover to meet these criteria shall require use of unbarricaded IMD or unbarricaded ILD, as applicable, for siting purposes.

C9.4.1.5.5. Application of Barricaded ILD and Barricaded IMD from an HPM. Permissible exposures at ILD are listed in subparagraphs C9.4.1.1.1. (barricaded ILD) and C9.4.1.1.2. (unbarricaded ILD). Siting criteria for HPM containing HD 1.1 are provided in Table C9.T6. The following applies to an HPM:

C9.4.1.5.5.1. Front Sector of an HPM. Use of barricaded ILD or barricaded IMD, as applicable, between an HPM and a facility located within the HPM's front sector requires that a properly constructed, intervening barricade be located between the ES and the PES. This barricade must meet the construction and location criteria of section C5.3. If it does not meet these criteria, then unbarricaded IMD or ILD, as applicable, shall be used for siting purposes.

C9.4.1.5.5.2. Side Sector of an HPM. If the earth berm surrounding an HPM meets all construction criteria shown on the DDESB-approved construction drawing, it will qualify as a barricade and use of barricaded ILD or barricaded IMD, as applicable, from the HPM's sides is permissible. Failure to meet these criteria shall require use of unbarricaded IMD or unbarricaded ILD, as applicable, for siting purposes.

C9.4.1.5.6. These IMD standards apply only to storage of HD 1.1 AE. Existing ECM, regardless of orientation, that meet the construction and barricading requirements of Chapter 5 and are sited one from another for a minimum of 100 lbs [45.4 kg] NEWQD of HD 1.1 may be used to their physical storage capacity for HD 1.2, HD 1.3, and HD 1.4 AE, provided distances to other exposures comply with applicable QD requirements.

Table C9.T4. HD 1.1 ILD from ECM

NEWQD	Barricaded			Unbarricaded		
	Front[1]	Side[2]	Rear[3]	Front[4]	Side[5]	Rear[6]
(lbs)	(ft)	(ft)	(ft)	(ft)	(ft)	(ft)
[kg]	*[m]*	*[m]*	*[m]*	*[m]*	*[m]*	*[m]*
50	37	26	22	66	59	44
22.7	*11.2*	*7.9*	*6.7*	*20.2*	*18.0*	*13.5*
70	41	29	25	74	66	49
31.8	*12.6*	*8.8*	*7.5*	*22.6*	*20.1*	*15.1*
100	46	32	28	84	74	56
45.4	*14.2*	*9.9*	*8.5*	*25.5*	*22.6*	*17.0*
150	53	37	32	96	85	64
68.0	*16.2*	*11.3*	*9.7*	*29.1*	*25.9*	*19.4*
200	58	41	35	105	94	70
90.7	*17.8*	*12.5*	*10.7*	*32.1*	*28.5*	*21.4*
300	67	47	40	120	107	80
136.1	*20.4*	*14.3*	*12.2*	*36.7*	*32.7*	*24.5*
500	79	56	48	143	127	95
226.8	*24.2*	*17.0*	*14.5*	*43.5*	*38.7*	*29.0*
700	89	62	53	160	142	107
317.5	*27.1*	*19.0*	*16.2*	*48.7*	*43.3*	*32.5*
1,000	100	70	60	180	160	120
453.6	*30.5*	*21.4*	*18.3*	*54.9*	*48.8*	*36.6*
1,500	114	80	69	206	183	137
680.4	*34.9*	*24.5*	*20.9*	*62.8*	*55.9*	*41.9*
2,000	126	88	76	227	202	151
907.2	*38.4*	*26.9*	*23.0*	*69.1*	*61.5*	*46.1*
3,000	144	101	87	260	231	173
1,360.8	*44.0*	*30.8*	*26.4*	*79.1*	*70.4*	*52.7*
5,000	171	120	103	308	274	205
2,268.0	*52.2*	*36.5*	*31.3*	*93.8*	*83.4*	*62.5*
7,000	191	134	115	344	306	230
3,175.1	*58.4*	*40.9*	*35.0*	*104.9*	*93.3*	*70.0*
10,000	215	151	129	388	345	259
4,535.9	*65.7*	*46.0*	*39.4*	*118.2*	*105.1*	*78.8*
15,000	247	173	148	444	395	296
6,803.9	*75.2*	*52.7*	*45.1*	*135.3*	*120.3*	*90.2*
20,000	271	190	163	489	434	326
9,071.8	*82.8*	*58.0*	*49.6*	*148.9*	*132.4*	*99.3*
30,000	311	218	186	559	497	373
13,607.7	*94.8*	*66.4*	*56.8*	*170.5*	*151.6*	*113.6*
50,000	368	258	221	663	589	442
22,679.5	*112.4*	*78.7*	*67.4*	*202.1*	*179.7*	*134.7*

Table C9.T4. HD 1.1 ILD from ECM (continued)

NEWQD	Barricaded			Unbarricaded		
	Front[1]	Side[2]	Rear[3]	Front[4]	Side[5]	Rear[6]
(lbs)	(ft)	(ft)	(ft)	(ft)	(ft)	(ft)
[kg]	*[m]*	*[m]*	*[m]*	*[m]*	*[m]*	*[m]*
70,000	412	288	247	742	659	495
31,751.3	*125.7*	*88.0*	*75.4*	*226.1*	*201.1*	*150.7*
100,000	464	325	278	835	743	557
45,359.0	*141.6*	*99.1*	*84.9*	*254.6*	*226.5*	*169.8*
150,000	531	372	319	956	850	653
68,038.5	*162.1*	*113.5*	*97.2*	*291.5*	*259.2*	*199.1*
200,000	585	409	351	1,053	936	746
90,718.0	*178.4*	*124.9*	*106.9*	*320.8*	*285.3*	*227.4*
300,000	669	469	402	1,205	1,071	937
136,077.0	*204.2*	*143.0*	*122.4*	*367.2*	*326.6*	*285.7*
500,000	715	714	714	1,429	1,429	1,429
226,795.0	*218.0*	*217.7*	*217.7*	*435.4*	*435.4*	*435.4*

Notes for Table C9.T4.:

1. (NEWQD in lbs, d in ft)

NEWQD $\leq$ 300,000 lbs	$d = 10*NEWQD^{1/3}$	[English EQN C9.T4-1]
300,000 lbs < NEWQD $\leq$ 500,000 lbs	$d = (13.659 - 1.6479 \times 10^{-5}*NEWQD + 1.4358 \times 10^{-11}* NEWQD^2)* NEWQD^{1/3}$	[English EQN C9.T4-2]
$d \leq 669$ ft	$NEWQD = d^3/1000$	[English EQN C9.T4-3]
669 ft < $d \leq 715$ ft	$NEWQD = 1.50138 \times 10^8 - 6.73914 \times 10^5 *d + 1002.9*d^2 - 0.4938*d^3$	[English EQN C9.T4-4]

(NEWQD in kg, d in m)

NEWQD $\leq$ 136,077 kg	$d = 3.97*NEWQD^{1/3}$	[Metric EQN C9.T4-5]
136,077 kg < NEWQD $\leq$ 226,795 kg	$d = (5.419 - 1.4410 \times 10^{-5}*NEWQD + 2.7684 \times 10^{-11}* NEWQD^2)*NEWQD^{1/3}$	[Metric EQN C9.T4-6]
$d \leq 204.2$ m	$NEWQD = d^3/62.429$	[Metric EQN C9.T4-7]
204.2 < $d \leq 218.0$ m	$NEWQD = 6.80924 \times 10^7 - 1.002764 \times 10^6*d + 4895.93*d^2 - 7.90884*d^3$	[Metric EQN C9.T4-8]

2. (NEWQD in lbs, d in ft)

NEWQD $\leq$ 300,000 lbs	$d = 7*NEWQD^{1/3}$	[English EQN C9.T4-9]
300,000 lbs < NEWQD $\leq$ 400,000 lbs	$d = (1.0848 + 1.986 \times 10^{-5}*NEWQD)*NEWQD^{1/3}$	[English EQN C9.T4-10]
NEWQD > 400,000 lbs	$d = 9*NEWQD^{1/3}$	[English EQN C9.T4-11]
$d \leq 469$ ft	$NEWQD = d^3/343$	[English EQN C9.T4-12]
469 ft < $d \leq 663$ ft	$NEWQD = 57{,}424 + 515.89*d$	[English EQN C9.T4-13]
d > 663 ft	$NEWQD = d^3/729$	[English EQN C9.T4-14]

(NEWQD in kg, d in m)

NEWQD $\leq$ 136,077 kg	$d = 2.78*NEWQD^{1/3}$	[Metric EQN C9.T4-15]
136,077 kg < NEWQD $\leq$ 181,434 kg	$d = (0.4303 + 1.7369 \times 10^{-5}*NEWQD)*NEWQD^{1/3}$	[Metric EQN C9.T4-16]
NEWQD > 181,436 kg	$d = 3.57*NEWQD^{1/3}$	[Metric EQN C9.T4-17]
$d \leq 143.7$ m	$NEWQD = d^3/21.413$	[Metric EQN C9.T4-18]
143.7 m < $d \leq 202.8$ m	$NEWQD = 26{,}048 + 767.73*d$	[Metric EQN C9.T4-19]
d > 202.8 m	$NEWQD = d^3/45.511$	[Metric EQN C9.T4-20]

3. (NEWQD in lbs, d in ft)

NEWQD $\leq$ 300,000 lbs	$d = 6*NEWQD^{1/3}$	[English EQN C9.T4-21]
300,000 lbs < NEWQD $\leq$ 400,000 lbs	$d = (-3.059 + 3.0228 \times 10^{-5}*NEWQD)*NEWQD^{1/3}$	[English EQN C9.T4-22]
NEWQD > 400,000 lbs	$d = 9*NEWQD^{1/3}$	[English EQN C9.T4-23]
d $\leq$ 402 ft	$NEWQD = d^3/216$	[English EQN C9.T4-24]
402 ft < d $\leq$ 665 ft	NEWQD = 148,160 + 379.7*d	[English EQN C9.T4-25]
d > 665 ft	$NEWQD = d^3/729$	[English EQN C9.T4-26]
(NEWQD in kg, d in m)		
NEWQD $\leq$ 136,077 kg	$d = 2.38*NEWQD^{1/3}$	[Metric EQN C9.T4-27]
136,077 kg < NEWQD $\leq$ 181,436 kg	$d = (-1.2135 + 2.6437 \times 10^{-5}*NEWQD)*NEWQD^{1/3}$	[Metric EQN C9.T4-28]
NEWQD > 181,436 kg	$d = 3.57*NEWQD^{1/3}$	[Metric EQN C9.T4-29]
d $\leq$ 122.6 m	$NEWQD = d^3/13.485$	[Metric EQN C9.T4-30]
122.6 m < d $\leq$ 202.8 m	NEWQD = 67,206 + 565.05*d	[Metric EQN C9.T4-31]
d > 202.8 m	$NEWQD = d^3/45.511$	[Metric EQN C9.T4-32]
4. (NEWQD in lbs, d in ft)		
NEWQD $\leq$ 500,000 lbs	$d = 18*NEWQD^{1/3}$	[English EQN C9.T4-33]
d $\leq$ 1429 ft	$NEWQD = d^3/5{,}832$	[English EQN C9.T4-34]
(NEWQD in kg, d in m)		
NEWQD $\leq$ 226,795 kg	$d = 7.14*NEWQD^{1/3}$	[Metric EQN C9.T4-35]
d > 435.4 m	$NEWQD = d^3/364.086$	[Metric EQN C9.T4-36]
5. (NEWQD in lbs, d in ft)		
NEWQD $\leq$ 300,000 lbs	$d = 16*NEWQD^{1/3}$	[English EQN C9.T4-37]
300,000 lbs < NEWQD $\leq$ 400,000 lbs	$d = (9.9683 + 2.0135 \times 10^{-5}*NEWQD)*NEWQD^{1/3}$	[English EQN C9.T4-38]
NEWQD > 400,000 lbs	$d = 18*NEWQD^{1/3}$	[English EQN C9.T4-39]
d $\leq$ 1071 ft	$NEWQD = d^3/4{,}096$	[English EQN C9.T4-40]
1071 ft < d $\leq$ 1328 ft	NEWQD = -118,180 + 390.35*d	[English EQN C9.T4-41]
d > 1328 ft	$NEWQD = d^3/5{,}832$	[English EQN C9.T4-42]
(NEWQD in kg, d in m)		
NEWQD $\leq$ 136,077 kg	$d = 6.35*NEWQD^{1/3}$	[Metric EQN C9.T4-43]
136,077 kg < NEWQD $\leq$ 181,436 kg	$d = (3.9544 + 1.76097 \times 10^{-5}*NEWQD)*NEWQD^{1/3}$	[Metric EQN C9.T4-44]
NEWQD > 181,436 kg	$d = 7.14*NEWQD^{1/3}$	[Metric EQN C9.T4-45]
d $\leq$ 326.6 m	$NEWQD = d^3/255.709$	[Metric EQN C9.T4-46]
122.6 m < d $\leq$ 202.8 m	NEWQD = -53,605 + 580.89*d	[Metric EQN C9.T4-47]
d > 404.7 m	$NEWQD = d^3/364.086$	[Metric EQN C9.T4-48]
6. (NEWQD in lbs, d in ft)		
NEWQD $\leq$ 100,000 lbs	$d = 12*NEWQD^{1/3}$	[English EQN C9.T4-49]
100,000 lbs < NEWQD $\leq$ 300,000 lbs	$d = (11.521 + 1.9918 \times 10^{-6}*NEWQD + 2.0947 \times 10^{-11}* NEWQD^2)* NEWQD^{1/3}$	[English EQN C9.T4-50]
300,000 lbs < NEWQD $\leq$ 400,000 lbs	$d = (1.9389+ 4.0227 \times 10^{-5}*NEWQD)* NEWQD^{1/3}$	[English EQN C9.T4-51]
NEWQD > 400,000 lbs	$d = 18*NEWQD^{1/3}$	[English EQN C9.T4-52]
d $\leq$ 557 ft	$NEWQD = d^3/1{,}728$	[English EQN C9.T4-53]
557 ft < d $\leq$ 938 ft	NEWQD = -193,080+526.83*d	[English EQN C9.T4-54]
938 ft < d $\leq$ 1328 ft	NEWQD = 60,778 + 255.83*d	[English EQN C9.T4-55]
d > 1328 ft	$NEWQD = d^3/5{,}832$	[English EQN C9.T4-56]
(NEWQD in kg, d in m)		
NEWQD $\leq$ 45,359 kg lbs	$d = 4.76*NEWQD^{1/3}$	[Metric EQN C9.T4-57]
45,359 kg < NEWQD $\leq$ 136,077 kg	$d = (4.5704 + 1.7420 \times 10^{-6}*NEWQD + 4.0389 \times 10^{-11}* NEWQD^2)* NEWQD^{1/3}$	[Metric EQN C9.T4-58]
136,077 kg < NEWQD $\leq$ 181,436 kg	$d = (0.7692+ 3.5182 \times 10^{-5}*NEWQD)* NEWQD^{1/3}$	[Metric EQN C9.T4-59]
NEWQD 181,436 kg	$d = 7.14*NEWQD^{1/3}$	[Metric EQN C9.T4-60]
d $\leq$ 169.8 m	$NEWQD = d^3/107.877$	[Metric EQN C9.T4-61]
169.8 m < d $\leq$ 285.7 m	NEWQD = -87,578 + 784.00*d	[Metric EQN C9.T4-62]
285.7 m < d $\leq$ 404.7 m	NEWQD = 27,568 + 380.7*d	[Metric EQN C9.T4-63]
d > 404.7 m	$NEWQD = d^3/364.086$	[Metric EQN C9.T4-64]

Table C9.T5. HD 1.1 ILD

NEWQD (lbs) *[kg]*	**BARRICADED DISTANCE[1] (ft)** *[m]*	**UNBARRICADED DISTANCE[2] (ft)** *[m]*
50[3]	33	66
22.7[3]	*10.1*	*20.2*
70	37	74
31.8	*11.3*	*22.6*
100	42	84
45.4	*12.7*	*25.5*
150	48	96
68.0	*14.6*	*29.1*
200	53	105
90.7	*16.0*	*32.1*
300	60	120
136.1	*18.4*	*36.7*
500	71	143
226.8	*21.8*	*43.5*
700	80	160
317.5	*24.4*	*48.7*
1,000	90	180
453.6	*27.4*	*54.9*
1,500	103	206
680.4	*31.4*	*62.8*
2,000	113	227
907.2	*34.6*	*69.1*
3,000	130	260
1,360.8	*39.6*	*79.1*
5,000	154	308
2,268.0	*46.9*	*93.8*
7,000	172	344
3,175.1	*52.5*	*104.9*
10,000	194	388
4,535.9	*59.1*	*118.2*
15,000	222	444
6,803.9	*67.6*	*135.3*
20,000	244	489
9,071.8	*74.5*	*148.9*
30,000	280	559
13,607.7	*85.2*	*170.5*

Table C9.T5. HD 1.1 ILD (continued)

NEWQD (lbs) *[kg]*	**BARRICADED DISTANCE[1] (ft)** *[m]*	**UNBARRICADED DISTANCE[2] (ft)** *[m]*
50,000	332	663
22,679.5	*101.1*	*202.1*
70,000	371	742
31,751.3	*113.0*	*226.1*
100,000	418	835
45,359.0	*127.3*	*254.6*
150,000	478	956
68,038.5	*145.7*	*291.5*
200,000	526	1,053
90,718.0	*160.4*	*320.8*
300,000	602	1,205
136,077.0	*183.6*	*367.2*
500,000[4]	714	1,429
226,795.0[4]	*217.7*	*435.4*
700,000	799	1,598
317,513.0	*243.6*	*487.1*
1,000,000	900	1,800
453,590.0	*274.3*	*548.6*
1,500,000	1,030	2,060
680,385.0	*314.0*	*628.0*
2,000,000	1,134	2,268
907,180.0	*345.6*	*691.2*
3,000,000	1,298	2,596
1,360,770.0	*395.6*	*791.2*
5,000,000	1,539	3,078
2,267,950.0	*469.0*	*938.1*

Notes for Table C9.T5.:

1. (d in ft, NEWQD in lbs) - $d = 9*NEWQD^{1/3}$ [English EQN C9.T5-1]
   (d in m, NEWQD in kg) - $d = 3.57*NEWQD^{1/3}$ [Metric EQN C9.T5-2]
   (NEWQD in lbs, d in ft) ---- $NEWQD = d^3/729$ [English EQN C9.T5-3]
   (NEWQD in kg, d in m) $NEWQD = d^3/45.511$ [Metric EQN C9.T5-4]

2. (d in ft, NEWQD in lbs) ---- $d = 18*NEWQD^{1/3}$ [English EQN C9.T5-5]
   (d in m, NEWQD in kg) ---- $d = 7.14*NEWQD^{1/3}$ [Metric EQN C9.T5-6]
   (NEWQD in lbs, d in ft) -- $NEWQD = d^3/5{,}832$ [English EQN C9.T5-7]
   (NEWQD in kg, d in m) $NEWQD = d^3/364.086$ [Metric EQN C9.T5-8]

3. For less than 50 lbs [22.7 kg], less distance may be used when structures, blast mats, and the like can completely contain fragments and debris. This table is not applicable when blast, fragments, and debris are completely confined, as in certain test firing barricades.

4. Quantities above 500,000 lbs [226,795 kg] NEWQD are authorized only for HD 1.1 energetic liquids.

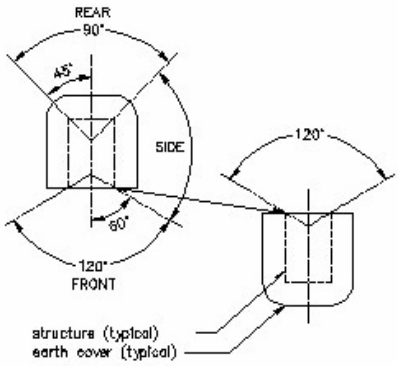

FIGURE C9.F1. ECM Orientation Effects on IMD: Side-to-Side Orientation (see subparagraph C9.4.1.5)

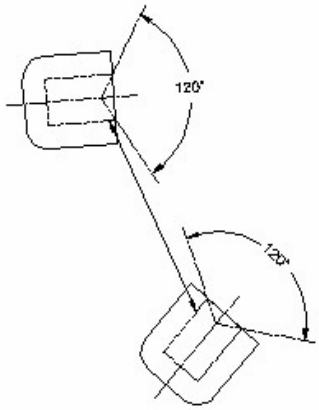

FIGURE C9.F2. ECM Orientation Effects on IMD: Side-to-Side Orientation (see subparagraph C9.4.1.5)

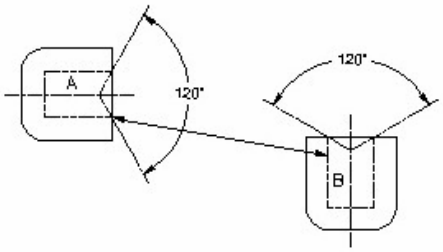

NOTES:

Site A as a Side-to-Front (unbarricaded) ES
Site B as a Front (unbarricaded)-to-Side ES

FIGURE C9.F3. ECM Orientation Effects on IMD (see subparagraph C9.4.1.5)

Table C9.T6. HD 1.1 IMD Hazard Factors

To EXPOSED SITE (ES)		From POTENTIAL EXPLOSION SITE (PES)									
		ECM[1]				AGM[2]		Modules and/or Cells		HPM[3,9]	
		S	R	FB	FU	B	U	B	U	S	F[4]
ECM (7-Bar)	**S**	1.25 *0.50*	1.25 *0.50*	2.75 *1.09*	2.75 *1.09*	4.5 *1.79*	4.5 *1.79*	4.5 *1.79*	4.5 *1.79*	1.25 *0.50*	2.75 *1.09*
	R	1.25 *0.50*	1.25 *0.50*	2 *0.79*	2 *0.79*	4.5 *1.79*	4.5 *1.79*	4.5 *1.79*	4.5 *1.79*	1.25 *0.50*	2 *0.79*
	FU	2.75 *1.09*	2 *0.79*	6 *2.38*	6 *2.38*	6 *2.38*	6 *2.38*	6 *2.38*	6 *2.38*	2.75 *1.09*	6 *2.38*
	FB[5]	2.75 *1.09*	2 *0.79*	4.5 *1.79*	6 *2.38*	4.5 *1.79*	6 *2.38*	4.5 *2.38*	6 *2.38*	2.75 *1.09*	6 *2.38*
ECM (3-Bar)	**S**	1.25 *0.50*	1.25 *0.50*	2.75 *1.09*	2.75 *1.09*	6 *2.38*	6 *2.38*	6 *2.38*	6 *2.38*	1.25 *0.50*	2.75 *1.09*
	R	1.25 *0.50*	1.25 *0.50*	2 *0.79*	2 *0.79*	6 *2.38*	6 *2.38*	6 *2.38*	6 *2.38*	1.25 *0.50*	2 *0.79*
	FU	4.5 *1.79*	4.5 *1.79*	6 *3.57*	9 *3.57*	6 *2.38*	9 *3.57*	6 *2.38*	9 *3.57*	4.5 *1.79*	9 *3.57*
	FB[5]	4.5 *1.79*	4.5 *1.79*	6 *2.38*	6 *2.38*	6 *2.38*	6 *2.38*	6 *2.38*	6 *2.38*	4.5 *1.79*	6 *2.38*
ECM (Undefined)	**S**	1.25[6] *0.50[6]* 2[7] *0.79[7]*	1.25[6] *0.50[6]* 2[7] *0.79[7]*	4.5[6] *1.79[6]* 6[7] *2.38[7]*	4.5[6] *1.79[6]* 6[7] *2.38[7]*	6 *2.38*	6 *2.38*	6 *2.38*	6 *2.38*	1.25 *0.50*	4.5 *1.79*
	R	1.25 *0.50*	1.25 *0.50*	2 *0.79*	2 *0.79*	6 *2.38*	6 *2.38*	6 *2.38*	6 *2.38*	1.25 *0.50*	2 *0.79*
	FU	6 *2.38*	6 *2.38*	6 *2.38*	11 *4.36*	6 *2.38*	11 *4.36*	6 *2.38*	11 *2.38*	6 *2.38*	11 *4.36*
	FB[5]	6 *2.38*	6 *2.38*	6 *2.38*	6 *2.38*	6 *2.38*	6 *2.38*	6 *2.38*	6 *2.38*	6 *2.38*	6 *2.38*
AGM	**U**	6 *2.38*	6 *2.38*	6 *2.38*	11 *4.36*	6 *2.38*	11 *4.36*	6 *2.38*	11 *2.38*	6 *2.38*	11 *4.36*
	B	6 *2.38*	6 *2.38*	6 *2.38*	6 *2.38*	6 *2.38*	6 *2.38*	6 *2.38*	6 *2.38*	6 *2.38*	6 *2.38*
Modules and/or Cells	**U**	6 *2.38*	6 *2.38*	6 *2.38*	11 *4.36*	6 *2.38*	11 *4.36*	1.1[8] *0.44[8]*	11 *4.36*	6 *2.38*	11
	B	1.25 *0.50*	1.25 *0.50*	6 *2.38*	6 *2.38*	6 *2.38*	6 *2.38*	1.1[8] *0.44[8]*	1.1[8] *0.44[8]*	1.25 *0.50*	6 *2.38*
HPM	**S,F[9]**	1.25 *0.50*	1.25 *0.50*	2.75 *1.09*	2.75 *1.09*	4.5 *1.79*	4.5 *1.79*	4.5 *1.79*	4.5 *1.79*	1.25 *0.50*	2.75 *1.09*

Legend for Table C9.T6.:

S—Side; **R**—Rear; **F**—Front: **B**—Barricaded; **U**—Unbarricaded; **FU**—Front Unbarricaded; **FB**—Front Barricaded.

ECM—Earth-Covered Magazine (7-Bar, 3-Bar, or Undefined, which refers to the structural strength of the headwall and door(s)).

AGM—Aboveground Magazine

HPM—High Performance Magazine

Notes for Table C9.T6.:

1. Descriptions of ECM are in paragraph C5.2.1.
2. AGM are all types of above grade (non-earth-covered) magazines or storage pads.

3. A description of an HPM can be found at paragraph C5.2.4. Additional information is provided in subparagraph C9.4.1.3. The MCE in an HPM is limited to a maximum of 60,000 lbs [27,216 kg].
4. The unbarricaded front (entrance to loading area) is a factor when the HPM is the PES because the MCE includes AE in the loading area. The hazard factors have been determined accordingly.
5. Those barricades serve to mitigate both fragments and overpressure hazards. (See section C5.3. for their requirements.)
6. Use this K-factor for NEWQD in PES up to 250,000 lbs [113,398 kg].
7. Use this K-factor for NEWQD in PES greater than 250,000 lbs [113,398 kg].
8. Modules and/or cells are defined in paragraph C5.2.2.
9. The storage areas in the HPM are barricaded on all sides and protected by a reinforced concrete cover. All directions are, therefore, considered to be Side (S) orientations when it is the ES. For siting purposes, an HPM has no Rear (R) sector. See Figure C9.F8. for an illustration of the front and side sectors of an HPM.

Table C9.T7A. QD for HD 1.1 AE for K = 1.1, 1.25, 2, 2.75, 4.5, and 5

NEWQD	**Hazard Factor, K**					
	1.1	**1.25**	**2**	**2.75**	**4.5**	**5**
	0.44	***0.50***	***0.79***	***1.09***	***1.79***	***1.98***
(lbs)	**(ft/lb$^{1/3}$)**	**(ft/lb$^{1/3}$)**	**(ft/lb$^{1/3}$)**	**(ft/lb$^{1/3}$)**	**(ft/lb$^{1/3}$)**	**(ft/lb$^{1/3}$)**
[kg]	***[m/kg$^{1/3}$]***	***[m/kg$^{1/3}$]***	***[m/kg$^{1/3}$]***	***[m/kg$^{1/3}$]***	***[m/kg$^{1/3}$]***	***[m/kg$^{1/3}$]***
100	7.0	7.0	9.3	13	21	23
45.4	*2.1*	*2.1*	*2.8*	*3.9*	*6.4*	*7.1*
150	7.0	7.0	11	15	24	27
68.0	*2.1*	*2.1*	*3.2*	*4.4*	*7.3*	*8.1*
200	7.0	7.3	12	16	26	29
90.7	*2.1*	*2.2*	*3.5*	*4.9*	*8.0*	*8.9*
300	7.4	8.4	13	18	30	33
136.1	*2.3*	*2.6*	*4.1*	*5.6*	*9.2*	*10.2*
500	8.7	9.9	16	22	36	40
226.8	*2.7*	*3.0*	*4.8*	*6.6*	*10.9*	*12.1*
700	9.8	11	18	24	40	44
317.5	*3.0*	*3.4*	*5.4*	*7.4*	*12.2*	*13.5*
1,000	11	13	20	27	45	50
453.6	*3.4*	*3.8*	*6.1*	*8.4*	*13.8*	*15.2*
1,500	13	14	23	31	52	57
680.4	*3.9*	*4.4*	*6.9*	*9.6*	*15.7*	*17.4*
2,000	14	16	25	35	57	63
907.2	*4.3*	*4.8*	*7.6*	*10.6*	*17.3*	*19.2*
3,000	16	18	29	40	65	72
1,360.8	*4.9*	*5.5*	*8.8*	*12.1*	*19.8*	*21.9*

Table C9.T7A. QD for HD 1.1 AE for K = 1.1, 1.25, 2, 2.75, 4.5, and 5 (continued)

NEWQD	**Hazard Factor, K**					
	1.1	**1.25**	**2**	**2.75**	**4.5**	**5**
	0.44	***0.50***	***0.79***	***1.09***	***1.79***	***1.98***
(lbs)	**(ft/lb$^{1/3}$)**	**(ft/lb$^{1/3}$)**	**(ft/lb$^{1/3}$)**	**(ft/lb$^{1/3}$)**	**(ft/lb$^{1/3}$)**	**(ft/lb$^{1/3}$)**
[kg]	***[m/kg$^{1/3}$]***	***[m/kg$^{1/3}$]***	***[m/kg$^{1/3}$]***	***[m/kg$^{1/3}$]***	***[m/kg$^{1/3}$]***	***[m/kg$^{1/3}$]***
5,000	19	21	34	47	77	85
2,268.0	*5.8*	*6.6*	*10.4*	*14.3*	*23.5*	*26.0*
7,000	21	24	38	53	86	96
3,175.1	*6.5*	*7.3*	*11.6*	*16.0*	*26.3*	*29.1*
10,000	24	27	43	59	97	108
4,535.9	*7.3*	*8.3*	*13.1*	*18.0*	*29.6*	*32.8*
15,000	27	31	49	68	111	123
6,803.9	*8.3*	*9.5*	*15.0*	*20.7*	*33.9*	*37.5*
20,000	30	34	54	75	122	136
9,071.8	*9.2*	*10.4*	*16.5*	*22.7*	*37.3*	*41.3*
30,000	34	39	62	85	140	155
13,607.7	*10.5*	*11.9*	*18.9*	*26.0*	*42.7*	*47.3*
50,000	41	46	74	101	166	184
22,679.5	*12.5*	*14.2*	*22.4*	*30.9*	*50.7*	*56.0*
70,000	45	52	82	113	185	206
31,751.3	*13.9*	*15.8*	*25.0*	*34.5*	*56.7*	*62.7*
100,000	51	58	93	128	209	232
45,359.0	*15.7*	*17.8*	*28.2*	*38.9*	*63.8*	*70.6*
150,000	58	66	106	146	239	266
68,038.5	*18.0*	*20.4*	*32.3*	*44.5*	*73.1*	*80.8*
200,000	64	73	117	161	263	292
90,718.0	*19.8*	*22.5*	*35.5*	*49.0*	*80.4*	*89.0*
300,000	74	84	134	184	301	335
136,077.0	*22.6*	*25.7*	*40.6*	*56.1*	*92.1*	*101.8*
500,000	87	99	159	218	357	397
226,795.0	*26.8*	*30.5*	*48.2*	*66.5*	*109.2*	*120.7*
700,000	98	111	178	244	400	444
317,513.0	*30.0*	*34.1*	*53.9*	*74.4*	*122.1*	*135.1*
1,000,000	110	125	200	275	450	500
453,590.0	*33.8*	*38.4*	*60.7*	*83.7*	*137.5*	*152.1*

Table C9.T7B. QD for HD 1.1 AE for K = 6, 8, 9, 11, 18, and 40

NEWQD	**Hazard Factor, K**					
	6	**8**	**9**	**11**	**18**	**40**
	2.38	***3.17***	***3.57***	***4.36***	***7.14***	***15.87***
(lbs)	**(ft/lb$^{1/3}$)**	**(ft/lb$^{1/3}$)**	**(ft/lb$^{1/3}$)**	**(ft/lb$^{1/3}$)**	**(ft/lb$^{1/3}$)**	**(ft/lb$^{1/3}$)**
[kg]	***[m/kg$^{1/3}$]***	***[m/kg$^{1/3}$]***	***[m/kg$^{1/3}$]***	***[m/kg$^{1/3}$]***	***[m/kg$^{1/3}$]***	***[m/kg$^{1/3}$]***
100	28	37	42	51	84	186
45.4	*8.5*	*11.3*	*12.7*	*15.5*	*25.5*	*56.6*
150	32	43	48	58	96	213
68.0	*9.7*	*12.9*	*14.6*	*17.8*	*29.1*	*64.8*
200	35	47	53	64	105	234
90.7	*10.7*	*14.2*	*16.0*	*19.6*	*32.1*	*71.3*
300	40	54	60	74	120	268
136.1	*12.2*	*16.3*	*18.4*	*22.4*	*36.7*	*81.6*
500	48	63	71	87	143	317
226.8	*14.5*	*19.3*	*21.8*	*26.6*	*43.5*	*96.8*
700	53	71	80	98	160	355
317.5	*16.2*	*21.6*	*24.4*	*29.7*	*48.7*	*108.3*
1,000	60	80	90	110	180	400
453.6	*18.3*	*24.4*	*27.4*	*33.5*	*54.9*	*121.9*
1,500	69	92	103	126	206	458
680.4	*20.9*	*27.9*	*31.4*	*38.3*	*62.8*	*139.6*
2,000	76	101	113	139	227	504
907.2	*23.0*	*30.7*	*34.6*	*42.2*	*69.1*	*153.6*
3,000	87	115	130	159	260	577
1,360.8	*26.4*	*35.1*	*39.6*	*48.3*	*79.1*	*175.9*
5,000	103	137	154	188	308	684
2,268.0	*31.3*	*41.6*	*46.9*	*57.3*	*93.8*	*208.5*
7,000	115	153	172	210	344	765
3,175.1	*35.0*	*46.6*	*52.5*	*64.1*	*104.9*	*233.3*
10,000	129	172	194	237	388	862
4,535.9	*39.4*	*52.5*	*59.1*	*72.2*	*118.2*	*262.7*
15,000	148	197	222	271	444	986
6,803.9	*45.1*	*60.1*	*67.6*	*82.6*	*135.3*	*300.7*
20,000	163	217	244	299	489	1,086
9,071.8	*49.6*	*66.1*	*74.5*	*90.9*	*148.9*	*331.0*

Table C9.T7B. QD for HD 1.1 AE for K = 6, 8, 9, 11, 18, and 40 (continued)

NEWQD	**Hazard Factor, K**					
	6	**8**	**9**	**11**	**18**	**40**
	2.38	***3.17***	***3.57***	***4.36***	***7.14***	***15.87***
(lbs)	**(ft/lb$^{1/3}$)**	**(ft/lb$^{1/3}$)**	**(ft/lb$^{1/3}$)**	**(ft/lb$^{1/3}$)**	**(ft/lb$^{1/3}$)**	**(ft/lb$^{1/3}$)**
[kg]	***[m/kg$^{1/3}$]***	***[m/kg$^{1/3}$]***	***[m/kg$^{1/3}$]***	***[m/kg$^{1/3}$]***	***[m/kg$^{1/3}$]***	***[m/kg$^{1/3}$]***
30,000	186	249	280	342	559	1,243
13,607.7	*56.8*	*75.7*	*85.2*	*104.1*	*170.5*	*378.9*
50,000	221	295	332	405	663	1,474
22,679.5	*67.4*	*89.7*	*101.1*	*123.4*	*202.1*	*449.2*
70,000	247	330	371	453	742	1,649
31,751.3	*75.4*	*100.4*	*113.0*	*138.1*	*226.1*	*502.5*
100,000	278	371	418	511	835	1,857
45,359.0	*84.9*	*113.1*	*127.3*	*155.5*	*254.6*	*566.0*
150,000	319	425	478	584	956	2,125
68,038.5	*97.2*	*129.4*	*145.7*	*178.0*	*291.5*	*647.9*
200,000	351	468	526	643	1,053	2,339
90,718.0	*106.9*	*142.4*	*160.4*	*195.9*	*320.8*	*713.1*
300,000	402	536	602	736	1,205	2,678
136,077.0	*122.4*	*163.1*	*183.6*	*224.3*	*367.2*	*816.3*
500,000	476	635	714	873	1,429	3,175
226,795.0	*145.1*	*193.3*	*217.7*	*265.9*	*435.4*	*967.8*
700,000	533	710	799	977	1,598	3,552
317,513.0	*162.4*	*216.3*	*243.6*	*297.4*	*487.1*	*1,082.7*
1,000,000	600	800	900	1,100	1,800	4,000
453,590.0	*182.9*	*243.6*	*274.3*	*335.0*	*548.6*	*1,219.4*

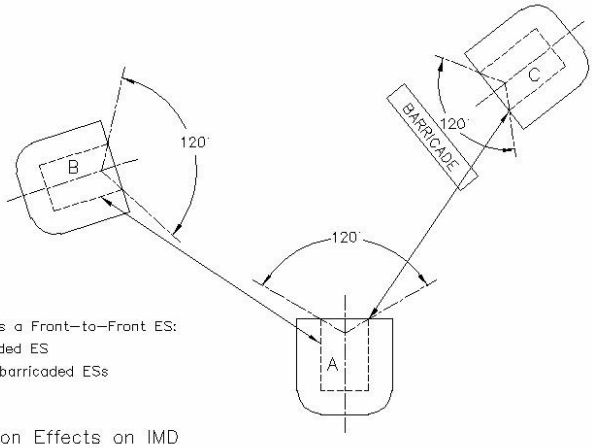

NOTE:

1. Site each magazine as a Front-to-Front ES:
   Site C as a Barricaded ES
   Site A and B as unbarricaded ESs

C9.F4. ECM Orientation Effects on IMD (see pararaph C9.4.1.5)

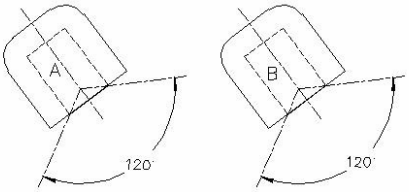

NOTES:

1. Site A as a Side-to-Front (unbarricaded) ES.
2. Site B as a Front (unbarricaded)-to-side ES.

C9.F5. ECM Orientation Effects on IMD: Canted ECM (see paragraph C9.4.1.5)

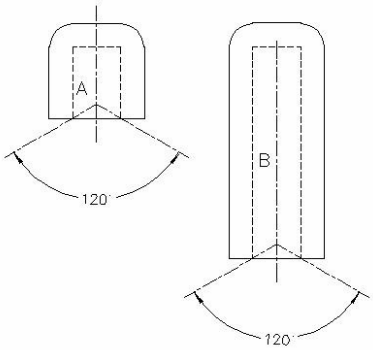

NOTES:

1. Site A as a Side-to-Front (unbarricaded) ES.
2. Site B as a Front (unbarricaded)-to-side ES.

C9.F6. ECM Orientation Effects on IMD: ECM of Significantly Different Lengths (see pararaph C9.4.1.5)

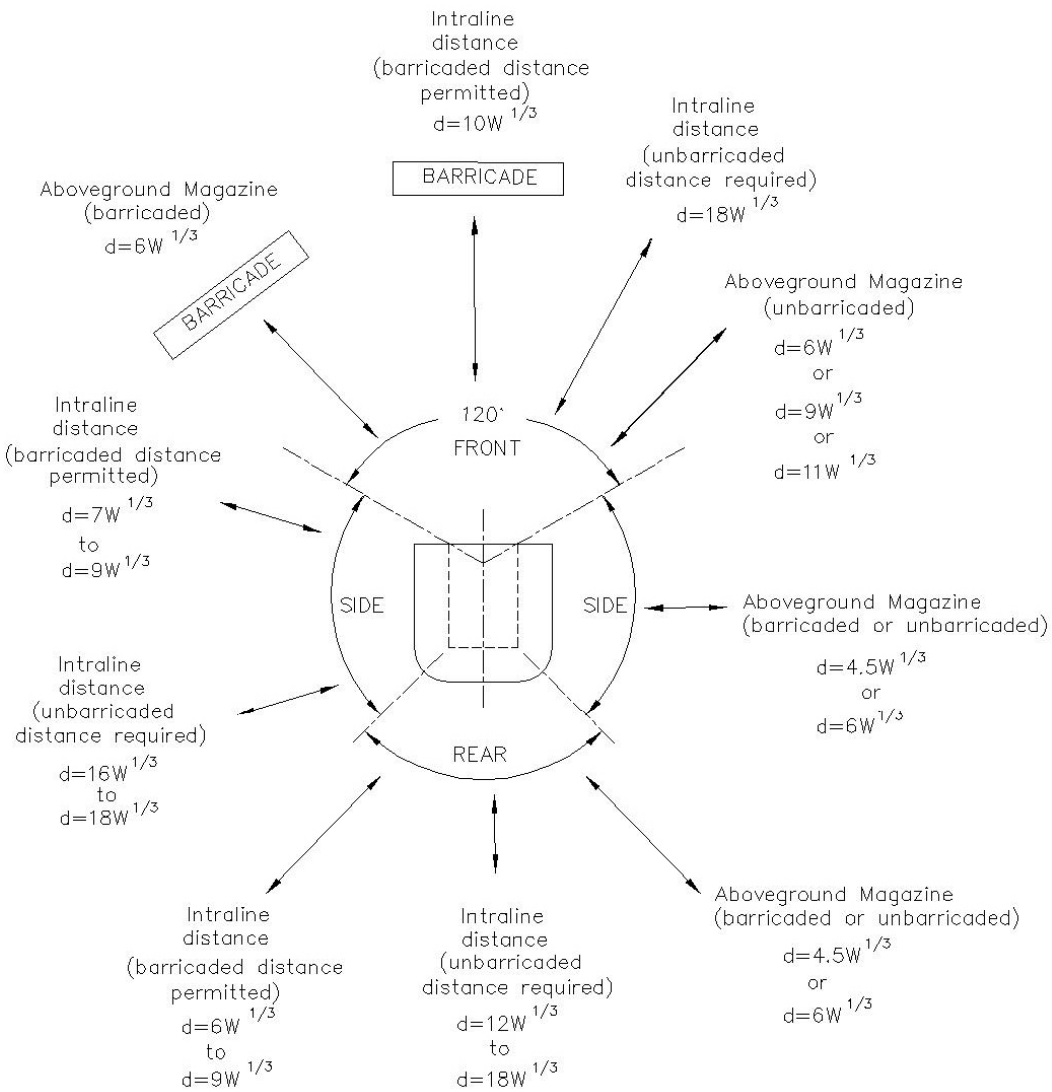

NOTES:

1. See C9.4.1.4.1. for application of intraline distances from an ECM.
2. See C9.4.1.5.2. for application of barricaded IMD and ILD from an ECM.
3. See C9.T6. for application of intermagazine distances between ECM and Aboveground Magazines.

C9.F7. ECM Orientation Effects on Barricaded and Unbarricaded IMD and ILD.

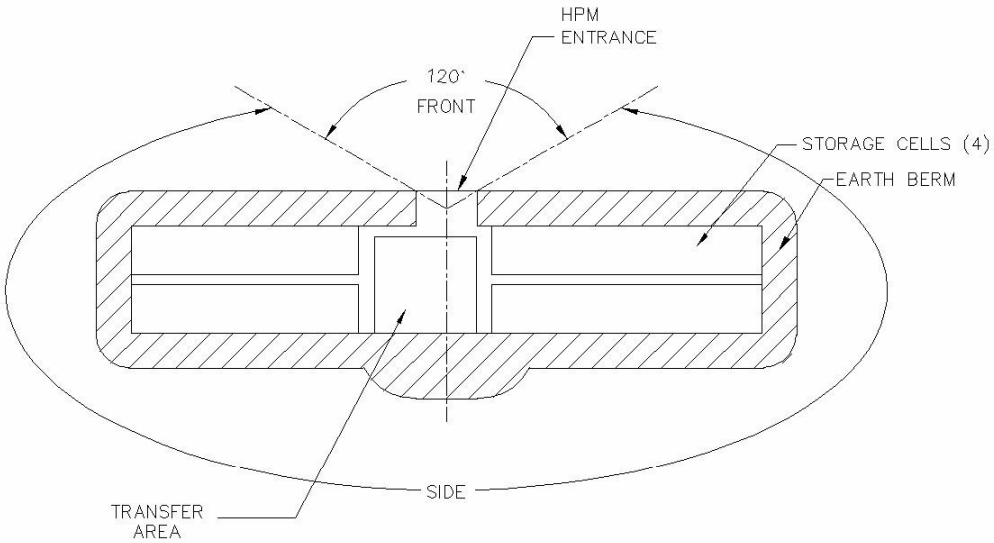

NOTES:

1. As an ES: Treat all exposures as sides.
2. As a PES: The HPM has a front, and all other exposures are considered sides.
3. See C9.4.1.3 for IBD/PTR criteria, C9.4.1.4 for ILD criteria, and C9.4.1.5 for IMD criteria associated with an HPM.

C9.F8. High Performance Magazine (HPM) Orientation Effects

C9.4.2. HD 1.2

C9.4.2.1. General

C9.4.2.1.1. HD 1.2 are items configured for storage and transportation that do not mass detonate when a single item or package in a stack is initiated. Explosions involving the items result in their burning and exploding progressively with no more than a few at a time reacting. These reactions will project fragments, firebrands, and unexploded items from the explosion site. Blast effects are limited to the immediate vicinity and are not the primary hazard.

C9.4.2.1.2. Small quantities of HD 1.2.1 ($\leq$ 450 pounds NEWQD [204 kg],), in certain packaging configurations, will react in a manner more typical of an HD 1.1 event. When located in structures that stop primary fragments, but which generate a secondary debris hazard (e.g., certain ECM and hardened structures), the structural damage and debris hazards produced from these events are more characteristic of an HD 1.1 explosion, rather than the progressive nature of an HD 1.2.1 event. When the NEWQD and the MCE of the packaged HD 1.2.1 items fall within the ranges specified in equation {NEWQD $\leq$ MCE $\leq$ 450 lbs [204 kg]}, the HD 1.2.1 shall be treated as HD 1.1 and the criteria of subparagraph C9.4.1.2.1.1.1., as applicable, shall be used. If they fall outside the ranges of the equation, then the criteria of Table C9.T8. shall be applied.

C9.4.2.2. The NEW of an HD 1.2 item (used for transportation) is the sum of the weight of the HD 1.1 and 1.3 material contained within the item. The NEWQD for an item is equal to NEW (NEWQD = NEW) unless testing has been conducted. Based on testing, the NEWQD may include a reduced contribution (less than or equal to 100 percent) from the HD 1.3 material as a result of the HD 1.1 material being functioned. The NEWQD should be determined by the Single Package Test (UN Test 6 (a) or its equivalent), not the Bonfire Test (UN Test 6 (c)). The NEWQD for a specific item may be obtained from the JHCS. The effects produced by the functioning of HD 1.2 items vary with the size and weight of the item. HD 1.2 AE is separated into two subdivisions in order to account for the differences in magnitude of these effects for purposes of setting QD criteria. The more hazardous items are referred to as HD 1.2.1 items. The less hazardous items are referred to as HD 1.2.2. These two HD 1.2 subdivisions are shown below with their definitions (NOTE: It is important not to exaggerate the significance of the value of 1.60 lbs [0.73 kg] used above. It is based on a break point in the database supporting the quantity-distance relationships and tables and the NEWQD of the rounds tested. If comprehensive data are available for a particular item, then the item may be placed in that category of HD 1.2 supported by the data and allocated the relevant quantity-distances.):

C9.4.2.2.1. HD 1.2.1: NEWQD > 1.60 lbs [0.73 kg]

C9.4.2.2.2. HD 1.2.2: NEWQD $\leq$ 1.60 lbs [0.73 kg]

C9.4.2.3. The MCE for HD 1.2.1 is the NEWQD of an item times the number of items in three unpalletized, outer shipping packages, unless a different MCE is demonstrated by testing or analogy. The authorized MCE for a specific HD 1.2.1 item is listed in the JHCS.

C9.4.2.4. The QD specified for HD 1.2 AE achieve the desired degree of protection against immediate hazards from an incident. Events involving HD 1.2 items lob large amounts of unexploded rounds, components, and subassemblies, which will remain hazardous after impact. Such items are likely to be more hazardous than in their original state because of possible damage to fuze safety devices or other features by heat and impact. Many types of AE containing sub-munitions, such as cluster bombs, can be expected to be projected out to distances as great as the relevant inhabited building distances. Furthermore, it is impractical to specify quantity distances, which allow for the maximum possible flight ranges of propulsive items.

C9.4.2.5. Table C9.T8. provides a summary matrix of all the appropriate IBD, PTRD, and ILD separations for HD 1.2.1 and HD 1.2.2 AE, for the various combinations of ES and PES. When HD 1.2.1 items are stored in structures that may contribute to the debris hazard, the IBD is determined by using the larger of the following two distances: either that given in Table C9.T9. for the appropriate Explosive Weight (number of items x NEWQD) or that given in Table C9.T10. for the appropriate MCE. (Hazardous Debris Distance (HDD) specified in Table C9.T10. equates to IBD.)

C9.4.2.6. IMD are dependent upon the types of structures acting as both the PES and the ES.

C9.4.2.7. PTRD given in Tables C9.T8. through C9.T11. give consideration to the transient nature of the exposure in the same manner as for HD 1.1. PTRD is computed as 60 percent of the IBD for items in this HD, with minimum distances specified in Table C9.T8.

C9.4.2.8. ILD given in Tables C9.T8. through C9.T11. take into account the progressive nature of explosions involving these items (normally resulting from fire spread), up to the magnitude of the MCE, and the ability to evacuate personnel from endangered areas before the progression involves large numbers of items. Exposed structures may be extensively damaged by projections and delayed propagation of explosions may occur due to the ignition of combustibles by projections. ILD is computed as 36 percent of the IBD for items of this HD, with a minimum distance equal to the IMD given in Table C9.T8. for the applicable PES-ES combination.

C9.4.2.9. When storing mixed subdivisions of HD 1.2 AE (HD 1.2.1 and HD 1.2.2), the following rule shall apply: Consider each subdivision separately and apply the greater of the two distances. The general mixing rules for HD 1.2 AE are given in Table C9.T12.

C9.4.2.10. For reasons of operational necessity, limited quantities of HD 1.2.2 items may be stored in facilities such as hangars, troop buildings, and manufacturing or operating buildings without regard to quantity distance. Fragmentation shielding shall be provided.

C9.4.2.11. HD 1.2.3 is a special storage subdivision for HD 1.2 AE (see subparagraph C3.2.1.2.3.).

C9.4.2.12. The IBD for HD 1.2.3 is determined using Table C9.T13. (HD 1.3 QD) for the NEWQD of the HD 1.2.3 item multiplied by the number of rounds present, but with a minimum IBD determined as follows:

Table C9.T8. Summary of HD 1.2.1, 1.2.2, and 1.2.3 QD

To EXPOSED SITE (ES)		From POTENTIAL EXPLOSION SITE (PES)				
		ECM		AGS		
		S or R	F	(H)	(H/R)	(L)
ECM (7 bar/3 bar) (IMD)	**S**	0 (note 1)	0 (note 1)	0 (note 1)	0 (note 1)	0 (note 1)
	R	0 (note 1)	0 (note 1)	0 (note 1)	0 (note 1)	0 (note 1)
	FU	0 (note 1)	0 (note 1)	0 (note 1)	0 (note 1)	0 (note 1)
	FB	0 (note 1)	0 (note 1)	0 (note 1)	0 (note 1)	0 (note 1)
ECM (Undefined) (IMD)	**S**	0 (note 1)	0 (note 1)	0 (note 1)	0 (note 1)	0 (note 1)
	R	0 (note 1)	0 (note 1)	0 (note 1)	0 (note 1)	0 (note 1)
	FU	0 (note 1)	200/300/100 *61.0/91.4/30.5*	200/300/100 *61.0/91.4/30.5*	200/300/100 *61.0/91.4/30.5*	200/300/100 *61.0/91.4/30.5*
	FB	0 (note 1)	0 (note 1)	0 (note 1)	0 (note 1)	0 (note 1)
AGS (H/R) (IMD)	**U or B**	0 (note 1)	0 (note 1)	0 (note 1)	0 (note 1)	0 (note 1)
AGS (H or L) (IMD)	**U or B**	0 (note 1)	200/300/100 *61.0/91.4/30.5*	200/300/100 *61.0/91.4/30.5*	200/300/100 *61.0/91.4/30.5*	200/300/100 *61.0/91.4/30.5*
ILD[5]		0 (Note 1)	Note 2	Note 2	Note 2	Note 2
PTRD[5]		200/300/100 *61.0/91.4/30.5*	Note 3	Note 3	Note 3	Note 3
IBD[5]		200/300/100 *61.0/91.4/30.5*	Note 4	Note 4	Note 4	Note 4

Legend for Table C9.T8.:

AGS (H)—Aboveground Structure, Heavy Wall; Buildings with wall thickness ≥ 12 inches (304.8 mm) of reinforced concrete; as an ES, door must be barricaded if it faces a PES.
AGS (H/R)—Aboveground Structure, Heavy Wall and Roof; AGS (H) with roof thickness > 5.9 inches (149.9 mm) of reinforced concrete; as an ES, door must be barricaded if it faces a PES; side/rear exposures may or may not be barricaded.
AGS (L)—Aboveground Structure, Light; Light structure, open stack, truck, trailer, or railcar (open stacks—see Note 4).

Notes for Table C9.T8.:

1. Practical considerations such as firefighting and security will dictate specific separation distances as specified by DoD Component.
2. ILD = 36 percent of IBD with a minimum distance equal to the IMD given in this table for the applicable PES-ES combination.
3. PTRD = 60 percent of IBD with a minimum distance equal to the IMD given in this table for light structures, open stacks, trucks, trailers, or rail cars. Such structures are designated as AGS (L).
4. For HD 1.2.1 items in any structure, truck, trailer, or railcar, use the larger of the two applicable values given in Tables C9.T9. and C9.T10.; for HD 1.2.1 items in the open, use Table C9.T9.; for HD 1.2.2 items, use Table C9.T11.
5. See subparagraph C9.4.2.12. for HD 1.2.3.
6. When the NEWQD and the MCE of the packaged HD 1.2.1 items fall within the ranges specified in equation {NEWQD ≤ MCE ≤ 450 lbs [204 kg]}, the HD 1.2.1 shall be treated as HD 1.1 and the criteria of subparagraph C9.4.1.2.1.1.1., as applicable, shall be used (see subparagraph C9.4.2.1.2.).

General Comments for Table C9.T8.:

(a) For PES-ES combinations where three distances are given: the first refers to a PES containing HD 1.2.1 AE with an MCE < 100 lbs [45.4 kg]; the second to a PES containing HD 1.2.1 AE with an MCE ≥ 100 lbs [45.4 kg]; and the third refers to a PES containing HD 1.2.2 AE. Where three IMD are given, the IMD from a PES containing only HD 1.2.3 AE to an ES containing other than HD 1.2.3 is K11 [4.36] based on the NEWQD of a single round of the largest (greatest NEWQD) HD 1.2.3 AE in the PES.

(b) For an ES containing only HD 1.2.3 items, the IMD from any PES to such an ES is 0 (Note 1).

Table C9.T9. HD 1.2.1 QD (IBD, PTR, ILD) for AE With NEWQD > 1.60 lbs [0.73 kg]

EXPLOSIVE WEIGHT[1] **(lbs)** ***[kg]***	**IBD[2,3,4]** **(ft)** ***[m]***	**PTRD[5]** **(ft)** ***[m]***	**ILD[6]** **(ft)** ***[m]***
2	200	200	200
0.9	*61.0*	*61.0*	*61.0*
3	200	200	200
1.4	*61.0*	*61.0*	*61.0*
4	200	200	200
1.8	*61.0*	*61.0*	*61.0*
5	200	200	200
2.3	*61.0*	*61.0*	*61.0*
7	200	200	200
3.2	*61.0*	*61.0*	*61.0*
10	200	200	200
4.5	*61.0*	*61.0*	*61.0*
15	200	200	200
6.8	*61.0*	*61.0*	*61.0*
20	200	200	200
9.1	*61.0*	*61.0*	*61.0*
30	200	200	200
13.6	*61.0*	*61.0*	*61.0*
50	200	200	200
22.7	*61.0*	*61.0*	*61.0*
70	200	200	200
31.8	*61.0*	*61.0*	*61.0*
100	268	200	200
45.4	*81.7*	*61.0*	*61.0*
150	348	209	200
68.0	*106.0*	*63.6*	*61.0*
200	403	242	200
90.7	*123.0*	*73.8*	*61.0*
300	481	288	200
136.1	*146.5*	*87.9*	*61.0*
500	576	346	207
226.8	*175.5*	*105.3*	*63.2*
700	638	383	230
317.5	*194.3*	*116.6*	*70.0*
1,000	702	421	253
453.6	*213.9*	*128.3*	*77.0*

Table C9.T9. HD 1.2.1 QD (IBD, PTR, ILD) for AE With NEWQD > 1.60 lbs [0.73 kg] (continued)

EXPLOSIVE WEIGHT[1] (lbs) *[kg]*	**IBD[2,3,4] (ft)** *[m]*	**PTRD[5] (ft)** *[m]*	**ILD[6] (ft)** *[m]*
1,500	774	464	278
680.4	*235.8*	*141.5*	*84.9*
2,000	824	494	296
907.2	*251.0*	*150.6*	*90.4*
3,000	893	536	321
1,361	*272.1*	*163.3*	*98.0*
5,000	978	587	352
2,268	*298.1*	*178.9*	*107.3*
7,000	1,033	620	372
3,175	*314.8*	*188.9*	*113.3*
10,000	1,090	654	392
4,536	*332.3*	*199.4*	*119.6*
15,000	1,154	692	415
6,804	*351.7*	*211.0*	*126.6*
20,000	1,198	719	431
9,072	*365.2*	*219.1*	*131.5*
30,000	1,260	756	453
13,608	*383.9*	*230.3*	*138.2*
50,000	1,335	801	481
22,680	*406.8*	*244.1*	*146.4*
70,000	1,383	830	498
31,751	*421.5*	*252.9*	*151.7*
100,000	1,433	860	516
45,359	*436.8*	*262.1*	*157.3*
150,000	1,489	893	536
68,039	*453.8*	*272.3*	*163.4*
200,000	1,528	917	550
90,718	*465.6*	*279.3*	*167.6*
300,000	1,581	949	569
136,077	*481.8*	*289.1*	*173.5*
500,000	1,646	988	593
226,795	*501.7*	*301.0*	*180.6*
>500,000	NOTE 4	NOTE 5	NOTE 6
>226,795	*NOTE 4*	*NOTE 5*	*NOTE 6*

Notes for Table C9.T9.:

1. Explosive Weight = Number of Items x NEWQD.
2. IBD in ft, NEWQD in lbs; ln is natural logarithm
   [71 lbs < explosive weight]
   IBD = -735.186 + [237.559 x (ln(Number of items x NEWQD))] - [4.274 x (ln(Number of items x NEWQD))^2],
   with a minimum of 200 ft [English EQN C9.T9-1]
   IBD in m, NEWQD in kg; ln is natural logarithm.
   [18.6 kg < explosive weight]
   IBD = -167.648 + [70.345 x (ln(Number of items x NEWQD))] - [1.303 x (ln(Number of items x NEWQD))^2],
   with a minimum of 61.0 m [Metric EQN C9.T9-2]
3. IBD in ft, NEWQD in lbs; exp (x) is e^x
   [200 ft < IBD < 2016 ft]
   Number of items x NEWQD = exp[27.791 - (600.392 - 0.234 x IBD)$^{1/2}$]; [English EQN C9.T9-3]
   IBD in m, NEWQD in kg; exp (x) is e^x
   [61.0 m < IBD < 614.5 m]
   Number of items x NEWQD = exp[27.000 – (600.287 – 0.768 x IBD)$^{1/2}$]; [Metric EQN C9.T9-4]
4. Use of equations given in Notes (2) and (3) to determine other IBD-weight combinations is allowed.
5. PTRD = 60 percent of IBD with a minimum distance equal to the IMD given in Table C9.T8. for AGS (L) in. For other structures as either ES or PES, see Table C9.T8.
6. ILD = 36 percent of IBD with a minimum distance equal to the IMD given in Table C9.T8. for the applicable PES-ES combination. For structures other than AGS (L) as either ES or PES, see Table C9.T8.

General Comments for Table C9.T9.:

(a) The QD criteria for HD 1.2.1 items are based on the hazards from primary fragments. When stored in structures that may contribute to the debris hazard (secondary fragments), the IBD for HD 1.2.1 items whose MCE is greater than 31 lbs [14.1 kg] is determined by using the larger of two distances: those given in this table for the appropriate explosive weight or those given in Table C9.T10. for the appropriate MCE. Structures that may contribute to the debris hazard for storage of HD 1.2.1 AE include: (a) all ECM frontal exposures (side and rear exposures have fixed minimum distances for IBD); (b) all AGS, including heavy wall (H), heavy wall and roof (H/R), and light (L) as defined in C9.T8., unless data/analyses are provided to show that the structural debris contribution is less. Note that ILD and PTRD are based on 36 percent and 60 percent, respectively, of the applicable IBD as determined in this note with minimum distances of: ILD minimum distances are given in Table C9.T8. for applicable PES-ES combinations and PTR minimum distances are given in Table C9.T8. for AGS (L).

(b) See Table C9.T8. for a summary of IMD and minimum distances for ILD and PTRD.

Table C9.T10. HDD for HD 1.2.1 AE Stored in Structures That Can Contribute to the Debris Hazard

MCE (lbs) *[kg]*	**HAZARDOUS DEBRIS DISTANCE[1, 2 ,3]** (ft) *[m]*	**PTRD[4]** (ft) *[m]*	**ILD[5]** (ft) *[m]*
≤ 31	200	200	200
≤14.1	*61.0*	*61.0*	*61.0*
50	388	233	200
22.7	*118.2*	*70.9*	*61.0*
70	519	311	200
31.8	*158.1*	*94.9*	*61.0*
100	658	395	237
45.4	*200.4*	*120.2*	*72.1*
150	815	489	293
68.0	*248.5*	*149.1*	*89.4*
200	927	556	334
90.7	*282.6*	*169.5*	*101.7*
300	1085	651	391
136.1	*330.6*	*198.4*	*119.0*
400	1197	718	431
181.4	*364.7*	*218.8*	*131.3*
450	1243	746	447
204.1	*378.7*	*227.2*	*136.3*
>450	1250	750	450
>204.1	*381.0*	*228.6*	*137.2*

Notes for Table C9.T10.:

1. MCE in lbs, HDD in ft; ln is natural logarithm;
   [31 lbs < MCE ≤ 450 lbs]
   HDD = -1133.9 + [389 x ln(MCE)] [English EQN C9.T10-1]
   with a minimum distance of 200 ft.
   MCE in kg, HDD in m; ln is natural logarithm
   [14.1 kg < MCE ≤ 204 kg]
   HDD = -251.87 + [118.56 x ln(MCE)] [Metric EQN C9.T10-2]
   with a minimum distance of 61 m.
2. MCE in lbs, HDD in ft; exp [x] is e^x
   [200 ft < HDD ≤ 1250 ft]
   MCE = exp [(HDD/389) + 2.914] [English EQN C9.T10-3]
   MCE in kg, HDD in m; exp [x] is e^x.
   [61.0 m < HDD ≤ 381 m]
   MCE = exp [(HDD/118.56) + 2.1244] [Metric EQN C9.T10-4]
3. Use of equations given in Notes (1) and (2) to determine other HDD-MCE combinations is allowed.
4. PTRD = 60 percent of IBD with a minimum distance equal to the IMD given in Table C9.T8. for AGS (L). For other structures as either ES or PES, see Table C9.T8.
5. ILD = 36 percent of IBD with a minimum distance equal to the IMD given in Table C9.T8. for the applicable PES-ES combination. For structures other than AGS (L) as either ES or PES, see Table C9.T8.

General Comments for Table C9.T10.:

(a) The QD criteria for HD 1.2.1 items are based on the hazards from primary fragments. When stored in structures that may contribute to the debris hazard (secondary fragments), the IBD for HD 1.2.1 items whose MCE is greater than 31 pounds [14.1 kg] is determined by using the larger of two distances: those given in Table C9.T9. for the appropriate explosive weight or those given in this table for the appropriate MCE. Structures that may contribute to the debris hazard for storage of HD 1.2.1 AE include: (a) all ECM frontal exposures (side and rear exposures have fixed minimum distances for IBD); (b) all AGS, including H, H/R, and L as defined in Table C9.T8., unless data/analyses are provided to show that the structural debris contribution is less. Note that ILD and PTRD are based on 36 percent and 60 percent respectively, of the applicable IBD as determined in this note. ILD minimum distances are given in Table C9.T8. for applicable PES-ES combinations, and PTR minimum distances are given in Table C9.T8. for AGS (L).

(b) See Table C9.T8. for a summary of IMD and minimum distances for ILD and PTRD.

Table C9.T11. HD 1.2.2 QD (IBD, PTR, ILD) for AE With NEWQD < 1.60 lbs [0.73 kg]

EXPLOSIVE WEIGHT[1] (lbs) *[kg]*	**IBD[2,3,4] (ft)** *[m]*	**PTRD[5] (ft)** *[m]*	**ILD[6] (ft)** *[m]*
1	100	100	100
0.45	*30.5*	*30.5*	*30.5*
1.5	100	100	100
0.68	*30.5*	*30.5*	*30.5*
2	100	100	100
0.9	*30.5*	*30.5*	*30.5*
3	100	100	100
1.4	*30.5*	*30.5*	*30.5*
5	100	100	100
2.3	*30.5*	*30.5*	*30.5*
7	100	100	100
3.2	*30.5*	*30.5*	*30.5*
10	100	100	100
4.5	*30.5*	*30.5*	*30.5*
15	100	100	100
6.8	*30.5*	*30.5*	*30.5*
20	100	100	100
9.1	*30.5*	*30.5*	*30.5*
30	107	100	100
13.6	*32.7*	*30.5*	*30.5*
50	118	100	100
22.7	*36.1*	*30.5*	*30.5*
70	127	100	100
31.8	*38.8*	*30.5*	*30.5*
100	138	100	100
45.4	*42.1*	*30.5*	*30.5*
150	152	100	100
68.0	*46.2*	*30.5*	*30.5*
200	162	100	100
90.7	*49.5*	*30.5*	*30.5*
300	179	107	100
136.1	*54.6*	*32.7*	*30.5*
500	202	121	100
226.8	*61.7*	*37.0*	*30.5*
700	219	132	100
317.5	*66.8*	*40.1*	*30.5*

Table C9.T11. HD 1.2.2 QD (IBD, PTR, ILD) for AE With NEWQD < 1.60 lbs [0.73 kg] (continued)

EXPLOSIVE WEIGHT[1] (lbs)	**IBD[2,3,4] (ft)**	**PTRD[5] (ft)**	**ILD[6] (ft)**
[kg]	***[m]***	***[m]***	***[m]***
1,000	238	143	100
453.6	*72.7*	*43.6*	*30.5*
1,500	262	157	100
680.4	*79.8*	*47.9*	*30.5*
2,000	279	168	101
907.2	*85.2*	*51.1*	*30.7*
3,000	306	183	110
1,361	*93.2*	*55.9*	*33.5*
5,000	341	205	123
2,268	*104.0*	*62.4*	*37.4*
7,000	366	220	132
3,175	*111.6*	*67.0*	*40.2*
10,000	394	236	142
4,536	*120.0*	*72.0*	*43.2*
15,000	427	256	154
6,804	*130.1*	*78.1*	*46.8*
20,000	451	271	162
9,072	*137.5*	*82.5*	*49.5*
30,000	487	292	175
13,608	*148.5*	*89.1*	*53.5*
50,000	535	321	193
22,680	*163.0*	*97.8*	*58.7*
70,000	568	341	204
31,751	*173.1*	*103.8*	*62.3*
100,000	604	362	217
45,359	*184.1*	*110.5*	*66.3*
150,000	647	388	233
68,039	*197.1*	*118.3*	*71.0*
200,000	678	407	244
90,718	*206.6*	*124.0*	*74.4*
300,000	723	434	260
136,077	*220.5*	*132.3*	*79.4*
500,000	783	470	282
226,795	*238.8*	*143.3*	*86.0*
>500,000	Note 4	Note 5	Note 6
>226,795	*Note 4*	*Note 5*	*Note 6*

Notes for Table C9.T11.:

1. Explosive Weight = Number of Items x NEWQD.
2. IBD in ft, NEWQD in lbs; ln is natural logarithm.
   [20 lbs < Explosive Weight]
   IBD = 101.649 - [15.934 x (ln(Number of items x NEWQD))] + [5.173 x (ln(Number of items x NEWQD))^2],
   with a minimum of 100 ft [English EQN C9.T11-1]
   IBD in m, NEWQD in kg; ln is natural logarithm
   [9.1 kg < Explosive Weight]
   IBD = 28.127 - [2.364 x (ln(Number of items x NEWQD))] + [1.577 x (ln(Number of items x NEWQD))^2]
   with a minimum of 30.5 m [Metric EQN C9.T11-2]
3. IBD in ft, NEWQD in lbs; exp (x) is e^x.
   [100 ft <IBD < 1240 ft]
   Number of items x NEWQD = exp [1.5401 + (-17.278 + 0.1933 x IBD)$^{1/2}$] [English EQN C9.T11-3]
   IBD in m, NEWQD in kg; exp (x) is e^x.
   [30.5 m <IBD < 378 m]
   Number of items x NEWQD = exp [0.7495 + (-17.274 + 0.6341 x IBD)$^{1/2}$] [Metric EQN C9.T11-4]
4. Use of equations given in Notes (2) and (3) to determine other IBD-weight combinations is allowed
5. PTRD = 60 percent of IBD with a minimum distance equal to the IMD given in Table C9.T8. for AGS (L). For other structures as either ES or PES, see Table C9.T8.
6. ILD = 36 percent of IBD with a minimum distance equal to the IMD given in Table C9.T8. for the applicable PES-ES combination. For structures other than AGS (L) as either ES or PES, see Table C9.T8.

General Comments for Table C9.T11.:

(a) The QD criteria for HD 1.2.2 items are based on the hazards from primary fragments.
(b) See Table C9.T8. for a summary of IMD and minimum distances for ILD and PTRD.
(c) For operational necessity, limited quantities of HD 1.2.2 may be stored without regards to QD. See subparagraph C9.4.2.10.

Table C9.T12. HD 1.2.1, 1.2.2, and 1.2.3 Mixing Rules

HAZARD SUB-DIVISION INVOLVED	DISTANCES TO BE APPLIED
1.2.1	Apply HD 1.2.1 distances[1]
1.2.2	Apply HD 1.2.2 distances[2]
1.2.3	Apply HD 1.2.3 distances[3]
1.2.1 + 1.2.2	Apply greater of two distances
1.2.1 + 1.2.3	Apply greater of two distances
1.2.2 + 1.2.3	Apply greater of two distances

Notes for Table C9.T12.:

1. HD 1.2.1 distances given in Tables C9.T8., C9.T9, and C9.T10.
2. HD 1.2.2 distances given in Tables C9.T8. and C9.T11.
3. HD 1.2.3 distances given in Table C9.T13. (See subparagraph C9.4.2.12.)

C9.4.2.12.1. If the AE are in a structure that can interrupt primary fragments and can contribute debris, the minimum IBD is the hazardous debris distance given in Table C9.T10. for an MCE equal to the NEWQD of a single round.

C9.4.2.12.2. If the AE are in the open or in a light structure that will not interrupt primary fragments, the minimum IBD is the HFD based on the HD 1.1 hazardous fragment areal number density criteria applied to a single HD 1.2.3 item. The HFD applicable to AE in the open is specified in hundreds of ft in parentheses as "(xx) HD 1.2.3."

C9.4.2.12.3. As an alternative to the preceding HD 1.2.3 QD criteria, when an increase in the allowable quantity or a reduction in the required distance will result, HD 1.2.3 AE may be treated as follows:

C9.4.2.12.3.1. If the single-round NEWQD is > 1.6 lbs [0.73 kg], consider the items as HD 1.2.1. Use the total NEWQD present, with an MCE equal to the NEWQD of one round to determine the maximum QD.

C9.4.2.12.3.2. If the single-round NEWQD is $\leq$ than 1.6 lbs [0.73 kg], consider the items as HD 1.2.2, based on the total NEWQD present.

C9.4.2.13. For storage of mixed HD 1.2.3 AE, multiply the NEWQD for the HD 1.2.3 items by the corresponding number of HD 1.2.3 rounds and use Table C9.T13. with the HFD for the mixture based on the largest HFD for the HD 1.2.3 AE in storage. Use the distances given in Table C9.T12., when HD 1.2.3 AE is located with any other HD 1.2 sub-division. The HD 1.2.3 AE is considered HD 1.2 (HD 1.2.1 or HD 1.2.2, according to NEWQD) for QD purposes, when HD 1.2.3 AE is located with any other HD AE. The mixing rules provided in paragraph C9.2.2. then apply to the combination of the hazard divisions.

C9.4.3. HD 1.3. HD 1.3 includes items that burn vigorously with little or no possibility of extinguishment in storage situations. Explosions normally will be confined to pressure ruptures of containers and will not produce propagating shock waves or damaging blast overpressure beyond the magazine distance specified in Table C9.T13. A severe hazard of spread of fire may result from tossing about of burning container materials, propellant, or other flaming debris.

C9.4.4. HD 1.4

C9.4.4.1. HD 1.4 AE present a fire hazard with minimal blast, fragmentation, or toxic hazards. Separate facilities for storage and handling of these AE shall be located IAW Table C9.T14.

C9.4.4.2. In mixed storage, the NEWQD of HD 1.4 is not additive (see subparagraph C9.2.2.1.1.). However, QD criteria for each HD present, including HD 1.4, must be determined and the largest value shall be used.

C9.4.4.3. HD 1.4S AE (see paragraph C2.5.5.) may be stored (including associated handling) without regard to the QD criteria in Table C9.T14.

C9.4.5. HD 1.6. QD separations for HD 1.6 AE shall be based on the storage location and configuration. This information is detailed in Table C9.T15. and its footnotes. A maximum of 500,000 lbs [226,795 kg] NEWQD shall be permitted at any one location. Any special storage configuration and siting approved for HD 1.1 AE may be used for storage of like explosive weights of HD 1.6 AE.

C9.4.6. HD 6.1

C9.4.6.1. HD 6.1 includes items that contain only toxic chemical or riot control agents. AE containing both explosives and toxic chemical or riot control agents may be hazard classified as HD 1.1 through HD 1.4, based on testing IAW Reference (e).

C9.4.6.2. Hazard zones for toxic chemical agents are determined by the relative toxicity of the agents, the amount released to the atmosphere and the rate at which they are released (that is, evaporation, pressure, or explosive dispersal), terrain features, and meteorological conditions. Hazard zone calculations are based on MCE, using DDESB TP No. 10 (Reference (q)). (See Chapter 11 for specific criteria associated with toxic chemical agents.)

C9.4.6.3. When siting AE containing toxic chemical agents, both the explosives and toxic chemical agent hazards shall be evaluated with the greatest QD governing siting.

Table C9.T13. HD 1.3 QD

NEWQD (lbs) *[kg]*	**IBD & PTRD[1] (ft)** *[m]*	**Aboveground IMD & ILD[2] (ft)** *[m]*
≤ 1000[3]	75	50
≤ 453.59[3]	22.9	*15.2*
1,500	82	56
680.4	25.0	*17.0*
2,000	89	61
907.2	27.2	*18.5*
3,000	101	68
1,360.8	30.7	*20.8*
5,000	117	80
2,268.0	35.8	*24.3*
7,000	130	88
3,175.1	39.6	*26.9*
10,000	145	98
4,535.9	44.2	*30.0*
15,000	164	112
6,803.9	50.1	*34.0*
20,000	180	122
9,071.8	54.8	*37.2*
30,000	204	138
13,607.7	62.3	*42.2*
50,000	240	163
22,679.5	73.2	*49.5*
70,000	268	181
31,751.3	81.6	*55.1*
100,000	300	204
45,359.0	91.4	*62.0*
150,000	346	234
68,038.5	105.3	*71.4*
200,000	385	260
90,718.0	117.4	*79.3*
300,000	454	303
136,077.0	138.4	*92.5*
500,000	569	372
226,795.0	173.6	*113.4*
700,000	668	428
317,513.0	203.8	*130.5*
1,000,000	800	500
453,590.0	244.0	*152.3*
1,500,000	936	577
680,385.0	*285.3*	*175.8*
2,000,000	1,008	630
907,180.0	*307.2*	*192.0*

Notes for Table C9.T13.:

1. (NEWQD in lbs, d in ft)
   NEWQD $\leq$ 1,000 lbs
   $d_{IBD,PTRD} = 75$
   1,000 lbs < NEWQD $\leq$ 96,000 lbs
   $d_{IBD,PTRD} = \exp[2.47 + 0.2368*(\ln(NEWQD)) + 0.00384*(\ln(NEWQD))^2]$ [English EQN C9.T13-1]
   with a minimum distance of 75 ft
   96,000 lbs < NEWQD $\leq$ 1,000,000 lbs
   $d_{IBD,PTRD} = \exp[7.2297 - 0.5984*(\ln(NEWQD)) + 0.04046*(\ln(NEWQD))^2]$ [English EQN C9.T13-2]
   NEWQD > 1,000,000 lbs
   $d_{IBD,PTRD} = 8*NEWQD^{1/3}$ [English EQN C9.T13-3]
   (NEWQD in kg, d in m)
   NEWQD $\leq$ 453.6 kg
   $d_{IBD,PTRD} = 22.9$
   453.6 kg < NEWQD $\leq$ 43,544.6 kg
   $d_{IBD,PTRD} = \exp[1.4715 + 0.2429*(\ln(NEWQD)) + 0.00384*(\ln(NEWQD))^2]$ [Metric EQN C9.T13-4]
   with a minimum distance of 22.9 m
   43,544.6 kg < NEWQD $\leq$ 453,590 kg
   $d_{IBD,PTRD} = \exp[5.5938 - 0.5344*(\ln(NEWQD)) + 0.04046*(\ln(NEWQD))^2]$ [Metric EQN C9.T13-5]
   NEWQD > 453,590 kg
   $d_{IBD,PTRD} = 3.17*NEWQD^{1/3}$ [Metric EQN C9.T13-6]
   75 ft $\leq d_{IBD,PTRD} \leq$ 296 ft
   $NEWQD = \exp[-30.833 + (307.465 + 260.417*(\ln(d_{IBD,PTRD})))^{1/2}]$ [English EQN C9.T13-7]
   with a minimum NEWQD of 1,000 lbs
   296 ft < $d_{IBD,PTRD} \leq$ 800 ft
   $NEWQD = \exp[7.395 + (-124.002 + 24.716*(\ln(d_{IBD,PTRD})))^{1/2}]$ [English EQN C9.T13-8]
   800 ft < $d_{IBD,PTRD}$
   $NEWQD = d_{IBD,PTRD}^3/512$ [English EQN-C9.T13-9]
   22.9 m $\leq d_{IBD,PTRD} \leq$ 90.2 m
   $NEWQD = \exp[-31.628 + (617.102 + 260.417*(\ln(d_{IBD,PTRD})))^{1/2}]$ [Metric EQN C9.T13-10]
   with a minimum NEWQD of 453.6 kg
   90.2 m < $d_{IBD,PTRD} \leq$ 243.8 m
   $NEWQD = \exp[6.604 + (-94.642 + 24.716*(\ln(d_{IBD,PTRD})))^{1/2}]$ [Metric EQN C9.T13-11]
   243.8 m < $d_{IBD,PTRD}$
   $NEWQD = d_{IBD,PTRD}^3/131.964$ [Metric EQN C9.T13-12]

2. (NEWQD in lbs, d in ft)
   NEWQD $\leq$ 1,000 lbs
   $d_{IMD,ILD} = 50$
   1,000 lbs < NEWQD $\leq$ 84,000 lbs
   $d_{IMD,ILD} = \exp[2.0325 + 0.2488*(\ln(NEWQD)) + 0.00313*(\ln(NEWQD))^2]$ [English EQN C9.T13-13]
   with a minimum distance of 50 ft
   84,000 lbs < NEWQD $\leq$ 1,000,000 lbs
   $d_{IMD,ILD} = \exp[4.338 - 0.1695*(\ln(NEWQD)) + 0.0221*(\ln(NEWQD))^2]$ [English EQN C9.T13-14]
   1,000,000 lbs < NEWQD
   $d_{IMD,ILD} = 5*NEWQD^{1/3}$ [English EQN C9.T13-15]
   (NEWQD in kg, d in m)
   NEWQD $\leq$ 453.6 kg
   $d_{IMD,ILD} = 15.2$
   453.6 kg < NEWQD $\leq$ 38,101,6 kg
   $d_{IMD,ILD} = \exp[1.0431 + 0.2537*(\ln(NEWQD)) + 0.00313*(\ln(NEWQD))^2]$ [Metric EQN C9.T13-16]
   with a minimum distance of 15.2 m
   38,101.6 kg < NEWQD $\leq$ 453,590 kg
   $d_{IMD,ILD} = \exp[3.0297 - 0.1346*(\ln(NEWQD)) + 0.0221*(\ln(NEWQD))^2]$ [Metric EQN C9.T13-17]
   NEWQD > 453,590 kg

$d_{IMD,ILD} = 1.98*NEWQD^{1/3}$ [Metric EQN C9.T13-18]

50 ft $\leq d_{IMD,ILD} \leq$ 192 ft

$NEWQD = \exp[-39.744 + (930.257 + 319.49*(\ln(d_{IMD,ILD})))^{1/2}]$ [English EQN C9.T13-19]

with a minimum NEWQD of 1,000 lbs

192 ft < $d_{IMD,ILD} \leq$ 500 ft

$NEWQD = \exp[3.834 + (-181.58 + 45.249*(\ln(d_{IMD,ILD})))^{1/2}]$ [English EQN C9.T13-20]

500 ft < $d_{IMD,ILD}$

$NEWQD = d_{IMD,ILD}^{3}/125$ [English EQN C9.T13-21]

15.2 m $\leq d_{IMD,ILD} \leq$ 58.4 m

$NEWQD = \exp[-40.527 + (1309.19 + 319.49*(\ln(d_{IMD,ILD})))^{1/2}]$ [Metric EQN C9.T13-22]

with a minimum NEWQD of 453.6 kg

58.4 m < $d_{IMD,ILD} \leq$ 152.4 m

$NEWQD = \exp[3.045 + (-127.817 + 45.249*(\ln(d_{IMD,ILD})))^{1/2}]$ [Metric EQN C9.T13-23]

152.4 m < $d_{IMD,ILD}$

$NEWQD = d_{IMD,ILD}^{3}/7.804$ [Metric EQN C9.T13-24]

3. For quantities less than 1,000 lbs [453.59 kg], the required distances are those specified for 1,000 lbs [453.59 kg]. The use of lesser distances may be approved when supported by test data and/or analysis.

General Comments for Table C9.T13.:

(a) For reasons of operational necessity, limited quantities of items in this hazard division, such as document destroyers, signaling devices, riot control munitions and the like, may be stored without regard to QD IAW fire protection regulations in facilities such as hangars, arms rooms, and manufacturing or operating buildings.

(b) ECM may be used to their physical capacity for this HD provided they comply with the construction and siting requirements of Chapters 5 and 9, respectively, for HD 1.1. ECM used to store only HD 1.3 items must be sited for a minimum of 100 lbs [45.4 kg] of HD 1.1 items using Tables C9.T4. (ILD) and C9.T6. (IM). Use IBD and PTRD columns of Table C9.T13. for determining the IBD and PTRD associated with the HD 1.3 being placed in such ECM.

Table C9.T14. HD 1.4 QD

NEWQD (lbs) *[kg]*	**IBD (ft)** *[m]*	**PTRD (ft)** *[m]*	**ILD[1] (ft)** *[m]*	**Aboveground IMD[1,2] (ft)** *[m]*	**ECM IMD[1] (ft)** *[m]*
≤ 3000[3,4]	75	75	50	50	0 out the Sides & Rear; use AGM distance out the Front
≤ 1,360.8[3,4]	*22.9*	*22.9*	*15.2*	*15.2*[1,2]	
>3000	100	100	50 (100)	50 (100)	
>1,360.8	*30.5*	*30.5*	*15.3 (30.5)*	*15.3 (30.5)*	
(No upper limit specifically required for safety reasons)			(Note: Use larger distance for combustible construction)	(Note: Use larger distance for combustible construction)	

Notes for Table C9.T14.:

1. Magazines storing only HD 1.4 AE may be located at these IMD or ILD from all other magazines or operating buildings regardless of the HD or NEWQD authorized in those adjacent structures. Because the HD 1.4 AE may be destroyed as the result of an accident involving the assets in those adjacent structures, the DoD Component on a case-by-case basis must accept application of this provision with consideration given to the value of HD 1.4 assets at risk.
2. HD 1.4 AE may be stored in a general supplies warehouse area rather than in an AE storage area. When storing in a general supplies warehouse area, any weatherproof warehouse structure may serve as an HD 1.4 magazine. Such a structure will be separated from all other warehouses by AGM distance.
3. For reasons of operational necessity, limited quantities of HD 1.4 AE (e.g., small arms AE and riot control munitions) may be stored within facilities (e.g., hangars, arms rooms, and operating buildings) without regard to QD. Alternatively, operationally necessary HD 1.4 AE may be stored in small magazines external to those facilities without regard to QD.
4. See subparagraph C9.2.2.1.1. for the applicability of HD 1.4 QD criteria and the determination of NEWQD when HD 1.4 and other HD AE are located in the same site.

Table C9.T15. HD 1.6 QD

NEWQD	Aboveground		ECM		
	IBD or PTRD[1,2,4]	IMD or ILD[1,3,4]	IBD or PTRD	ILD	IMD
(lbs)	(ft)	(ft)	(ft)	(ft)	(ft)
[kg]	*[m]*	*[m]*	*[m]*	*[m]*	*[m]*
≤100[5]	37	23	Note 4	Note 4	Note 4
≤ 453.9[5]	*11.3*	*7.0*			
150	43	27			
68.0	*12.9*	*8.1*			
200	47	29			
90.7	*14.3*	*8.9*			
300	54	33			
136.1	*16.3*	*10.2*			
500	63	40			
226.8	*19.4*	*12.1*			
700	71	44			
317.5	*21.7*	*13.5*			
1,000	80	50			
453.6	*24.4*	*15.2*			
1,500	92	57			
680.4	*27.9*	*17.4*			
2,000	101	63			
907.2	*30.7*	*19.2*			
3,000	115	72			
1,360.8	*35.2*	*22.0*			
5,000	137	85			
2,268.0	*41.7*	*26.1*			
7,000	153	96			
3,175.1	*46.6*	*29.2*			
10,000	172	108			
4,535.9	*52.5*	*32.8*			
15,000	197	123			
6,803.9	*60.1*	*37.6*			
20,000	217	136			
9,071.8	*66.2*	*41.4*			
30,000	249	155			
13,607.7	*75.8*	*47.4*			
50,000	295	184			
22,679.5	*89.8*	*56.1*			
70,000	330	206			
31,751.3	*100.5*	*62.8*			
100,000	371	232			
45,359.0	*113.2*	*70.7*			
150,000	425	266			
68,038.5	*129.6*	*81.0*			
200,000	468	292			
90,718.0	*142.6*	*89.1*			
300,000	536	335			
136,077.0	*163.2*	*102.0*			
500,000	635	397			
226,795.0	*193.5*	*121.0*			

Notes for Table C9.T15.:

1. Applicable minimum distances:
   For IBD or PTRD, based on the NEWQD for the largest single round of AE,
   D in ft, NEWQD in lbs:
   $D_{IBD,PTRD} = 40W^{1/3}$ [English EQN C9.T15-1]
   D in m, NEWQD in kg:
   $D_{IBD,PTRD} = 15.87Q^{1/3}$ [Metric EQN C9.T15-2]
   For IMD or ILD, based on the NEWQD for the largest single round of AE,
   D in ft, NEWQD in lbs:
   $D_{IMD, ILD} = 18W^{1/3}$ [English EQN C9.T15-3]
   D in m, NEWQD in kg:
   $D_{IMD, ILD} = 7.14Q^{1/3}$ [Metric EQN C9.T15-4]
2. D in ft, NEWQD in lbs:
   $D_{IBD,PTRD} = 8W^{1/3}$ [English EQN C9.T15-5]
   $NEWQD = D_{IBD,PTRD}^{3}/512$ [English EQN C9.T15-6]
   D in m, NEWQD in kg:
   $D_{IBD,PTRD} = 3.17Q^{1/3}$ [Metric EQN C9.T15-7]
   $NEWQD = D_{IBD,PTRD}^{3}/31.86$ [Metric EQN C9.T15-8]
3. D in ft, NEWQD in lbs:
   $D_{IMD, ILD} = 5W^{/3}$ [English EQN C9.T15-9]
   $NEWQD = D_{IMD, ILD}^{3}/125$ [English EQN C9.T15-10]
   D in m, NEWQD in kg :
   $D_{IMD, ILD} = 1.98Q^{1/3}$ [Metric EQN C9.T15-11]
   $NEWQD = D_{IMD, ILD}^{3}/7.76$ [Metric EQN C9.T15-12]
4. For HD 1.6 AE packed in non-flammable pallets or packing and stored in an ECM, provided it is acceptable to the DoD Component and the DDESB on a site-specific basis, these QD apply unless a lesser distance is permitted by Table C9.T15. for aboveground sites (NOTE: These lesser distances can be applied to ECM storage):
   $D_{IBD,PTRD}$ = 100 ft [30.5 m];
   D_{ILD} = 50 ft [15.2 m];
   D_{IMD} = no specific requirement.
5. For quantities less than 100 lbs [45.4 kg], the required distances are those specified for 100 lbs [45.4 kg]. The use of lesser distances may be approved when supported by test data and/or analyses.

C9.5. ENERGETIC LIQUIDS

C9.5.1. Scope and application

C9.5.1.1. This section applies to the storage of energetic liquids, listed in Table C9.T16., in all types of containers, including rocket and missile tankage. Laboratory quantities shall be stored and handled as prescribed by the controlling DoD Component. (NOTE: The required QD are only based on the energetic liquids' energetic reaction (blast overpressure and container fragmentation). These QD requirements do not consider the toxicity or potential down-wind hazard. Therefore, QD may not be the only factor that needs to be considered when selecting a location for storage and operations of energetic liquids.)

C9.5.1.2. This section does not govern the storage or handling of energetic liquids for uses other than in space launch vehicles, rockets, missiles, associated static test apparatus, and AE.

C9.5.2. Concept

C9.5.2.1. These QD Standards were developed on the premise that the controlling DoD Component shall ensure that the materials of construction are compatible with the energetic liquids, facilities are of appropriate design, fire protection and drainage control techniques are employed, and other specialized controls (e.g., nitrogen padding, blanketing, and tank cooling) are used, when required.

C9.5.2.2. When additional hazards associated with AE are involved, the safety distances prescribed in other sections of this Standard shall be applied, as required.

C9.5.2.3. These Standards are based upon the estimated credible damage resulting from an incident, without considering probabilities or frequency of occurrence.

C9.5.3. Determination of energetic liquids quantity

C9.5.3.1. The total quantity of energetic liquids in a tank, drum, cylinder, or other container shall be the net weight of the energetic liquids contained therein. Quantity of energetic liquids in the associated piping must be included to the points that positive means are provided for interrupting the flow through the pipe, or interrupting a reaction in the pipe in the event of an incident.

C9.5.3.2. When the quantities of energetic liquids are given in gallons [liters], the conversion factors given in Table C9.T17. may be used to determine the quantity in pounds [kg].

C9.5.4. Measurement of separation distances

C9.5.4.1. Measure from the closest controlling hazard source (e.g., containers, buildings, segment, or positive cutoff point in piping).

C9.5.4.2. Measure from the nearest container or controlling subdivision, when buildings containing a small number of cylinders or drums are present or when quantities of energetic liquids are subdivided effectively.

Table C9.T16. Hazard Classifications and Minimum QD For Energetic Liquids

Energetic Liquid	OSHA/NFPA Fuel[1] or Oxidizer[2] Class	DoD Storage Hazard Class	Minimum QD[3]
Hydrogen Peroxide, > 60%	3 or 4[4]	5.1 (LA)	800[5] ft or Table C9.T20. *243.8[5] m or Table C9.T20.*
IRFNA (Inhibited Red Fuming Nitric Acid)	3	8 (LA)	Table C9.T20.
Nitrogen Tetroxide/MON (Mixed oxides of nitrogen)	2	2.3 (LA)	Table C9.T20.
Liquid Oxygen	N/A	2.2 (LA)	Table C9.T21.
RP-1	II	3 (LB)	Table C9.T19.
JP-10	II	3J (LB)	Table C9.T19.
Liquid Hydrogen	N/A	2.1 (LB)	Table C9.T22.
Hydrazine, > 64%	II	8 (LC)	800[5] or 300[6] ft or Note 7 *243.8[5] m or 91.4[6] m or Note 7*
Aerozine 50 (50%N_2H_4/50% UDMH) (Unsymmetric dimethylhydrazine)	I B	6.1 (LC)	800[5] or 300[6] ft or Note 7 *243.8[5] m or 91.4[6] m or Note 7*
Methylhydrazine	I B	6.1 (LC)	800[5] or 300[6] ft or Note 7 *243.8[5] m or 91.4[6] m or Note 7*
UDMH	I B	6.1 (LC)	Table C9.T19.
Ethylene Oxide	I A	2.3 (LD)	H/D 1.1 QD[8] with TNT Equiv = 100%, or 800[5] or 300[6] ft *H/D 1.1 QD[8] with TNT Equiv = 100%, or 243.8[5] or 91.4[6] m*
Propylene Oxide	I A	3 (LD)	H/D 1.1 QD[8] with TNT Equiv = 100%, or 800[5] or 300[6] ft *H/D 1.1 QD[8] with TNT Equiv = 100%, or 243.8[5] or 91.4[6] m*
Nitromethane	I C	3 (LE)	Use H/D 1.1 QD with TNT Equiv. = 100%[9] or Table C9.T19.
Hydroxylammonium Nitrate (HAN)	2	8 (LE)	800[5] ft or Table C9.T20. *243.8[5] m or Table C9.T20.*
XM-46 (HAN Monopropellant)	N/A	1.3C (LE)	800[5] ft or use HD 1.3 QD *243.8[5] m or use HD 1.3 QD*
Otto Fuel II	III B	9 (LE)	Use H/D 1.1 QD[10] with TNT Equiv. = 100%, or 150[11] ft or Table C9.T19. *Use H/D 1.1 QD[10] with TNT Equiv. = 100%, or 45.7[11] m or Table C9.T19.*
Halogen Fluorides (ClF_3/ClF_5)	4	2.3 (LE)	Table C9.T20.
Liquid Fluorine	4	2.3 (LE)	Table C9.T20.
Nitrogen Trifluoride	4	2.2 (LE)	Table C9.T20.
Nitrate esters (e.g. NG, TMETN, DEGDN, TEGDN, BTTN)[12]	N/A	1.1 D (LE)	Use H/D 1.1 QD with TNT Equiv. = 100%

Notes for Table C9.T16.:

1. Flammable or combustible liquid classification index based on flash point and boiling point versus criteria as specified in 29 CFR 1910.106 Occupational Safety and Health Standards (Reference (r)) and NFPA 30 Flammable and Combustible Liquids Code (Reference (s)). Primary descriptor is a Roman numeral, possibly with an additional letter.
2. NFPA oxidizer classification index as described in NFPA 430 Code for the Storage of Liquid and Solid Oxidizers (Reference (t)). Descriptor is an ordinary number.
3. Positive measures for spill containment/control shall be taken for isolated storage of energetic liquids IAW applicable Occupational Safety and Health Administration (OSHA) and NFPA guidance (referenced in Tables C9.T19. through C9.T21.). For flammable energetic liquids and liquid oxidizers where only minimum blast or

fragment distances are specified, applicable OSHA and/or NFPA guidance referenced in Tables C9.T19. and C9.T20., respectively, should also be used.

4. Hydrogen peroxide solutions of concentration greater than 91 percent are NFPA Class 4 oxidizers.
5. Should be used as a default value, unless otherwise hazard classified, when the material is packaged in small (non-bulk) shipping containers, portable ground support equipment, small aerospace flight vehicle propellant tanks, or similar pressure vessels that provide heavy confinement (burst pressure greater than 100 psi [690 kPa]).
6. Should be used as a default value, unless otherwise hazard classified, when the material is packaged in small (non-bulk) shipping containers (DoT 5C or equivalent), portable ground support equipment, small aerospace flight vehicle propellant tanks, or similar pressure vessels providing a lower level of confinement (burst pressure less than or equal to 100 psi [690 kPa]) and if adequate protection from fragments is not provided from terrain, effective barricades, nets, or other physical means (lightweight building construction is not adequate). If protection from fragments is provided, use the IBD/PTRD "Protected" column of Table C9.T22.
7. For large ready, bulk, or rest storage tanks (as defined in subparagraphs C9.5.5.7., C9.5.5.9., and C9.5.5.10.), use Table C9.T22.
8. Where there is a reasonable risk of vapor cloud explosion of large quantities (for example, in bulk tank storage).
9. Technical grade nitromethane in unit quantities of 55 gallons [208.2 liters] or less in DoT-approved containers listed in 49 CFR 173.202 (Reference (e)) may be stored as flammable liquids (Table C9.T19.) provided the following apply:
    a. Packages are stored only one tier high.
    b. Packages are protected from direct rays of the sun.
    c. Maximum storage life of 2 years, unless storage life tests indicate product continues to meet purchase specification. Such tests are to be repeated at 1-year intervals thereafter.
10. For underwater static test stands, when operated at hydrostatic pressure above 50 psig [345 kPa], or for propellant tanks or other vessels having burst pressures of greater than 100 psig [690 kPa] without acceptable pressure relief devices (unless otherwise hazard classified). For underwater test stands, the TNT equivalence (i.e., MCE) should include the total energetic liquids weight in all pumps and plumbing, as well as the weight of energetic liquids held in tankage (under the test cell hydrostatic pressure) unless acceptable mitigation measures such as fuel line detonation arrestors and/or fuel tank isolation/barricading are used (as determined by hazard analysis).
11. Should be used as a default value, unless otherwise hazard classified, when the material is packaged in small vehicle propellant tanks, small (non-bulk) shipping containers, portable ground support equipment, or similar pressure vessels that provide relatively heavy confinement (burst pressure between 50 – 100 psig [345 – 690 kPa]) without acceptable pressure relief devices.
12. NG is Nitroglycerin, TMETN is Trimethylolethane Trinitrate, DEGDN is Diethyleneglycoldinatrate, TEGDN is Triethylene Glycol Dinitrate, and BTTN is Butane-Trio-Trinitrate.

Table C9.T17. Factors to Use When Converting Energetic Liquid Densities[1]

Item	**Density (lb/gal)** *[kg/l]*	**Temperature (°F)** *[°C]*
Chlorine Pentafluoride	14.8	77
	1.77	*25.0*
Chlorine trifluoride	15.1	77
	1.81	*25.0*
Ethyl alcohol	6.6	68
	0.79	*20.0*
Ethylene oxide	7.4	51
	0.89	*10.6*
Fluorine (liquid)	12.6	-306
	1.51	*-187.8*
HAN Monopropellants	11.9	77
	1.43	*25.0*
HAN solution (25 to 95 wt %)	10.0 to 13.4	68
	1.20 to 1.61	*20.0*
Hydrazine	8.4	68
	1.01	*20.0*
Hydrogen peroxide (90 percent)	11.6	77
	1.39	*25.0*
JP-10	7.8	60
	0.93	*15.6*
Liquid hydrogen	0.59	-423
	0.07	*-252.8*
Liquid oxygen	9.5	-297
	1.14	*-182.8*
Monomethyl hydrazine	7.3	68
	0.87	*20.0*
Nitrogen tetroxide	12.1	68
	1.45	*20.0*
Nitrogen trifluoride	12.8	-200
	1.53	*-128.9*
Nitromethane	9.5	68
	1.14	*20.0*
Otto Fuel II	10.3	77
	1.23	*25.0*
Propylene oxide	7.2	32
	0.86	*0.0*
Red fuming nitric acid (IRFNA)	12.9	77
	1.55	*25.0*
RP-1	6.8	68
	0.81	*20.0*
UDMH	6.6	68
	0.79	*20.0*
UDMH/hydrazine	7.5	77
	0.90	*25.0*

Note for Table C9.T17.:

1. Conversion of quantities of energetic liquids:
   From gallons to lbs [liter to kg]:
   lbs of energetic liquids = gallons X density of energetic liquids (lbs/gallon). [English EQN C9.T17-1]
   kg of energetic liquids = liters X density of energetic liquids (kg/liter) [Metric EQN C9.T17-2]
   From lb/gallon to kg/liter: 1 lb/gallon = 8.345 kg/liter [English EQN C9.T17-3]
   From kg/liter to lb/gallon: 1 kg/liter = 0.11983*lb/gallon [English EQN C9.T17-4]

C9.5.5. Hazard Classification of Energetic Liquids

C9.5.5.1. The main UN hazard classification designators for energetic liquids are indicated below. (The original liquid propellant Hazard Groups I - IV and CG A - F are no longer used.)

C9.5.5.1.1. Class 1: Explosives.

C9.5.5.1.2. Class 2: Compressed or liquefied gases.

C9.5.5.1.3. Class 3: Flammable liquids.

C9.5.5.1.4. Class 4: Flammable solids and self-reactive materials.

C9.5.5.1.5. Class 5: Oxidizers.

C9.5.5.1.6. Class 6: Toxic/infectious substances.

C9.5.5.1.7. Class 8: Corrosive.

C9.5.5.1.8. Class 9: Miscellaneous.

C9.5.5.2. Because two energetic liquids might each be compatible with certain explosive AE stores, but incompatible with each other, a two-part compatibility group designation is assigned to an energetic liquid. (The design and logistics of modern weapons sometimes require that consideration be given to permitting storage or operations involving energetic liquids in a storage structure containing solid explosives. For example, it may be necessary to store hydrocarbon-fueled cruise missiles having high explosive warheads with fueled configurations not containing explosive warheads. Another example is the storage of liquid gun propellant with explosive AE components.)

C9.5.5.2.1. The first element is the standard storage and transportation CG designation. The alpha designations are the same as the CG designations for UN Class 1 as given in Chapter 3. However, for storage and handling on DoD facilities, a CG may also be assigned to an energetic liquid in a Class other than Class 1. The absence of a CG indicates incompatibility with solid explosives.

C9.5.5.2.2. The second element is a new Energetic Liquid Compatibility Group (ELCG) designation. The ELCG applies to mixed storage of energetic liquids or AE containing

energetic liquids. The ELCG is specified in parentheses as the last element of the hazard classification. The ELCG designations and definitions are:

C9.5.5.2.2.1. LA: Energetic liquids that are strong oxidizers, mainly of acidic character. These materials may cause or contribute to the combustion of other material, possibly resulting in serious flare fires or explosions. Includes, but is not limited to, nitrogen tetroxide and Mixed Oxides of Nitrogen (MON), Inhibited Red Fuming Nitric Acid (IRFNA), liquid oxygen (LO_2), hydrogen peroxide (H_2O_2), and gels, slurries, or emulsions of these chemicals.

C9.5.5.2.2.2. LB: Energetic liquids that are readily combustible when exposed to, or ignited in the presence of an oxidizing agent, but that are not strong reducing agents. Some may be hypergolic with group LA materials. Includes, but is not limited to, hydrocarbons such as kerosenes and strained ring ramjet fuels; liquid hydrogen (LH_2); and gels, slurries, or emulsions of these chemicals.

C9.5.5.2.2.3. LC: Energetic liquids that are readily combustible when exposed to, or ignited in the presence of an oxidizing agent, and are also strong reducing agents. These will likely be hypergolic with group LA substances. Includes, but is not limited to, hydrazines and other amines; and gels, slurries, or emulsions of these chemicals.

C9.5.5.2.2.4. LD: Energetic liquids that act mainly as combustible fuels, similar to groups LB and LC, when exposed to or ignited in the presence of oxidizing agents but that may act as oxidizers in some combinations. They may be a monopropellant with the right catalyst, or may be pyrophoric and ignite upon release to the atmosphere. Examples are boranes and ethylene and propylene oxides.

C9.5.5.2.2.5. LE: Energetic liquids having characteristics that do not permit storage with any other energetic liquid. They may react adversely with either fuels (reducing agents) or oxidizers. Examples are nitromethane, nitrate ester-based formulations such as Otto Fuel II, liquid monopropellants containing Hydroxyl Ammonium Nitrate (HAN); halogen fluorides (ClF_3 and ClF_5) and fluorine; and gels, slurries, or emulsions of these chemicals.

C9.5.5.2.3. For mixing of energetic liquids:

C9.5.5.2.3.1. Different energetic liquids in the same ELCG may be stored together.

C9.5.5.2.3.2. ELCG-LE may not be mixed with other ELCG or dissimilar ELCG-LE.

C9.5.5.2.3.3. Mixed storage is prohibited between energetic liquids of different ELCG designations with one exception.

C9.5.5.2.3.3.1. ELCG-LB and -LC should not be stored together, particularly when the majority of the material stored is ELCG-LB; however, mixed storage of ELCG-LB and -LC is permitted when operationally necessary.

C9.5.5.2.4. As an example, for the 1.3C(LE) hazard classification for HAN-based liquid gun propellant XM-46:

C9.5.5.2.4.1. "C": indicates the propellant can be stored in the same magazine with CG-C solid propellants. Because CG-C and CG-D can be mixed, CG-D high explosive projectiles could also be stored with the energetic liquid gun propellant.

C9.5.5.2.4.2. "LE": indicates that hydrocarbon fuels (e.g., Jet Propellant (JP)-10), which is an ELCG-LB, would not be permitted in this storage scenario, because its ELCG-LB indicates incompatibility with ELCG-LE.

C9.5.5.3. Complete DoD hazard classification assignments for current energetic liquids are shown in Table C9.T16. (Conversions for gallons of energetic liquids to pounds is provided in Table C9.T17.)

C9.5.5.4. Each new energetic liquid, or new non-bulk packaging configuration of an energetic liquid, developed by a DoD Component or adopted for DoD use, must be examined and assigned a hazard classification per Reference (d).

C9.5.5.5. A different minimum distance may be assigned during the hazard classification process when the hazards of a particular new packaging configuration are not adequately addressed. This distance shall be indicated parenthetically, in hundreds of feet, as the first element of the hazard classification. For example, if a new liquid oxidizer pressure vessel configuration is hazard classified as (04)2.2(LA), then a minimum distance of 400 ft [122 m] would apply for IBD and PTRD, otherwise the prescribed liquid oxidizer QD criteria would apply.

C9.5.5.6. The predominant hazard of the individual energetic liquids can vary depending upon the location of the energetic liquid storage and the operations involved. These locations are listed below in the order of decreasing hazards.

C9.5.5.6.1. Launch pads. Operations at these facilities are very hazardous because of the proximity of fuel and oxidizer to each other, the frequency of launchings, lack of restraint of the vehicle after liftoff, and the possibility of fallback with resultant dynamic mixing on impact. To compute the equivalent explosive weight for the launch pad, use Table C9.T18. with the combined energetic liquids weight in the launch vehicle tanks and any energetic liquids in piping that are subject to mixing, except as indicated in subparagraph C9.5.5.8.

C9.5.5.6.2. Static test stands. Operations at these facilities are less hazardous because test items are restrained and subject to better control than launch vehicles. As with launch pads, the proximity of fuel and oxidizer presents a significant hazard. To reduce this hazard, tankage should be separated and remotely located from the static test stand. The equivalent explosive weights of Table C9.T18. shall be used, with the combined energetic liquids weight subject to mixing as determined by hazard analysis. The amount of energetic liquids held

in run tanks can be excluded from consideration if the test stand meets all the following criteria, if applicable:

C9.5.5.6.2.1. All tanks are American Society of Mechanical Engineers (ASME) certified and maintained per ASME Code, section VIII, Division 1 or Division 2 (Reference (u)).

C9.5.5.6.2.2. For cryogenic propellants, all tanks are constructed with double wall jacketing.

C9.5.5.6.2.3. Run tankage is protected from fragments produced by an engine malfunction.

C9.5.5.6.2.4. Both the fuel and oxidizer lines contain two (redundant), remotely-operated valves to shut off flow in the event of a malfunction.

Table C9.T18. Energetic Liquid Equivalent Explosive Weights [1, 2, 3, 4, 5]

ENERGETIC LIQUIDS	TNT EQUIVALENCE	
	STATIC TEST STANDS	RANGE LAUNCH
LO_2/LH_2	See Note 6	See Note 6
LO_2/LH_2 + LO_2/RP-1	Sum of (see Note 6 for LO_2/LH_2) + (10% for LO2/RP-1)	Sum of (see Note 6 for LO_2/LH_2) + (20% for LO2/RP-1)
LO_2/RP-1	10%	20% up to 500,000 lbs plus 10% over 500,000 lbs *20% up to 226,795 kg plus 10% over 226,795 kg*
IRFNA/UDMH [7]	10%	10%
N_2O_4/UDMH + N_2H_4 [7]	5%	10%
N_2O_4 liquid oxidizer + PBAN solid fuel (Hybrid propellants)	15% [8]	15% [8]
Nitromethane (alone or in combination)	100%	100%
Otto Fuel II	100% [9]	
Ethylene Oxide	100% [10]	100% [10]

Notes for Table C9.T18.:

1. The percentage factors given in the table are to be used to determine equivalent explosive weights of energetic liquids mixtures at static test stands and range launch pads when such energetic liquids are located aboveground and are unconfined except for their tankage. Other configurations shall be considered on an individual basis to determine equivalent explosive weights.
2. The equivalent explosive weight calculated by the use of this table shall be added to any non-nuclear explosive weight aboard before distances can be determined from Tables C9.T1. and C9.T5.
3. These equivalent explosive weights apply also for these substitutions:
   Alcohols or other hydrocarbons for RP-1.
   H_2O_2 for LO_2 (only when LO_2 is in combination with RP-1 or equivalent hydrocarbon fuel).
   Monomethylhydrazine (MMH) for N_2H_4, Unsymmetrical Dimethylhydrazine (UDMH), or combinations of the two.
4. For quantities of energetic liquids up to but not over the equivalent explosive weight of 100 lbs [45.4 kg] of AE, the distance shall be determined on an individual basis by the DoD Component. All personnel and facilities, whether involved in the operation or not, shall be protected by operating procedures, equipment design, shielding, barricading, or other suitable means.
5. Distances less than intraline are not specified. Where a number of prepackaged energetic liquid units are stored together, separation distance to other storage facilities shall be determined on an individual basis by the DoD Component, taking into consideration normal hazard classification procedures.
6. For siting launch vehicles and static test stands, equivalent explosive weight is the larger of:
   a. The weight equal to $8W^{2/3}$ [$4.13\ Q^{2/3}$] where W is the weight of LO_2/LH_2; or
   b. 14 percent of the LO_2/LH_2 weight.
   NOTE: For these calculations, use the total weight of LO_2/LH_2 present in the launch vehicle, or the total weight in test stand run tankage and piping for which there is no positive means to prevent mixing in credible accidents. When it can be reliably demonstrated that the MCE involves a lesser quantity of energetic liquids subject to involvement in a single reaction, the lesser quantity may be used in determining the equivalent explosive weight. When siting is based on a quantity less than the total energetic liquids present, the MCE and associated explosive yield analysis must be documented in an approved site plan (section C5.4.).
7. These are hypergolic combinations.

8. The equivalent explosive weight of the hybrid rocket system N_2O_4 liquid oxidizer combined with PBAN solid fuel was evaluated as 15 percent for an explosive donor accident scenario, 5 percent for a high-velocity impact scenario, and less than 0.01 percent (negligible) for static mixing (tower drop) failures (Air Force Rocket Propulsion Laboratory AFRPL-TR-67-124 (Reference (v))).
9. See Note 10 of Table C9.T16.
10. See Note 8 of Table C9.T16.

C9.5.5.7. Ready storage is relatively close to the launch and static test stands; normally it is not involved directly in feeding the engine as in the case with run tankage, which is an integral part of all launch and test stand operations. The equivalent explosive weights of Table C9.T18. shall be used with the combined energetic liquids weight subject to mixing if the facility design does not guarantee against fuel and oxidizer mixing and against detonation propagation to, or initiation at, the ready storage facility when an accident occurs at the test stand, on the ground at the launch pad, or at the ready storage areas. Otherwise, fire and fragment hazards shall govern (Tables C9.T16., C9.T19., C9.T20., C9.T21., and C9.T22.).

C9.5.5.8. Fire and fragment hazards govern (Tables C9.T16., C9.T19., C9.T20., C9.T21., and C9.T22.) if the design is such that the system is closed except for approved venting; is completely airtight; fuel and oxidizer never are employed concurrently; and each has a completely separate isolated system and fitting types to preclude intermixing, and the energetic liquids are of required purity. Otherwise, equivalent explosive weights (Table C9.T18.) shall be used with the combined energetic liquids weight.

C9.5.5.9. Bulk storage is the most remote storage with respect to launch and test operations. It consists of the area, tanks, and other containers therein, used to hold energetic liquids for supplying ready storage and, indirectly, run tankage where no ready storage is available. Fire and fragment hazards govern (Tables C9.T16., C9.T19., C9.T20., C9.T21., and C9.T22.) except in special cases as indicated in Tables C9.T16. and C9.T18.

C9.5.5.10. Rest storage is temporary-type storage and most closely resembles bulk storage. It is a temporary parking location for barges, trailers, tank cars, and portable hold tanks used for topping operations when these units actually are not engaged in the operation, and for such vehicles when they are unable to empty their cargo promptly into the intended storage container. Fire and fragment hazards govern (Tables C9.T16., C9.T19., C9.T20., C9.T21., and C9.T22.) except in special cases as indicated in Tables C9.T16. and C9.T18. The transporter becomes a part of that storage to which it is connected during energetic liquids transfer.

Table C9.T19. QD Criteria for OSHA/NFPA Class I – III Flammable and Combustible Energetic Liquids Storage in Detached Buildings or Tanks[1, 2]

Quantity	**IBD/PTRD (ft)** *[m]*	**ILD/Aboveground IMD (ft) (ft)** *[m]*
Unlimited [3]	50 [4,5] *15.2* [4,5]	Note 6

Notes for Table C9.T19.:

1. Other guidelines for diking, tank or container construction, tank venting, and facility construction apply (except for Class III B combustible liquids, e.g. Otto Fuel II). Refer to Reference (r) and Reference (s) for further guidance on liquid storage and fire protection.
2. Refer to Reference (r) and Reference (s) for definition and explanation of OSHA/NFPA classification of flammable and combustible liquids.
3. Guidelines on interior storage configuration (for container storage inside buildings) also apply with these exceptions:
   a. If the storage building is located at least 100 ft [30.5 m] from any exposed building (under the direct jurisdiction of a fire protection organization) or property line; or
   b. If the storage building is located at least 200 ft [61 m] from any exposed building (not under the direct jurisdiction of a fire protection organization) or property line; or
   c. For combustible liquids that will not exhibit sustained burning in bulk form, e.g. Otto Fuel II, as determined through American Society for Testing and Materials (ASTM) D 92 Standard Test Method for Flash and Fire Points by Cleveland Open Cup or comparable testing. Refer to Reference (r) and Reference (s) for further guidance on liquid storage and fire protection.
4. For container storage inside of a building, IBD/PTR distances may be less than 50 ft [15.2 m] (to a minimum of 10 ft [3.05 m]) if the storage building is constructed of fire-resistive exterior walls having an NFPA fire resistance rating of 2 hours or more, according to NFPA 251 Standard Methods of Tests of Endurance of Building Construction Materials (Reference (w)).
5. For large tank storage, QD may be 25 ft [7.6 m] for tank capacities up to 100,000 gallons [378,541 liters], and 37.5 ft [11.4 m] for capacities between 100,001 gallons [378,545 liters] and 500,000 gallons [1,892,706 liters].
6. For flammable liquids container storage inside of a building, ILD/aboveground IMD is 50 ft [15.2 m] (except as in Note 4), or for adjacent incompatible oxidizer storage, distances specified for energetic liquid oxidizers (Table C9.T20.) or oxygen (Table C9.T21.). For flammable liquids storage in fixed or large portable tanks, ILD/aboveground IMD is either (1) for compatible energetic liquids, equal to one-sixth of the sum of the diameters of the two adjacent tanks, or distances specified in Note 5 for adjacent container storage inside of a building; or (2) for adjacent incompatible oxidizer storage, distances specified for energetic liquid oxidizers (Table C9.T20.) or oxygen (C9.T21.). ECM may be used to their physical capacity for storing flammable energetic liquids provided they comply with the construction and siting requirements of Chapters 5 and 9, respectively for HD 1.1. ECM must be sited for a minimum of 100 lbs [45.4 kg] of HD 1.1 items using Tables C9.T4. and C9.T6.

Table C9.T20. QD Criteria for Energetic Liquid Oxidizer (Excluding Liquid Oxygen) Storage in Detached Buildings or Tanks[1, 2]

NFPA Oxidizer Class[3]	**Quantity (lbs)** *[kg]*	**IBD/PTRD/ILD/Aboveground IMD (ft)** *[m]*
2	up to 600,000	50
	up to 227,154	*15.2*
3	up to 400,000	75
	up to 181,436	*22.9*
4[4,5]	≤ 50	75
	≤ 22.7	*15.2*
	70	76
	31.8	*23.1*
	100	79
	45.4	*24.1*
	150	84
	68.0	*25.7*
	200	89
	90.7	*27.2*
	300	98
	136.1	*29.9*
	500	114
	226.8	*34.8*
	700	128
	317.5	*39.0*
	1,000	147
	453.6	*44.7*
	1,500	175
	680.4	*53.2*
	2,000 [6]	200
	907.2 [6]	*60.9*
	3,000	246
	1360.8	*74.9*
	5,000	328
	2268.0	*100.0*
	7,000	404
	3175.1	*123.0*

Table C9.T20. QD Criteria for Energetic Liquid Oxidizer (Excluding Liquid Oxygen) Storage in Detached Buildings or Tanks[1, 2] (continued)

NFPA Oxidizer Class[3]	**Quantity (lbs)** *[kg]*	**IBD/PTRD/ILD/Aboveground IMD (ft)** *[m]*
	10,000	510
	4535.9	*155.4*
	15,000	592
	6,803.9	*180.4*
	20,000	651
	9,071.8	*198.5*
	30,000	746
	13,607.7	*227.3*
	50,000	884
	22,679.5	*269.5*
	70,000	989
	31,751.3	*301.5*
	100,000	1114
	45,359.0	*339.5*
	150,000	1275
	68,038.5	*388.6*
	200,000	1404
	90,718.0	*427.8*
	300,000	1607
	136,077.0	*489.7*
	500,000	1905
	226,795.0	*580.6*

Notes for Table C9.T20.:

1. QD requirements do not apply to storage of NFPA Class 2 and 3 oxidizers (Reference (t)) in approved fixed tanks.
2. Other requirements for interior storage configuration, building construction, diking, container materials, facility venting, etc. also apply. Refer to Reference (t) for further guidance on oxidizer storage and fire protection.
3. Refer to Reference (t) for definition and explanation of NFPA classification of oxidizers.
4. Multiple tanks containing NFPA Class 4 oxidizers may be located at distances less than those specified in the table; however, if the tanks are not separated from each other by 10 percent of the distance specified for the largest tank, then the total contents of all tanks shall be used to calculate distances to other exposures.

5. The equations given below may be used to determine distance/weights for other quantities:
   Quantity (W) in lbs, distance in ft
   W ≤ 10,000 lbs
   $$\text{Distance} = 149.3*W^{(-0.41+0.059*\ln(W))}$$ [English EQN C9.T20-1]
   W > 10,000 lbs
   $$\text{Distance} = 24*W^{1/3}$$ [English EQN C9.T20-2]
   Quantity (W) in kg, distance in m
   W ≤ 4,535.9 kg
   $$\text{Distance} = 34.2*W^{(-0.317+0.059*\ln(W))}$$ [Metric EQN C9.T20-3]
   W > 4,535.9 kg
   $$\text{Distance} = 9.52*W^{1/3}$$ [Metric EQN C9.T20-4]
   Quantity (W) in lbs, distance in ft
   Distance > 75 ft
   $$W = \exp[-313.18 + 206.53*(\ln(\text{Distance})) - 49.968*(\ln(\text{Distance}))^2 + 5.5354*(\ln(\text{Distance}))^3 - 0.2119*(\ln(\text{Distance}))^4]$$ [English EQN C9.T20-5]
   Quantity (W) in kg, distance in m
   Distance > 22.9 m
   $$W = \exp[-130.32 + 108.79*(\ln(\text{Distance})) - 32.587*(\ln(\text{Distance}))^2 + 4.3313*(\ln(\text{Distance}))^3 - 0.21111*(\ln(\text{Distance}))^4]$$ [Metric EQN C9.T20-6]
6. NFPA 430 requires sprinkler protection to be provided for storage of greater than 2,000 lbs [907.2 kg] of NFPA Class 4 oxidizers inside of a building (Reference (t)).

Table C9.T21. QD Criteria for Liquid Oxygen Storage in Detached Buildings or Tanks[1, 2]

Quantity	**IBD/PTRD (ft)** *[m]*	**ILD/Aboveground IMD (ft)** *[m]*
Unlimited[3]	100 *30.5*	100 [4] *30.5* [4]

Notes for Table C9.T21.:

1. Per Reference (w), distances do not apply where a protective structure having an NFPA fire resistance rating of at least 2 hours interrupts the line of sight between the oxygen system and the exposure. Refer to Reference (r) and NFPA 50 Standard for Bulk Oxygen Systems at Consumer Sites (Reference (x)) for further guidance.
2. Additional guidelines relating to equipment assembly and installation, facility design (diking), and other fire protection issues also apply. Refer to Reference (r) and Reference (x) for further guidance.
3. QD is independent of oxygen quantity.
4. Minimum ILD/IMD distance between adjacent compatible energetic liquids storage is 50 ft [15.2 m].

Table C9.T22. QD Criteria for Liquid Hydrogen and Bulk Quantities of Hydrazines[1]

Propellant Weight (W) (lbs) ***[kg]***	**IBD/PTRD**		**ILD/Aboveground IMD[6,7] (ft)** ***[m]***
	Unprotected[2,3] (ft) ***[m]***	**Protected[4,5] (ft)** ***[m]***	
≤100	600	80	30
≤ 45.4	*182.9*	*24.4*	*9.1*
150	600	90	34
68.0	*182.9*	*27.4*	*10.3*
200	600	100	37
90.7	*182.9*	*30.4*	*11.2*
300	600	113	42
136.1	*182.9*	*34.4*	*12.7*
500	600	130	49
226.8	*182.9*	*39.5*	*14.6*
700	600	141	53
317.5	*182.9*	*42.9*	*15.9*
1,000	600	153	57
453.6	*182.9*	*46.5*	*17.2*
1,500	600	166	62
680.4	*182.9*	*50.7*	*19.0*
2,000	600	176	66
907.2	*182.9*	*53.7*	*19.9*
3,000	600	191	72
1360.8	*182.9*	*58.2*	*21.5*
5,000	600	211	79
2268.0	*182.9*	*64.1*	*23.7*
7,000	600	224	84
3175.1	*182.9*	*68.3*	*25.3*
10,000	603	239	90
4,535.9	*183.9*	*72.9*	*27.0*
15,000	691	258	97
6,803.9	*210.5*	*78.5*	*29.0*
20,000	760	272	102
9,071.8	*231.7*	*82.7*	*30.6*
30,000	870	292	110
13,607.7	*265.2*	*89.0*	*32.9*
50,000	1,032	321	120
22,679.5	*314.5*	*97.6*	*36.1*
70,000	1,154	341	128
31,751.3	*351.8*	*103.8*	*38.4*
100,000	1,300	364	136
45,359.0	*396.2*	*110.7*	*41.0*

Table C9.T22. QD Criteria for Liquid Hydrogen and Bulk Quantities of Hydrazines[1] (continued)

Propellant Weight (W) (lbs)	**IBD/PTRD**		**ILD/Aboveground IMD[6,7] (ft)**
	Unprotected[2,3] (ft)	**Protected[4,5] (ft)**	
[kg]	***[m]***	***[m]***	***[m]***
150,000	1,488	391	147
68,038.5	*453.6*	*119.1*	*44.1*
200,000	1,637	412	155
90,718.0	*499.2*	*125.5*	*46.4*
300,000	1,800	444	166
136,077.0	*548.6*	*135.1*	*50.0*
500,000	1,800	487	183
226,795.0	*548.6*	*148.2*	*54.8*
700,000	1,800	518	194
317,513.0	*548.6*	*157.6*	*58.3*
1,000,000	1,800	552	207
453,590.0	*548.6*	*168.1*	*62.2*
1,500,000	1,800	594	223
680,385.0	*548.6*	*180.8*	*67.8*
2,000,000	1,800	626	235
907,180.0	*548.6*	*190.4*	*70.5*
3,000,000	1,800	673	252
1,360,770.0	*548.6*	*204.7*	*75.8*
5,000,000	1,800	737	276
2,267,950.0	*548.6*	*224.2*	*83.0*
7,000,000	1,800	782	293
3,175,130.0	*548.6*	*237.9*	*88.0*
10,000,000	1,800	832	312
4,535,900.0	*548.6*	*253.3*	*93.7*

Notes for Table C9.T22.:

1. Positive measures shall be taken to prevent mixing of hydrogen or hydrazines and adjacent oxidizers in the event of a leak or spill.
2. Distances are necessary to provide reasonable protection from fragments of tanks or equipment that are expected to be thrown in event of a vapor phase explosion.
3. W in lbs, Distance in ft

   W $\leq$ 10,000 lbs

   Unprotected Distance = 600 ft

   10,000 < W $\leq$ 265,000 lbs,

   Unprotected Distance = $28*W^{1/3}$ [English EQN C9-T22-1]

   W > 265,000 lbs

   Unprotected Distance = 1,800 ft

   W in kg, Distance in m

   W $\leq$ 4,535.9 kg

   Unprotected Distance = 182.9 m

   4,535.9 kg <W $\leq$ 120,201.4 kg

   Unprotected Distance = $11.11*W^{1/3}$ [Metric EQN C9.T22-2]

   W > 120,201.4 kg

   Unprotected Distance = 548.6 m

   W in lbs, Distance in ft

   603 ft $\leq$ Unprotected Distance < 1,798 ft

$W = (\text{Unprotected Distance}/28)^3$ [English EQN C9-T22-3]

W in kg, Distance in m

183.9 m $\leq$ Unprotected Distance < 548.2 m

$W = (\text{Unprotected Distance}/11.11)^3$ [Metric EQN C9.T22-4]

4. The term "protected" means that protection from fragments is provided by terrain, effective barricades, nets, or other physical means.
5. Distances are based on the recommended IBD given in U.S. Department of the Interior, Bureau of Mines Report 5707 (Reference (y)), and extrapolation of the 2 cal/cm^2 data on the 1 percent water vapor curve.

W in lbs, Distance in ft

W $\leq$ 100 lbs

Protected Distance = 80 ft

100 lbs <W

$\text{Protected Distance} = -154.1 + 72.89*[\ln(W)] - 6.675*[\ln(W)]^2 + 0.369*[\ln(W)]^3$. [English EQN C9-T22-5]

W in kg, Distance in m

W $\leq$ 45.4 kg

Protected Distance = 24.4 m

45.4 kg <W $\leq$

$\text{Protected Distance} = -30.62 + 19.211*[\ln(W)] - 1.7678*[\ln(W)]^2 + 0.1124*[\ln(W)]^3$ [Metric EQN C9.T22-6]

W in lbs, Distance in ft

80 ft $\leq$ Protected Distance

$W = \exp[311.367 - 215.761*(\ln(\text{protected distance})) + 55.1828*(\ln(\text{protected distance}))^2 - 6.1099*(\ln(\text{protected distance}))^3 + 0.25343*(\ln(\text{protected distance}))^4]$ [English EQN C9-T22-7]

W in kg, Distance in m

24.4 m $\leq$ Protected Distance

$W = \exp[122.38 - 108.8094*(\ln(\text{protected distance})) + 35.5517*(\ln(\text{protected distance}))^2 - 4.9055*(\ln(\text{protected distance}))^3 + 0.25343*(\ln(\text{protected distance}))^4]$ [Metric EQN C9.T22-8]

6. ILD/aboveground IMD distances in this column apply for adjacent compatible (ELCG LB or LC) storage; for adjacent incompatible (other ELCG) storage, use IBD distances shown in previous columns. ECM may be used to their physical capacity for storing hydrogen provided they comply with the construction and siting requirements of Chapters 5 and 9, respectively for HD 1.1. ECM must be sited for a minimum of 100 lbs [45.4 kg] of HD 1.1 items using Tables C9.T4. and C9.T6.
7. Distances are 37.5 percent of "protected" column.
8. Extrapolations above 1,000,000 lbs [453,590 kg] extend well outside data included in Reference (y) from which the original QD tables were derived; however, they are supported by independent calculations and knowledge of like phenomena.

C9.5.5.11. Run tankage (operating tankage) consists of the tank and other containers and associated piping used to hold the energetic liquids for direct feeding into the engine or device during operation. The contents of properly separated "run tanks" (operating tankage) and piping are normally considered on the basis of the pertinent hazards for the materials involved, except for quantities of incompatible materials that are or can be in a position to become mixed. Equivalent explosive weights shall be used (Table C9.T18.) for quantities of such materials subject to mixing unless provisions of subparagraphs C9.5.5.6.2.1. through C9.5.5.6.2.4. are satisfied.

C9.5.5.12. A 25-ft [7.6 m] clear zone to inhabited buildings shall be maintained, as a minimum, on each side of pipelines used for energetic liquids (excluding flammable or combustible liquids that exhibit normal fire hazards such as RP-1, JP-10, and Otto Fuel II). Tables C9.T16., C9.T20., C9.T21., and C9.T22. apply, as appropriate.

C9.5.6. QD standards. Since many energetic liquids are not classified as UN Class 1 explosives, conventional QD storage criteria do not generally apply to these materials. At the

same time, the (non-Class 1) UN transportation hazard classifications for many energetic liquids appear to be inappropriate and/or inadequate for application to storage safety (based on available accident and test data). For example, hydrazine has a UN hazard classification of 8 (corrosive), while it also is subject to dangerous fire and explosive behavior. Thus, the implementation of QD criteria for energetic liquids is based on an independent determination of the predominant hazard presented by the material in the storage environment. The following standards are applicable to energetic liquids used for propulsion or operation of missiles, rockets, and other related devices.

C9.5.6.1. Tables C9.T16., C9.T19., C9.T20., C9.T21., and C9.T22. provide minimum distance requirements for storage of bulk quantities, and in some cases, pressure vessels and other commercial packagings of energetic liquids. In general, the minimum distance required by the material requiring the greatest distance shall separate storage of different energetic liquids. In addition, positive measures shall be taken to control the flow of energetic liquids in the event of a leak or spill, in order to prevent possible fire propagation or accumulation of flammable liquids near other storage, and/or to prevent mixing of incompatible energetic liquids (except for specific hazardous locations as identified in subparagraph C9.5.5.6. above). Equivalent explosive weights apply for some materials as indicated in Tables C9.T16. and C9.T18. Fragment hazards govern for some materials in certain packaging configurations. For the more conventional fuels and oxidizers, and also where minimum blast and/or fragment criteria are not required due to low confinement packaging, QD standards are adopted from OSHA and NFPA guidelines to account for normal fire protection principles.

C9.5.6.2. For specific hazardous locations as defined in subparagraph C9.5.5.6. above, equivalent explosive weights may apply. If so, consult Tables C9.T16. and C9.T18. with the combined energetic liquids weight subject to mixing and use distances found in Table C9.T1. or C9.T5. Enter the equivalent explosive weight in Table C9.T1. or C9.T5. QD standards for other conditions and equivalent explosive weights for any combination not contained in Table C9.T16. or C9.T18. shall be determined by the controlling DoD Component.

C9.5.7. Contaminated energetic liquids

C9.5.7.1. Caution shall be exercised in the storage and handling of contaminated energetic liquids. Such contamination may increase the degree of hazard associated with the energetic liquids.

C9.5.7.2. Energetic liquids known to be contaminated or in a suspect condition shall be isolated and provided separate storage from all other energetic liquids pending laboratory analysis for verification of contamination and disposition requirements, if any.

C9.6. SITING

C9.6.1. Airfields and Heliports.

C9.6.1.1. Scope and Application.

C9.6.1.1.1. This section:

C9.6.1.1.1.1. Applies to AE that is under the control and custody of DoD personnel at airfields and heliports. (Chapter 10 applies when these requirements cannot be met for contingencies, combat operations, and military operations other than war.)

C9.6.1.1.1.2. Does not apply to AE installed on aircraft (e.g., egress system components, squibs, and detonators for jettisoning external stores, engine-starter cartridges, fire extinguisher cartridges, and destructors in electronic equipment), contained in survival and rescue kits (e.g., flares, signals, explosives components of emergency equipment), and other such items or materials necessary for safe flight operations.

C9.6.1.1.2. Aircraft parking areas.

C9.6.1.1.2.1. Uploading and downloading of AE shall be conducted at explosives-sited aircraft parking areas.

C9.6.1.1.2.2. QD is not required for the following:

C9.6.1.1.2.2.1. Aircraft loaded with AE shown below and parked in designated aircraft parking areas that meet airfield criteria when evaluated as a PES:

C9.6.1.1.2.2.1.1. HD 1.2.2: gun AE, 30 mm or less.

C9.6.1.1.2.2.1.2. HD 1.3: Captive missiles, aircraft defensive flares or chaff.

C9.6.1.1.2.2.1.3. HD 1.4 AE.

C9.6.1.1.2.2.2. Uploading and downloading AE listed above (subparagraph C9.6.1.1.2.2.1.), at a designated aircraft parking area, provided the quantity of AE involved in the operation is limited to a single aircraft load.

C9.6.1.2. Additional Siting Criteria. This section's QD criteria shall be applied with the airfield clearance criteria that is prescribed by DoD Component and FAA regulations (14 CFR Part 77 (Reference (z))). For airfields and heliports:

C9.6.1.2.1. Used exclusively by the DoD Components and allied nations' military components; combat aircraft parking areas, AE cargo areas, alert hangars, and shelters may be located within the airfield clearance zone, the exception is in AE prohibited areas (see subparagraph C9.6.1.7.).

C9.6.1.2.2. Not used exclusively by DoD Components and allied nations military components; combat aircraft parking areas, AE cargo areas, alert hangars, and shelters shall be located as prescribed in Tables C9.T23. and C9.T24. (Refer to Table C9.T24. first.)

C9.6.1.3. Measurement of Separation Distances. In applying Tables C9.T23. and C9.T24., distances shall be measured as follows:

C9.6.1.3.1. Loaded Aircraft to Loaded Aircraft. Measure the shortest distance between AE on one aircraft to AE on the adjacent aircraft.

C9.6.1.3.2. AE Location to Taxiways and Runways. Measure from the nearest point of the AE location to the:

C9.6.1.3.2.1. Nearest point of the taxiway.

C9.6.1.3.2.2. Centerline of the runway.

C9.6.1.4. Helicopter Landing Areas for AE Operations. Helicopter landing areas for loading and unloading AE within storage sites and quick reaction alert sites shall be considered AGM and may be sited at IMD based only upon the NEWQD carried by the helicopter. Such helicopter landing areas shall meet the following requirements:

C9.6.1.4.1. Flight clearance criteria are met.

C9.6.1.4.2. Landing and takeoff approaches shall not be over any AE facilities.

C9.6.1.4.3. Helicopter operations are to be limited to AE support of the facilities concerned.

C9.6.1.4.4. Carrying of passengers is not permitted.

C9.6.1.4.5. During helicopter takeoff, landing, or loading or unloading, AE operations shall not be conducted at any PES located within IBD of the helicopter landing area. During landing or takeoff, PES doors shall be closed.

C9.6.1.4.6. Safety precautions normal to other modes of transportation are to be observed.

Table C9.T23. HD 1.1 QD for Military Aircraft Parking Areas

NEWQD (lbs) *[kg]*	**Distance for Specific Targets Indicated in Table C9.T24[1,2,3]** (ft) *[m]*
50	111
22.7	33.7
70	124
31.8	37.7
100	139
45.4	42.4
150	159
68.0	48.6
200	175
90.7	53.5
300	201
136.1	61.2
500	238
226.8	72.6
700	266
317.5	81.2
1,000	300
453.6	91.4
1,500	343
680.4	104.7
2,000	378
907.2	115.2
3,000	433
1,360.8	131.9
5,000	513
2,268.0	156.4
7,000	574
3,175.1	174.9
10,000	646
4,535.9	197.0
15,000	740
6,803.9	225.5
20,000	814
9,071.8	248.2
30,000	932
13,608	284.1
50,000	1,105
22,680	336.9
70,000	1,236
31,751	376.9
100,000	1,392
45,359	424.4
150,000	1,594
68,039	485.8
200,000	1,754
90,718	534.7
300,000	2,008
136,077	612.1
500,000	2,381
226,795	725.8

Notes for Table C9.T23.:

1. D in ft, NEWQD in lbs
   $D = 30W^{1/3}$ [English EQN C9.T23-1]
   with a minimum distance of 111 ft
   D in m, NEWQD in kg
   $D = 11.9Q^{1/3}$ [Metric EQN C9.T23-2]
   with a minimum distance of 33.8 m
   D in ft, NEWQD in lbs
   $NEWQD = D^3/27{,}000$ [English EQN C9.T23-3]
   with a minimum NEWQD of 50 lbs
   D in m, NEWQD in kg
   NEWQD = D3/1,685.2 [Metric EQN C9.T23-4]
   with a minimum NEWQD of 22.7 kg
2. Minimum fragment distance requirements for HD 1.1 (see subparagraph C9.4.1.2.) do not apply to targets for which this table is used.
3. To protect against low-angle, high-speed fragments, barricades should be provided; however, these distances shall not be reduced.

Table C9.T24. Application of AE Separation Distances for Airfields and Heliports

(Note: Table entries refer to the key below and are not K factors)

To:	**From:**				
	Combat Aircraft Parking Area	**AE Cargo Area**	**AE Storage Facility**	**AE Operating Facility**	**Ready Ammunition Storage Facility**
Combat Aircraft Parking Area	3	3	5	5	3
AE Cargo Area	3	3	3	3	3
AE Storage Facility	3	3	3	3	3
AE Operating Facility	4	4	4	4	4
Ready Ammunition Storage Facility	3	3	3	3	3
Inhabited Building	1	1	1	1	1
Public Traffic Route & Taxiway (joint Dod-Non DoD use)	2	2	2	2	2
Runway (joint DoD-Non DoD use)	1	1	1	1	1
Runway/Taxiway (DoD Component use only)	None	None	11	2	None
Aircraft Parking Area	10	10	6	6	10
Aircraft Passenger Loading/Unloading Area	7	7	7	7	7
Recreation Area	8	9	9	9	8

Notes for Table C9.T24.:

1. Use applicable IBD.
2. Use applicable PTRD.
3. For HD 1.1, use applicable IMD. For HD 1.2, apply Note 10. Protects against simultaneous detonation of AE on adjacent aircraft, but does not prevent serious damage to aircraft and possible propagation of detonation due to fragments, debris, or fire.
4. Use applicable ILD.
5. Use Table C9.T23. distances for mass-detonating items and applicable PTRD for nonmass-detonating items.

6. Use Table C9.T23. distances for DoD Component aircraft parking areas and applicable IBD for non-DoD entity aircraft parking areas.
7. Use applicable PTRD for locations in the open where passengers enplane and deplane; use applicable IBD if a structure is included where passengers assemble, such as a passenger terminal building.
8. No distance required to recreational areas that are used exclusively for alert personnel manning the combat-loaded aircraft. Other recreational areas where people are in the open shall be at applicable PTRD. When structures, including bleacher stands, are a part of such area, applicable IBD shall be used.
9. Recreational areas, where people are in the open, shall be at applicable PTRD. When structures, including bleacher stands are part of such area, applicable IBD shall be used.
10. Within these areas of airfields and heliports exclusively used by the DoD Components, the separation of aircraft parking areas from combat aircraft parking areas and their ready AE storage facilities and AE cargo areas are considered to be a command function. At joint DoD/non-DoD use airfields and heliports, the combat aircraft parking areas and its ready AE storage facilities and AE cargo area shall be separated from non-DoD aircraft as specified in Note 6, above.
11. Use $18W^{1/3}$ [$7.14Q^{1/3}$] distances from side or rear of ECM to taxiways; use PTRD from front of ECM or any other storage locations to taxiways; and use PTRD from all storage location to runways.

C9.6.1.5. Hardened Aircraft Shelters (HAS).

C9.6.1.5.1. HAS and associated AE facilities shall be separated according to Table C9.T25. At these distances there will be a high degree of protection against propagation of explosion when HAS doors are properly secured. However, the exposed shelter may be damaged heavily and aircraft and AE therein may be rendered unserviceable.

C9.6.1.5.2. HAS and associated AE facilities separated according to Table C9.T26. will provide a higher degree of asset preservation than those provided in Table C9.T25. An explosion in one shelter or ready storage facility may destroy it and its contents, but aircraft within adjacent shelters will be undamaged provided the doors are closed. These aircraft may not be immediately accessible due to debris.

C9.6.1.5.3. The front, side, or rear sectors of a HAS as either a PES or an ES are defined in Figure C9.F9.

C9.6.1.5.4. For a third-generation HAS containing up to 11,000 lbs [4,989.5 kg] NEWQD, use separation distances of Table C9.T27. to unhardened ES. The QD criteria given in Table C9.T27. apply to all HD 1.1 AE, regardless of any minimum fragment distance denoted by (xx) 1.1.

C9.6.1.5.5. When operational necessity dictates, as determined by the DoD Component, separation distances less than those contained in Tables C9.T25. and C9.T26. may be approved; however, it must be shown that equivalent protection is being provided.

Table C9.T25. Minimum Hazard Factor for HAS for Propagation Prevention

	From ➔	1st Generation HAS			2nd & 3rd Generation HAS[3]			Ready Service ECM				Ready Service AGM	
To ⬇		**S**	**R**	**F**	**S**	**R**	**F**	**S**	**R**	**FB**	**FU**	**B**	**U**
1st Generation HAS[3]	**S**	2	2	2.75	2	2	2.75	1.25[1]	1.25[1]	2.75[2]	2.75[2]	2.75	2.75
		0.79	*0.79*	*1.09*	*0.79*	*0.79*	*1.09*	*0.50[1]*	*0.50[1]*	*1.09[2]*	*1.09[2]*	*1.09*	*1.09*
	R	2	2	2.75	2	2	2.75	1.25[1]	1.25[1]	2.75[2]	2.75[2]	2.75	2.75
		0.79	*0.79*	*1.09*	*0.79*	*0.79*	*1.09*	*0.50[1]*	*0.50[1]*	*1.09[2]*	*1.09[2]*	*1.09*	*1.09*
	F	6	4.5	8	6	4.5	9	1.25[1]	2.75[2]	6[2]	9[2]	6	9[2]
		2.38	*1.79*	*3.17*	*2.38*	*1.79*	*3.57*	*0.50[1]*	*1.09[2]*	*2.38[2]*	*3.57[2]*	*2.38*	*3.57[2]*
2nd & 3rd Generation HAS[3]	**S**	2	2	2.75	2	2	2.75	1.25[1]	1.25[1]	2.75[2]	2.75[2]	2.75	2.75
		0.79	*0.79*	*1.09*	*0.79*	*0.79*	*1.09*	*0.50[1]*	*0.50[1]*	*1.09[2]*	*1.09[2]*	*1.09*	*1.09*
	R	2	2	2.75	2	2	2.75	1.25[1]	1.25[1]	2.75[2]	2.75[2]	2.75	2.75
		0.79	*0.79*	*1.09*	*0.79*	*0.79*	*1.09*	*0.50[1]*	*0.50[1]*	*1.09[2]*	*1.09[2]*	*1.09*	*1.09*
	F	4.5	2.75	5	4.5	2.75	6	1.25[1]	1.25[1]	2.75[2]	2.75[2]	2.75	2.75
		1.79	*1.09*	*1.98*	*1.79*	*1.09*	*2.38*	*0.50[1]*	*0.50[1]*	*1.09[2]*	*1.09[2]*	*1.09*	*1.09*
Ready Service ECM	**S**	2	2	2.75	2	2	2.75						
		0.79	*0.79*	*1.09*	*0.79*	*0.79*	*1.09*						
	R	2	2	2.75	2	2	2.75						
		0.79	*0.79*	*1.09*	*0.79*	*0.79*	*1.09*						
	FB	2.75	2.75	5	2.75	2.75	6						
		1.09	*1.09*	*1.98*	*1.09*	*1.09*	*2.38*						
	FU	6	4.5	8	6	4.5	9						
		2.38	*1.79*	*3.17*	*2.38*	*1.79*	*3.57*						
Ready Service AGM	**B**	2.75	2.75	6	2.75	2.75	6						
		1.09	*1.09*	*2.38*	*1.09*	*1.09*	*2.38*						
	U	11	11	11	11	11	11						
		4.36	*4.36*	*4.36*	*4.36*	*4.36*	*4.36*						

Notes for Table C9.T25.:

1. Use $d = 2W^{1/3}$ [English EQN C9.T25-1] and [$d = 0.79W^{1/3}$] [Metric EQN C9.T25-2] if the loading density of the ECM exceeds 1.25 lbs/ft^3 [20 kg/m^3]. Do not exceed the maximum NEWQD limit of 22,000 lbs [9,979 kg].
2. If required, use the separation shown regardless of loading density. Do not exceed the maximum NEWQD limit of 22,000 lbs [9,979 kg].
3. Second and third generation HAS are limited to a maximum of 11,000 lbs [4,989.5 kg] per shelter.

Table C9.T26. Minimum Hazard Factor for HAS for Asset Preservation

	From ➔	1st Generation HAS			2nd & 3rd Generation HAS[2]			Ready Service ECM[3]				Ready Service AGM	
To ➔		**S**	**R**	**F**	**S**	**R**	**F**	**S**	**R**	**FB**	**FU**	**B**	**U**
1st Generation HAS	**S**	9	6	9	9	6	9	2.75	2.75	8	8	8	8
		3.57	*2.38*	*3.57*	*3.57*	*2.38*	*3.57*	*1.09*	*1.09*	*3.17*	*3.17*	*3.17*	*3.17*
	R	8	5	8	8	5	8	2.75	2.75	8	8	8	8
		3.17	*1.98*	*3.17*	*3.17*	*1.98*	*3.17*	*1.09*	*1.09*	*3.17*	*3.17*	*3.17*	*3.17*
	F	18	18	18	18	18	18	11	9	18	18	18	18
		7.14	*7.14*	*7.14*	*7.14*	*7.14*	*7.14*	*4.36*	*3.57*	*7.14*	*7.14*	*7.14*	*7.14*
2nd & 3rd Generation HAS	**S**	9	6	9	9	6	9	2.75	2.75	8	8	8	8
		3.57	*2.38*	*3.57*	*3.57*	*2.38*	*3.57*	*1.09*	*1.09*	*3.17*	*3.17*	*3.17*	*3.17*
	R	8	5	8	8	5	8	2.75	2.75	8	8	8	8
		3.17	*1.98*	*3.17*	*3.17*	*1.98*	*3.17*	*1.09*	*1.09*	*3.17*	*3.17*	*3.17*	*3.17*
	F	11	9	18	11	9	18	2.75	2.75	8	8	8	8
		4.36	*3.57*	*7.14*	*4.36*	*3.57*	*7.14*	*1.09*	*1.09*	*3.17*	*3.17*	*3.17*	*3.17*
1st Generation Maintenance HAS[1]	**S**	9	8	9	9	8	9	8	8	8	8	8	8
		3.57	*3.17*	*3.57*	*3.57*	*3.17*	*3.57*	*3.17*	*3.17*	*3.17*	*3.17*	*3.17*	*3.17*
	R	8	8	8	8	8	8	8	8	8	8	8	8
		3.17	*3.17*	*3.17*	*3.17*	*3.17*	*3.17*	*3.17*	*3.17*	*3.17*	*3.17*	*3.17*	*3.17*
	F	18	18	18	18	18	18	11	9	18	18	18	18
		7.14	*7.14*	*7.14*	*7.14*	*7.14*	*7.14*	*4.36*	*3.57*	*7.14*	*7.14*	*7.14*	*7.14*
2nd & 3rd Generation Maintenance HAS[1]	**S**	9	8	9	9	8	9	8	8	8	8	8	8
		3.57	*3.17*	*3.57*	*3.57*	*3.17*	*3.57*	*3.17*	*3.17*	*3.17*	*3.17*	*3.17*	*3.17*
	R	8	8	8	8	8	8	8	8	8	8	8	8
		3.17	*3.17*	*3.17*	*3.17*	*3.17*	*3.17*	*3.17*	*3.17*	*3.17*	*3.17*	*3.17*	*3.17*
	F	11	9	18	11	9	18	8	8	8	8	8	8
		4.36	*3.57*	*7.14*	*4.36*	*3.57*	*7.14*	*3.17*	*3.17*	*3.17*	*3.17*	*3.17*	*3.17*

Notes for Tables C9.T26.:

1. Maintenance HAS shall not be located closer than 300 ft [91.4 m] from any PES HAS sited for more than 500 lbs [226.8 kg] NEWQD.
2. Second and Third generation HAS are limited to a maximum of 11,000 lbs [4,989.5 kg] NEWQD per shelter.
3. Ready service ECM used to support daily loading are limited to 22,000 lbs [9,979 kg] NEWQD per magazine and loading density of not more than 1.25 lbs/ft^3 [20 kg/m^3].

Figure C9.F9. HAS Orientation Effects (see subparagraph C9.6.1.5.3.)

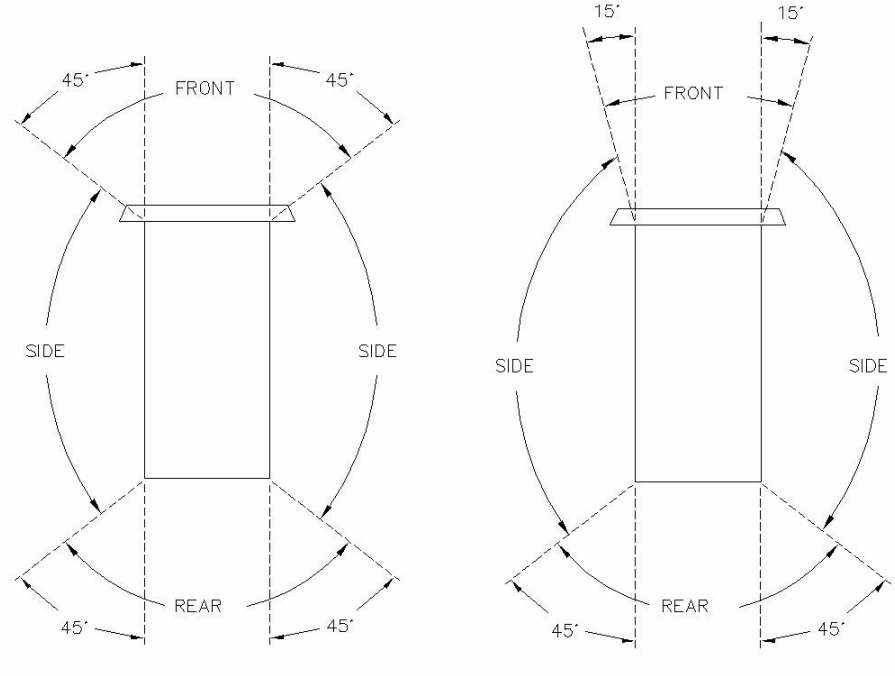

HAS as an ES **HAS as a PES**

Table C9.T27. QD from a U.S. Third Generation HAS PES to an Unhardened ES[1,2,3]

NEWQD (lbs) *[kg]*	Front (ft) *[m]*	Sides (ft) *[m]*	Rear (ft) *[m]*
≤ 4.4	50	50	50
≤ 1.8	*15.2*	*15.2*	*15.2*
4.4 < NEWQD ≤ 110	230	50	50
1.8 < NEWQD ≤ 49.9	*70.1*	*15.2*	*15.2*
110 < NEWQD ≤ 500	230	50	50
49.9 < NEWQD ≤ 226.8	*70.1*	*15.2*	*15.2*
500 < NEWQD ≤ 1,100	230	394	164
226.8 < NEWQD ≤ 498.9	*70.1*	*120.1*	*50*
1,100 < NEWQD ≤ 11,000[4]	K50	K62	K40
498.9 < NEWQD ≤ 4,989.5[4]	K_m *19.84*	K_m *24.60*	K_m *15.86*

Notes for Table C9.T27.:

1. Separation distances are based on shelter doors remaining closed, except for aircraft towing, fueling, servicing, run-up, or taxiing, and during integrated combat turnarounds or short periods when maintenance equipment or munitions are being moved into or out of the shelter. Where doors are left open for extended periods, normal combat aircraft parking area criteria of Table C9.T24. apply.
2. Separate AE from the HAS walls by a distance sufficient to prevent breaching. For less than 1,100 lbs [498.9 kg] NEWQD a 3-ft [0.91 m] separation from the wall is sufficient.
3. These QD criteria apply to IBD, PTRD, and ILD exposures for quantities ≤ 1,100 lbs [498.9 kg] NEWQD.
4. For quantities > 1,100 to 11,000 lbs [498.9 to 4,989.5 kg] NEWQD, these QD only apply to IBD exposures. Use 50 percent of the IBD criteria for PTRD exposures with a 300 ft [91.4 m] minimum distance (out the front or rear) or a 394 ft [120.1 m] minimum distance (off the sides). Use 35 percent of the IBD criteria for intraline exposures with a 300-ft [91.4 m] minimum distance (out the front and rear) or a 394-ft [120.1 m] minimum distance (off the sides).

C9.6.1.6. Combat Aircraft Support Facilities. See subparagraph C9.4.1.1.2.1.11. for separation distance criteria associated with such facilities. When operational necessity dictates, separation distances less than K18 [7.14] may be approved; however, it must be demonstrated that K18 [7.14] equivalent protection is provided.

C9.6.1.7. AE Prohibited Areas. Areas immediately beyond the ends of runways and along primary flight paths are subject to more aircraft accidents than other areas. For this reason, AE is prohibited from Accident Potential Zones (APZ) I and II and Clear Zones (CZ) of all aircraft landing facilities, as designated and described in detail in DoD Component airfield and airspace criteria directives.

C9.6.2. Pier And Wharf Facilities

C9.6.2.1. Scope and Application. QD herein are for HD 1.1 AE. If only AE of other HD are involved, the applicable QD shall be applied. This section:

C9.6.2.1.1. Applies to:

C9.6.2.1.1.1. Ship and barge units, hereafter referred to as ships.

C9.6.2.1.1.2. Piers and wharf and associated facilities at which AE may be handled, or be present in ships' holds or conveyances.

C9.6.2.1.1.3. Loading, off-loading, stowing, and shifting of AE from ships' magazines.

C9.6.2.1.2. Does not apply (i.e., no QD required) to:

C9.6.2.1.2.1. AE in static storage in ships' magazines and intended for the service of shipboard armament or aircraft, provided the Service Secretary formally accepts any explosives risk associated with such storage.

C9.6.2.1.2.2. Handling ≤ 300 lbs [136.1 kg] NEWof combined HD 1.3 and HD 1.4 AE that are necessary for ship's security and safety at sea.

C9.6.2.2. Determining the Quantity of Explosives in a Ship

C9.6.2.2.1. The NEWQD on board a ship shall be determined per section C9.2.

C9.6.2.2.2. When ships are separated by $11W^{1/3}$ [$4.36Q^{1/3}$] distances or greater, QD shall be based individually on the quantity of each ship. Lesser separation distances require that the AE in all ships be totaled.

C9.6.2.3. Measurement of Separation Distances

C9.6.2.3.1. Moored Ships

C9.6.2.3.1.1. Measurement of separation distances between ships or barges shall be from the nearest point of one ship's magazine (i.e., the PES) or the barge:

C9.6.2.3.1.1.1. For IMD: To the nearest point of another ship's magazine or a barge.

C9.6.2. 3.1.1.2. For IBD and PTRD: To the nearest point of another ship or a barge.

C9.6.2.3.1.2. Measurement of separation distances between ships or barges and shore ES shall be from the nearest point of a ship's magazine or the barge to the nearest point of the ES.

C9.6.2.3.2. Pier Operations. Measurement of separation distances from piers to surrounding facilities shall be from the nearest point that AE will be handled to the nearest point of an ES. (NOTE: Movement of railcars or trucks passing through the clear space between ships at a pier or between piers is considered as an operational risk. It is generally impracticable to separate berths at a single pier by enough distance to prevent mass detonation of HD 1.1. To the extent operationally feasible, the number of such exposures and total time required should be reduced to the maximum extent practicable through scheduling.)

C9.6.2.3.3. Anchorages. Measurements from anchorages generally shall be from the boundary of the area designated for the explosives anchorage. The explosives anchorage for a single ship is a circle, the radius of which is the distance from the mooring buoy or a ship's anchor to the stern of the ship or of the AE lighters alongside when riding to the full scope of the chain. For an explosives anchorage, the separation distance to an ES will depend upon whether any ships are separated properly (see subparagraph C9.6.2.2.2.).

C9.6.3. Siting Criteria and Application of QD

C9.6.3.1. Maritime Prepositioning Ships (MPS)

C9.6.3.1.1. Reduced QD criteria may be applied to those MPS that contain up to 1,300,000 lbs [589,667 kg] NEWQD of AE stored in standard International Standardization Organization (ISO) shipping containers.

C9.6.3.1.2. IBD and PTRD for MPS can be determined using K = 40.85 [16.21] with a 3,700-ft [1,128 m] minimum fragment distance for IBD and K = 24.01 [9.52] with a 2,220-ft [677 m] minimum fragment distance for PTRD for MPS loads where no more than 52 percent of the NEWQD is HD 1.1. When the percentage of HD 1.1 is:

C9.6.3.1.2.1. Between 52 and 65 percent, use the IBD and PTRD columns of Table C9.T28.

C9.6.3.1.2.2. Above 65 percent, use the Other PES columns of Table C9.T1. with a 3,700-ft [1,128 m] minimum fragment distance for IBD and a 2,220-ft [677 m] minimum fragment distance for PTRD.

C9.6.3.1.3. The QD between applicable MPS piers/anchorages and non-explosives loading piers/anchorages can be determined using K = 32 [12.69] with a 3,500 ft [1,067 m] minimum fragment distance for MPS loads, where no more than 52 percent of the total NEWQD is HD 1.1. (An exception for non-explosives MPS is provided in subparagraph C9.6.3.8.1.) When the percentage of HD 1.1 is:

C9.6.3.1.3.1. Between 52 and 65 percent, use the Ship-to-Ship column in Table C9.T28.

C9.6.3.1.3.2. Above 65 percent, use K = 40 [15.87] with a minimum fragment distance of 3,500 ft [1,067 m].

Table C9.T28. Variation of MPS QD Factors With Loadout

Percent of HD 1.1	IBD[1]	PTRD[2]	Ship-to-Ship[3]
up to 52	40.85	24.01	32
	16.21	*9.52*	*12.69*
53	40.97	24.08	32.1
	16.25	*9.55*	*12.73*
54	41.1	24.16	32.19
	16.3	*9.58*	*12.77*
55	41.22	24.23	32.29
	16.35	*9.61*	*12.81*
56	41.35	24.3	32.39
	16.4	*9.64*	*12.85*
57	41.47	24.37	32.48
	16.45	*9.67*	*12.88*
58	41.59	24.44	32.58
	16.5	*9.7*	*12.92*
59	41.71	24.52	32.67
	16.55	*9.73*	*12.96*
60	41.83	24.59	32.77
	16.59	*9.75*	*13*
61	41.95	24.66	32.86
	16.64	*9.78*	*13.04*
62	42.07	24.73	32.95
	16.69	*9.81*	*13.07*
63	42.19	24.8	33.05
	16.74	*9.84*	*13.11*
64	42.3	24.86	33.14
	16.78	*9.86*	*13.15*
65	42.42	24.93	33.23
	16.83	*9.89*	*13.18*

Notes for Table C9.T28.:

1. With a minimum fragment distance of 3,700 ft [1,128 m].
2. With a minimum fragment distance of 2,220 ft [677 m].
3. With a minimum fragment distance of 3,500 ft [1,067 m].

C9.6.3.2. Scuttling Site. A properly located scuttling site will, when feasible, be provided for positioning a ship for its flooding or sinking in the event it catches fire and must be moved to avert damage to other ships or piers. The location of a scuttling site shall depend on the greatest NEWQD that may be in a single ship at any one time. (Table C9.T1. provides the applicable QD.) Additional considerations for the scuttling site include:

C9.6.3.2.1. The site should have sufficient maneuvering room and depth to permit sinking the largest vessel that may be handled at the installation so that the holds will be flooded completely at low tide.

C9.6.3.2.2. The scuttling site should provide the best available protection to other ships, piers, and shore installations in the event of a mass explosion.

C9.6.3.3. Explosives Anchorage. Explosives anchorage shall be separated from the main ship channel and from normally traversed routes of ships entering or leaving the harbor by the distances indicated below. (Occasional watercraft passing through the arcs, while outside both the main ship channel and normally traversed routes of ships entering and leaving the harbor, are not subject to QD requirements.)

C9.6.3.3.1. The PTRD from "Other PES" column of Table C9.T1. and

C9.6.3.3.2. The turning circles and stopping distances of other ships passing the anchorage but not less than 3,000 ft [914.4 m].

C9.6.3.3.3. Separation of Ships at Explosives Anchorages. When explosives anchorages are used for both loading and unloading ships and for mooring loaded ships, they shall be separated as follows:

C9.6.3.3.3.1. Loaded ships shall be separated one from another by $18W^{1/3}$ [$7.14Q^{1/3}$].

C9.6.3.3.3.2. Loading and unloading ships shall be separated one from another by $11W^{1/3}$ [$4.36Q^{1/3}$] and, when possible, by $18W^{1/3}$ [$7.14Q^{1/3}$].

C9.6.3.3.3.3. Loaded ships shall be separated from ships loading and unloading by $40W^{1/3}$ [$15.87Q^{1/3}$].

C9.6.3.3.4. Separation of Explosives Anchorages from Explosives Piers. Explosives anchorages shall be separated from explosives piers by $40W^{1/3}$ [$15.87Q^{1/3}$], except when the anchorage is used only for the loading or unloading of ships. In that case, $18W^{1/3}$ [$7.14Q^{1/3}$] may be used.

C9.6.3.4. Separation Distances of Ships at the Same Pier

C9.6.3.4.1. Berthing of two ships in tandem helps decrease the fragment hazard to the AE cargo of the second ship because of the additional protection afforded by the bow or stern.

C9.6.3.4.2. When two ships, which cannot be separated by $11W^{1/3}$ [$4.36Q^{1/3}$], are being loaded through all hatches at the same time, the spotting of railcars or trucks and the loading of hatches in both ships should be planned in a manner that puts the greatest possible distance both between the open hatches, and the trucks and railcars serving the two ships. When possible, the loading of the ships shall be staggered.

C9.6.3.5. Separation of Wharf Yard from the Pier. A wharf yard shall be separated from the pier, which it serves by $11W^{1/3}$ [$4.36Q^{1/3}$] to prevent propagation. If this separation distance cannot be met, then the wharf yard shall be considered as part of the ship or barge and added to it for computation of the total amount of explosives for QD purposes.

C9.6.3.6. Separation of Explosives Ships from Other Ships. Explosives ships being loaded or unloaded shall be separated from non-explosives carrying ships and from loaded explosives ships that are not underway by $40W^{1/3}$ [$15.87Q^{1/3}$] distances. The PTRD from "Other PES" column of Table C9.T1. shall be used for protection of ships that are underway.

C9.6.3.7. Barge Piers. Piers and wharfs used exclusively for loading or unloading AE on barges or utility craft may be sited from other shore facilities as loading docks, IAW paragraph C9.8.8. Shore facilities shall be sited under the same criteria as pier and wharf facilities, in relation to barge piers.

C9.6.3.8. Separation of Preposition Program Ships at Anchorages. The Military Sealift Command's Prepositioning Program (i.e. Combat Prepositioning Force, Maritime Prepositioning Force, Logistics Prepositioning Ships) operates both explosives-loaded and non-explosives carrying ships that are then deployed to key locations around the world. These ships are pre-loaded with military equipment and supplies necessary to support military forces on a short-notice basis and thus support a common mission. The following criteria apply to Prepositioning Program ships at anchorage:

C9.6.3.8.1. Non-explosives carrying ships shall be separated from explosives-loaded ships by a minimum of $18W^{1/3}$ [$7.14Q^{1/3}$].

C9.6.3.8.2. Non-explosives carrying ships shall be separated from non-Prepositioning Program explosives-loaded ships by $40W^{1/3}$ [$15.87Q^{1/3}$].

C9.6.3.8.3. Non-explosives carrying ships not associated with the Prepositioning Program shall be separated from all explosives carrying ships by $40W^{1/3}$ [$15.87Q^{1/3}$].

C9.6.3.8.4. All non-explosives carrying ships shall be separated from explosives ships being loaded or unloaded by $40W^{1/3}$ [$15.87Q^{1/3}$].

C9.6.4. QD Tables

C9.6.4.1. Figure C9.F10. illustrates required hazard factors. Table C9.T7B. provides the corresponding separation distances.

C9.6.4.2. Table C9.T1. separation distances shall be maintained between explosives pier and wharf facilities and other ES (e.g., administration and industrial areas, terminal boundaries, main ship channels, and PTRD).

C9.6.4.3. As an ES, ships must be separated from AE operating and storage facilities (including holding yards) by the "Other PES IBD" column of Table C9.T1.

C9.6.4.4. As a PES, ships must be separated from AE operating facilities by either the barricaded IMD (K6 [2.38]) or unbarricaded IMD (K11 [4.36]) of Table C9.T5., as applicable. An exception (see subparagraph C9.4.1.1.2.1.10.) is permitted when the ES is a container stuffing and unstuffing operation that routinely supports AE ship loading and unloading

operations. (QD requirements of subparagraph C9.6.4.3. shall apply from such container stuffing and unstuffing operations (as a PES) to an AE ship (as an ES).)

C9.6.5. General Cargo and Vehicles at AE Terminals

C9.6.5.1. Concurrent movements of mission-related general cargo, vehicles, and AE through a terminal may be conducted for the purpose of loading or unloading the same ship.

C9.6.5.2. Concurrent operations involving other ships shall be conducted at applicable QD separations. (See Figure C9.F10.)

C9.6.5.3. Separation of inert materials and equipment in holding areas shall be consistent with paragraph C9.8.5.

C9.6.5.3.1. Personnel entering inert holding areas that are located within ESQD shall be limited both in number and time of exposure.

C9.6.5.3.2. Any labor intense activity shall take place at IBD or PTRD, as applicable.

Figure C9.F10. Application of Separation Distances for Ship or Barge

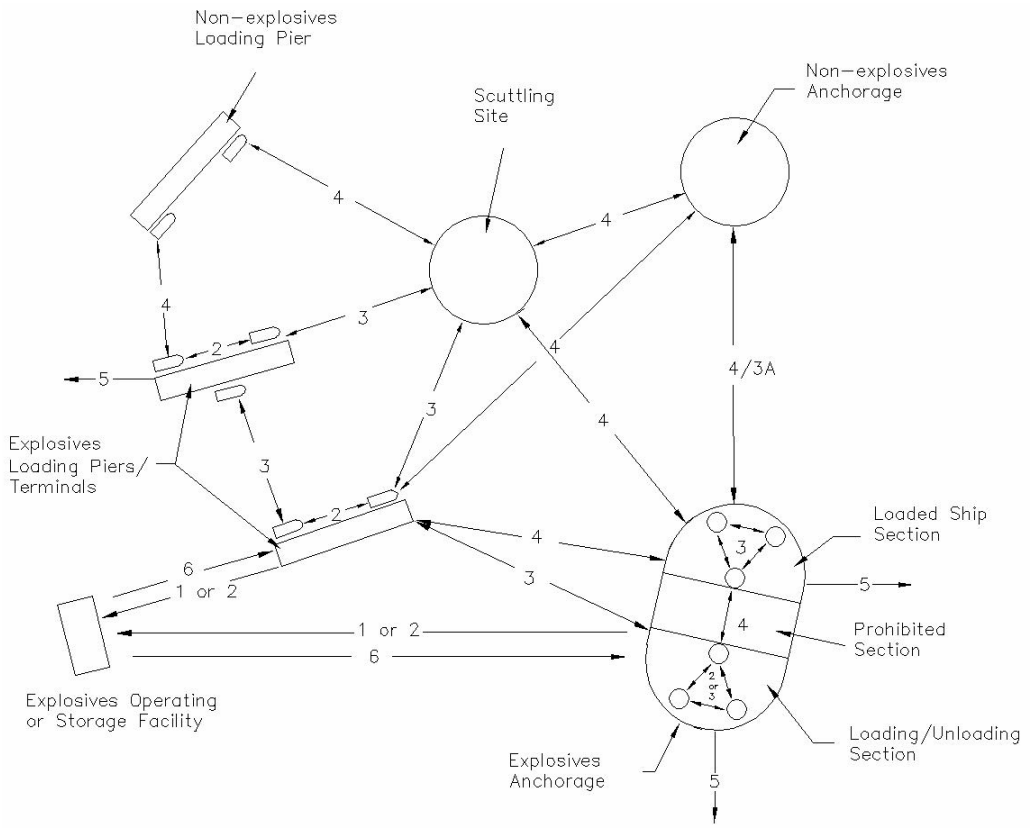

Legend for Figure C9.F10.:

1 - $6W^{1/3}$ [$2.38Q^{1/3}$]

2 - $11W^{1/3}$ [$4.36Q^{1/3}$]

3 - $18W^{1/3}$ [$7.14Q^{1/3}$]

3A - $18W^{1/3}$ [$7.14Q^{1/3}$] (See subparagraph C9.6.3.8. for Prepositioning Program Ships)

Ship or Barge

4 - $40W^{1/3}$ [$15.87Q^{1/3}$]

5 – Table C9.T1. IBD or PTRD (OTHER PES columns), as applicable

6 – Table C9.T1. IBD, as applicable

C9.7. UNDERGROUND STORAGE OF AE

C9.7.1. General

C9.7.1.1. This section provides QD standards for underground storage (e.g., natural caverns and below grade, excavated chambers) and storage facilities providing the overpressure confinement effects typically encountered in underground storage.

C9.7.1.2. These criteria are only applicable when the minimum distance from the perimeter of a storage chamber to an exterior surface exceeds $0.25W^{1/3}$ [$0.10Q^{1/3}$]. (This minimum distance normally, but not always, equals the thickness of the earth cover.)

C9.7.1.3. Use aboveground siting criteria when minimum distance criteria of subparagraph C9.7.1.2. cannot be met.

C9.7.1.4. This section addresses explosives safety criteria both with and without rupture of the earth cover.

C9.7.1.5. QD siting requirements of this section may be determined from the applicable equations or by interpolating between the table and figure entries.

C9.7.1.6. Expected ground shock, debris, and airblast hazards from an accidental explosion in an underground storage facility depend on several variables, including the local geology and site-specific parameters. These parameters vary significantly from facility to facility. Siting distances other than those listed may be used when validated by approved experimental or analytical results showing equivalent protection to that required.

C9.7.2. External QD Determinations

C9.7.2.1. QD Dependence on HD. (See section C9.2. to determine the explosive weight for mixed HD.)

C9.7.2.1.1. HD 1.1. Distances shall be determined from the total quantity of HD 1.1 in the individual chambers, unless the total quantity is subdivided to prevent rapid communication of an incident from one subdivision to another. Connected chambers containing HD 1.1 shall be treated as a single chamber site, unless explosion communication is prevented by adequate subdivision or chamber separation.

C9.7.2.1.2. HD 1.2. Except for primary fragments from openings to underground storage, external explosives safety hazards are not normally significant for HD 1.2. The safe distance for both IBD and PTR is the IBD distance in Tables C9.T8. through C9.T12. for locations within 10 degrees to either side of the centerline of a tunnel opening. These criteria apply only to those detonations that occur where a line-of-sight path exists from the detonation point to any portion of the tunnel opening. For detonations that do not have a line-of-sight path to the tunnel opening, or where the line-of-sight path is intercepted by a barricade beyond the opening, the IBD and PTR hazard distances are zero.

C9.7.2.1.3. HD 1.3. HD 1.3 shall be treated as HD 1.1 with an explosive equivalence of 100 percent for QD purposes. Any significant and validated differences in energy release per unit mass of HD 1.3 from that of TNT may be considered.

C9.7.2.1.4. HD 1.4. External explosives safety hazards are not normally significant for HD 1.4. Accordingly, external QD criteria do not apply for HD 1.4.

C9.7.2.1.5. HD 1.5. HD 1.5 shall be treated as HD 1.1 with an explosive equivalence of 100 percent for QD purposes.

C9.7.2.1.6. HD 1.6. HD 1.6 shall be treated as HD 1.2.

C9.7.2.2. QD Reference Points

C9.7.2.2.1. Distances determined by blast or debris exiting from tunnel openings is the minimum distance measured from the openings to the nearest wall or point of the location to be protected. Use extended centerlines of the openings as reference lines for directional effects.

C9.7.2.2.2. Distances determined for airblast and debris produced by breaching of the chamber cover shall be the minimum distance from an exterior point defined by chamber cover thickness, on the ground surface above the storage chamber to the nearest wall or point of the location to be protected. For configurations where the storage chambers are not distinct from the access tunnel**,** the distance is the shortest distance from the tunnel roof directly above the charge to the surface.

C9.7.2.2.3. Distances determined for ground shock shall be the minimum distance measured from the nearest wall of the storage chamber to the location to be protected.

C9.7.2.3. IBD. IBD for HD 1.1 shall be the largest of those distances required for protection against ground shock, debris, and airblast as defined below.

C9.7.2.3.1. Ground Shock

C9.7.2.3.1.1. For protection of residential buildings against significant structural damage by ground shock, the maximum particle velocity induced in the ground at the building site shall not exceed:

C9.7.2.3.1.1.1. 2.4 ips [6.1 cm/s] in soil.

C9.7.2.3.1.1.2. 4.5 ips [11.4 cm/s] in weak rock.

C9.7.2.3.1.1.3. 9.0 ips [22.9 cm/s] in strong rock.

C9.7.2.3.1.2. The above values form the basis for the following equations (NOTE: D_{ig} is in ft and W is the explosive quantity in lb [D_{ig} is in m and Q is the explosive quantity in kg].):

C9.7.2.3.1.2.1. For sitings in moderately strong to strong rock with chamber loading densities [NEWQD/chamber internal volume] of 3.0 lb/ft^3 [48.1 kg/m^3] or less, the IBD for ground shock, D_{ig} is:

$D_{ig} = 5.8W^{1/3}$ [English EQN C9.7-1]
$D_{ig} = 2.30Q^{1/3}$ [Metric EQN C9.7-2]

C9.7.2.3.1.2.2. For higher loading densities in chambers sited in moderately strong to strong rock, and for all loading densities in other materials, the IBD for ground shock (See C9.7.2.3.1.2.3. for values of decoupling factor, f_g.) is:

$D_{ig} = 12.5f_gW^{4/9}$ (Moderately strong to strong rock) [English EQN C9.7-3]
$D_{ig} = 5.41f_gQ^{4/9}$ (Moderately strong to strong rock) [Metric EQN C9.7-4]
$D_{ig} = 11.1f_gW^{4/9}$ (Weak rock) [English EQN C9.7-5]
$D_{ig} = 4.81f_gQ^{4/9}$ (Weak rock) [Metric EQN C9.7-6]
$D_{ig} = 2.1f_gW^{4/9}$ (Soil) [English EQN C9.7-7]
$D_{ig} = 0.91f_gQ^{4/9}$ (Soil) [Metric EQN C9.7-8]

C9.7.2.3.1.2.3. The dimensionless, decoupling factor, f_g, depends on chamber loading density, w (lb/ft^3 [kg/m^3]), and is (Values of D_{ig} and D_{ig}/f_g are given in Table C9.T29. Values of f_g are shown in Table C9.T30. Alternate values for D_{ig} may be used only when justified by site-specific ground shock data.):

$f_g = 0.267w^{0.3}$ [English EQN C9.7-9]
$f_g = 0.11604w^{0.3}$ [Metric EQN C9.7-10]

C9.7.2.3.2. <u>Debris</u>. (See paragraph C5.2.3. for special design considerations.)

C9.7.2.3.2.1. A minimum IBD distance of 1,800 ft [548.6 m] for debris throw from an opening shall apply within 10 degrees to either side of the centerline axis of that opening, unless positive means are used to prevent or control the debris throw.

C9.7.2.3.2.2. The distance D_{id} that is required for protection of inhabited areas against the effects of debris thrown from breaching of the cover material over a detonation depends on the thickness of the cover (C) over the storage chamber. The critical cover thickness, C_c, is defined as $2.5W^{1/3}$ [$1.0Q^{1/3}$].

C9.7.2.3.2.2.1. When $C_c \geq 2.5W^{1/3}$ [$1.0Q^{1/3}$], debris from a surface breach need not be considered.

C9.7.2.3.2.2.2. When $C_c < 2.5W^{1/3}$ [$1.0Q^{1/3}$], then the debris distance, D_{id} shall be calculated using the equation:

$D_{id} = f_d * f_c * W^{0.41}$ [English EQN C9.7-11]
$D_{id} = f_d * f_c * Q^{0.41}$ [Metric EQN C9.7-12]

C9.7.2.3.2.2.3. The dimensionless, decoupling factor, f_d depends on chamber loading density, w (lb/ft^3 [kg/m^3]), and is:

$f_d = 0.6w^{0.18}$ [English EQN C9.7-13]
$f_d = 0.3615\ w^{0.18}$ [Metric EQN C9.7-14]

C9.7.2.3.2.2.4. Values of f_d are shown in Table C9.T30. The coupling factor f_c is related to the type of rock around the storage chamber and the scaled cover thickness, C. Values of fc are given in Table C9.T31.

C9.7.2.3.3. Airblast. (See paragraph C5.2.3. for special design considerations.)

C9.7.2.3.3.1. An explosion in an underground storage chamber may produce external airblast from two sources; the exit of blast from existing openings (tunnel entrances, ventilation shafts, etc.) and the rupture or breach of the chamber cover by the detonation. Required IBD is independently determined for each of these airblast sources, with the maximum IBD used for siting. If the chamber cover thickness is less than C_c given in subparagraph C9.7.2.3.2., some external airblast will be produced depending on the cover thickness. Use the following to determine IBD for airblast produced by breaching of the chamber cover:

Table C9.T29. Distances to Protect Against Ground Shock

NEWQD	Soil	Weak Rock	Moderately strong to strong rock	All rock w < 3 lb/ft^3 [w<48.1 kg/m^3]
	D_{ig}/f_g			D_{ig}
(lbs)	(ft)	(ft)	(ft)	(ft)
[kg]	*[m]*	*[m]*	*[m]*	*[m]*
1,000	45	239	269	58
453.6	*13.8*	*72.9*	*82.0*	*17.7*
1,500	54	286	322	66
680.4	*16.5*	*87.3*	*98.2*	*20.2*
2,000	62	325	366	73
907.2	*18.8*	*99.2*	*111.6*	*22.3*
3,000	74	390	439	84
1,361	*22.5*	*118.8*	*133.7*	*25.5*
5,000	93	489	551	99
2,268	*28.2*	*149.1*	*167.7*	*30.2*
7,000	107	568	640	111
3,175	*32.8*	*173.2*	*194.8*	*33.8*
10,000	126	665	749	125
4,536	*38.4*	*345.3*	*228.2*	*38.1*
15,000	151	797	897	143
6,804	*46.0*	*243.0*	*273.3*	*43.6*
20,000	171	906	1,020	157
9,072	*52.2*	*276.1*	*528.4*	*48.0*
30,000	205	1,084	1,221	180
13,608	*62.6*	*330.7*	*371.9*	*54.9*
50,000	257	1,361	1,532	214
22,680	*78.5*	*414.9*	*466.7*	*65.1*
70,000	299	1,580	1,779	239
31,751	*91.2*	*481.9*	*542.0*	*72.8*
100,000	350	1,852	2,085	269
45,359	*106.8*	*564.6*	*635.1*	*82.0*
150,000	419	2,217	2,497	308
68,039	*127.9*	*676.1*	*760.5*	*93.9*
200,000	477	2,520	2,837	339
90,718	*145.4*	*768.4*	*864.2*	*103.3*
300,000	571	3,017	3,398	388
136,077	*174.1*	*920.1*	*1,034.9*	*118.3*
500,000	716	3,786	4,264	460
226,795	*218.4*	*1,154.6*	*1,298.6*	*140.3*
700,000	832	4,397	4,951	515
317,513	*253.7*	*1,340.8*	*1,508.1*	*156.9*
1,000,000	975	5,152	5,802	580
453,590	*297.2*	*1,571.2*	*1,767.1*	*176.7*

Table C9.T30. Functions of Loading Density

Loading Density, w (lb/ft^3) *[kg/m^3]*	**Ground Shock** f_g	**Debris** f_d
1 *16.0*	0.267	0.600
1.5 *24.0*	0.301	0.645
2 *32.0*	0.328	0.680
3 *48.1*	0.371	0.730
5 *80.1*	0.432	0.800
7 *112.1*	0.481	0.850
10 *160.2*	0.532	0.910
15 *240.3*	0.601	0.977
20 *320.3*	0.655	1.030
30 *480.5*	0.740	1.110
50 *800.9*	0.862	1.210
70 *1121.2*	0.954	1.290
100 *1601.7*	1.062	1.370

Table C9.T31. Debris Dispersal Function

Scaled Earth Cover (C) ($ft/lb^{1/3}$) *[$m/kg^{1/3}$]*	**Earth Cover Function, f_c**	
	Hard Rock[1] ($ft/lb^{0.41}$) *[$m/kg^{0.41}$]*	**Soft Rock[1] ($ft/lb^{0.41}$)** *[$m/kg^{0.41}$]*
0.3	9.51	9.80
0.12	*4.01*	*4.13*
0.4	10.25	10.69
0.16	*4.32*	*4.51*
0.5	10.94	11.52
0.20	*4.61*	*4.85*
0.6	11.49	12.08
0.24	*4.84*	*5.09*
0.7	11.89	12.28
0.28	*5.01*	*5.17*
0.8	12.09	12.09
0.32	*5.10*	*5.10*
0.9	12.11	11.55
0.36	*5.10*	*4.87*
1	11.95	10.72
0.40	*5.04*	*4.52*
1.25	10.91	7.99
0.50	*4.60*	*3.37*
1.5	9.31	5.38
0.60	*3.92*	*2.27*
1.75	7.58	3.68
0.69	*3.20*	*1.55*
2	6.04	2.79
0.79	*2.54*	*1.18*
2.25	4.78	2.13
0.89	*2.01*	*0.90*
2.5	3.76	1.54
0.99	*1.58*	*0.65*

Notes for Table C9.T31.:

1. Scaled earth cover, C in $ft/lb^{1/3}$, fc in $ft/lb^{0.41}$
   $0.25\ ft/lb^{1/3} < C \leq 2.5\ ft/lb^{1/3}$
   Hard Rock:
   $$f_c = 8.0178 - 0.1239*C + 27.1578*C^2 - 40.1461*C^3 + 21.9018*C^4 - 5.3529*C^5 + 0.4948*C^6$$
   [English EQN C9.T31-1]
   Soft Rock:
   $$f_c = 10.8116 - 25.0685*C + 113.9591*C^2 - 168.1092*C^3 + 107.1033*C^4 - 31.5032*C^5 + 3.5251*C^6$$
   [Metric EQN C9.T31-2]
   Scaled earth cover, C in $m/kg^{1/3}$, f_c in $m/kg^{0.41}$
   $0.10\ m/kg^{1/3} < C < 1.0\ m/kg^{1/3}$
   Hard Rock:
   $$f_c = 3.3794 - 0.1316*C + 72.7376*C^2 - 271.0478*C^3 + 372.7526*C^4 - 229.651*C^5 + 53.5115*C^6$$
   [Metric EQN C9.T31-3]

Soft Rock:

$f_c = 4.5570 – 26.6351*C + 305.2201*C^2 – 1134.995*C^3 + 1822.82*C^4 – 1351.556*C^5 + 381.2317*C^6$ [Metric EQN C9.T31-4]

C9.7.2.3.3.1.1. $C \leq 0.25W^{1/3}$ ft [$0.10Q^{1/3}$ m]: Use IBD for surface burst of bare explosives charge (Table C9.T1., Note 4).

C9.7.2.3.3.1.2. $0.25W^{1/3} < C \leq 0.50W^{1/3}$ ft [$0.10Q^{1/3} < C \leq 0.20Q^{1/3}$ m]: Use 1/2 of IBD for surface burst of bare explosives charge.

C9.7.2.3.3.1.3. $0.50W^{1/3} < C \leq 0.75W^{1/3}$ ft [$0.20Q^{1/3} < C \leq 0.30Q^{1/3}$ m]: Use 1/4 of IBD for surface burst of bare explosives charge.

C9.7.2.3.3.1.4. $0.75W^{1/3}$ ft [$0.30*Q^{1/3}$ m] < C: Airblast hazards from blast through the earth cover are negligible relative to ground shock or debris hazards.

C9.7.2.3.3.2. Overpressure and debris hazards must be determined for each facility opening whose cross-section area is five percent or more of that of the largest opening.

C9.7.2.3.3.2.1. Distance versus overpressure along the centerline axis of a single opening is:

$R = 149.3*D_{HYD}*((W/V_E)^{0.5}/p_{SO})^{1/1.4}$ [English EQN C9.7-15]

$R = 220.191*D_{HYD}*((W/V_E)^{0.5}/p_{SO})^{1/1.4}$ [Metric EQN C9.7-16]

where:

R: Distance from opening (ft) [m],

D_{HYD}: Effective hydraulic diameter that controls dynamic flow issuing from the opening (feet) [m] (Compute D, using the minimum, cross-sectional area of the tunnel that is located within five tunnel diameters of the opening, as D = 4A/P, where A is the area and P is the perimeter.),

P_{SO}: Overpressure at distance R (psi) [kPa],

W: MCE in lb [kg],

$V_{E:}$ Total volume engulfed by the blast wavefront within the tunnel system at the time the wavefront arrives at the point of interest (ft^3) [m^3].

C9.7.2.3.3.2.2. Distance versus overpressure off the centerline axis of the opening is:

$R(\theta) = R(\theta=0)/(1 + (\theta/56)^2)^{1/1.4}$ [English EQN C9.7-17]

where:

$R(\theta =0)$ Distance along the centerline axis, and θ is the horizontal angle from the centerline (degrees).

C9.7.2.3.3.3. Equations [English EQN C9.7-15] [Metric EQN C9.7-16], and [English EQN C9.7-17] show that the distance providing protection from an overpressure exceeding P_{SO} depends on the D_{HYD}, and the angle from the centerline axis for the location of interest. Table C9.T32. gives the ratio of off-axis to on-axis distances.

C9.7.2.3.3.4. Find required IBD distances for airblast using the appropriate equations discussed above, with the criteria that the total incident overpressure at IBD shall not exceed:

P_{SO} = 1.2 psi	for W $\leq$ 100,000 lbs,	
P_{SO} = 8.27 kPa	for W $\leq$ 45,359 kg,	
$P_{SO} = 44.57*W^{-0.314}$ psi	for 100,000 < W $\leq$ 250,000 lbs	[English EQN C9.7-18]
$P_{SO} = 239.753*W^{-0.314}$ kPa	for 45,359 < W $\leq$ 113,397.5 kg.	[Metric EQN C9.7-19]
P_{SO} = 0.9 psi	for W > 250,000 lbs.	
P_{SO} = 6.21 kPa	for W > 113,397.5 kg.	

C9.7.2.3.3.5. For the overpressures of subparagraph C9.7.2.3.3.4, on-axis IBD distances are:

$R = 131.1*D_{HYD}*(W/V_E)^{1/2.8}$	for W $\leq$ 100,000 lbs,	[English EQN C9.7-20]
$R = 48.683*D_{HYD}*(W/V_E)^{1/2.8}$	for W $\leq$ 45,359 kg,	[Metric EQN C9.7-21]
$R = 9.91*D_{HYD}*W^{0.581}/V_E^{0.357}$	for 100,000 <W $\leq$ 250,000 lbs,	
----		[English EQN C9.7-22]
$R = 4.395*D_{HYD}*W^{0.581}/V_E^{0.357}$	for 45,3599 < W $\leq$ 113,397.5 kg,	
----		[Metric EQN C9.7-23]
$R = 161.0*D_{HYD}*(W/V_E)^{1/2.8}$	for W > 250,000 lbs	[English EQN C9.7-24]
$R = 59.787*D_{HYD}*(W/V_E)^{1/2.8}$	for W > 113,397.5 kg.	[Metric EQN C9.7-25]

C9.7.2.3.3.6. QD distances for IBD for airblast may be determined from the equations listed above or from entries in Tables C9.T33. and C9.T34.

C9.7.2.4. PTRD. PTRD for HD 1.1 is 60 percent of IBD for ground shock, debris, or airblast, whichever is greater.

C9.7.2.5. ILD. ILD for HD 1.1 is the greater of the following:

C9.7.2.5.1. Ground Shock. Does not apply.

C9.7.2.5.2. Debris. For locations within 10 degrees of either side of the centerline of a tunnel opening, site intraline facilities at IBD (see subparagraph C9.7.2.3.). QD criteria for debris are not applicable to locations outside 10 degrees of either side of the centerline axis of an opening.

C9.7.2.5.3. Airblast. Overpressure at barricaded and unbarricaded intraline distances shall not exceed 12 psi [82.7 kPa] and 3.5 psi [24.1 kPa], respectively.

Table C9.T32. Off-Axis Distance Ratios

ANGLE OFF-AXIS (θ) (degrees)	**DISTANCE RATIO[1] (R(θ)/R**
0	1.000
5	0.994
10	0.978
15	0.952
20	0.918
25	0.878
30	0.835
35	0.790
40	0.745
45	0.701
50	0.658
55	0.617
60	0.579
65	0.544
70	0.511
75	0.480
80	0.452
85	0.426
90	0.402
100	0.359
110	0.323
120	0.292
130	0.266
140	0.243
150	0.223
160	0.206
170	0.190
180	0.177

Note for Table C9.T32.:

1. $R(\theta)/R = [1+(\theta/56)^2]^{(-1/1.4)}$ [English EQN C9.T32-1]

C9.7.2.6. Distance to AGM for HD 1.1

C9.7.2.6.1. Ground Shock. Does not apply.

C9.7.2.6.2. Debris. For locations within 10 degrees of either side of the centerline of an opening, site aboveground magazines at IBD (see subparagraph C9.7.2.3.). QD criteria for debris from rupture of the chamber cover are not applicable.

C9.7.2.6.3. Airblast. Overpressure at barricaded and unbarricaded AGM distance shall not exceed 27 and 8 psi [186.2 and 55.2 kPa], respectively.

C9.7.2.7. Distance to ECM for HD 1.1

C9.7.2.7.1. Ground Shock. Does not apply.

C9.7.2.7.2. Debris. QD criteria for debris from rupture of the chamber cover are not applicable. QD criteria for debris exiting from an opening are not applicable, if the magazine is oriented for side-on or rear-on exposures to the debris; however, the criteria do apply for frontal exposures. Site ECM that are located within 10 degrees of either side of the centerline of an opening and oriented for a frontal debris exposure at IBD (see subparagraph C9.7.2.3.).

C9.7.2.7.3. Airblast. These sitings are based on the strength of the ECM's headwall and doors that are under consideration, and the overpressures calculated using equations [English EQN C9.7-15] [Metric EQN C9.7-16], and [English EQN C9.7-17].

C9.7.2.7.3.1. Head-On Exposure Criteria:

C9.7.2.7.3.1.1. 7-Bar ECM: Site where p_{SO} is $\leq$ 29 psi [200 kPa].

C9.7.2.7.3.1.2. 3-Bar ECM: Site where p_{SO} is $\leq$ 16 psi [110.3 kPa].

C9.7.2.7.3.1.3. Undefined ECM: Site where p_{SO} is $\leq$ 3.5 psi [24.1 kPa].

C9.7.2.7.3.2. Other Than Head-On Exposure. Site all ECM where p_{SO} is $\leq$ 45 psi [310.3 kPa].

Table C9.T33. Values for Ratio, $D_{HYD}/V_E^{1/2.8}$

V_E	$D_{HYD}/V_E^{1/2.8}$					
	Effective Hydraulic Diameter, D_{HYD} (ft) *[m]*					
(ft^3)	**10**	**15**	**20**	**25**	**30**	**35**
[m^3]	***3.05***	***4.57***	***6.10***	***7.62***	***9.14***	***10.67***
1,000	0.8483	1.2725	1.6967	2.1209	2.5450	2.9692
28.32	*3.0298*	*4.5447*	*6.0596*	*7.5745*	*9.0894*	*10.6043*
1,500	0.7340	1.1010	1.4680	1.8349	2.2019	2.5689
42.48	*2.6213*	*3.9320*	*5.2427*	*6.5533*	*7.8640*	*9.1747*
2,000	0.6623	0.9935	1.3246	1.6558	1.9869	2.3181
56.63	*2.3654*	*3.5481*	*4.7308*	*5.9135*	*7.0962*	*8.2788*
3,000	0.5730	0.8595	1.1460	1.4326	1.7191	2.0056
84.95	*2.0465*	*3.0698*	*4.0930*	*5.1163*	*6.1395*	*7.1628*
5,000	0.4775	0.7162	0.9549	1.1937	1.4324	1.6711
141.58	*1.7052*	*2.5578*	*3.4104*	*4.2630*	*5.1157*	*5.9683*
7,000	0.4234	0.6351	0.8468	1.0585	1.2702	1.4819
198.22	*1.5121*	*2.2682*	*3.0243*	*3.7803*	*4.5364*	*5.2925*
10,000	0.3728	0.5591	0.7455	0.9319	1.1183	1.3047
283.17	*1.3313*	*1.9969*	*2.6626*	*3.3282*	*3.9938*	*4.6595*
15,000	0.3225	0.4838	0.6450	0.8063	0.9675	1.1288
424.75	*1.1518*	*1.7277*	*2.3036*	*2.8795*	*3.4554*	*4.0313*
20,000	0.2910	0.4365	0.5820	0.7275	0.8731	1.0186
566.34	*1.0393*	*1.5590*	*2.0787*	*2.5984*	*3.1180*	*3.6377*
30,000	0.2518	0.3777	0.5036	0.6295	0.7554	0.8812
849.51	*0.8992*	*1.3488*	*1.7985*	*2.2481*	*2.6977*	*3.1473*
50,000	0.2098	0.3147	0.4196	0.5245	0.6294	0.7343
1,415.84	*0.7493*	*1.1239*	*1.4985*	*1.8732*	*2.2478*	*2.6224*
70,000	0.1860	0.2791	0.3721	0.4651	0.5581	0.6511
1,982.18	*0.6644*	*0.9966*	*1.3289*	*1.6611*	*1.9933*	*2.3255*
100,000	0.1638	0.2457	0.3276	0.4095	0.4914	0.5733
2,831.68	*0.5850*	*0.8774*	*1.1699*	*1.4624*	*1.7549*	*2.0474*
150,000	0.1417	0.2126	0.2834	0.3543	0.4251	0.4960
4,247.53	*0.5061*	*0.7592*	*1.0122*	*1.2653*	*1.5183*	*1.7714*
200,000	0.1279	0.1918	0.2557	0.3197	0.3836	0.4476
5,663.37	*0.4567*	*0.6850*	*0.9134*	*1.1417*	*1.3701*	*1.5984*
300,000	0.1106	0.1660	0.2213	0.2766	0.3319	0.3872
8,495.05	*0.3951*	*0.5927*	*0.7902*	*0.9878*	*1.1854*	*1.3829*
500,000	0.0922	0.1383	0.1844	0.2305	0.2766	0.3226
14,158.42	*0.3292*	*0.4938*	*0.6585*	*0.8231*	*0.9877*	*1.1523*
700,000	0.0817	0.1226	0.1635	0.2044	0.2452	0.2861
19,821.79	*0.2919*	*0.4379*	*0.5839*	*0.7299*	*0.8758*	*1.0218*
1,000,000	0.0720	0.1080	0.1439	0.1799	0.2159	0.2519
28,316.84	*0.2570*	*0.3855*	*0.5141*	*0.6426*	*0.7711*	*0.8996*
1,500,000	0.0623	0.0934	0.1245	0.1557	0.1868	0.2179
42,475.27	*0.2224*	*0.3336*	*0.4448*	*0.5559*	*0.6671*	*0.7783*
2,000,000	0.0562	0.0843	0.1124	0.1405	0.1686	0.1967
56,633.69	*0.2007*	*0.3010*	*0.4013*	*0.5017*	*0.6020*	*0.7023*

Table C9.T34. Scaled IBD for Airblast Without Mitigating Devices[1, 2]

NEWQD (lbs) *[kg]*	$R(\theta)/(D_{HYD}/V_E^{1/2.8})$ Horizontal Angle from Centerline Axis (Degrees) 0	30	60	90	120	180
1,000	1,545	1,290	895	621	452	273
453.6	*432.8*	*361.4*	*250.7*	*173.9*	*126.6*	*76.4*
1,500	1,786	1,491	1,034	718	522	315
680.4	*500.2*	*417.7*	*289.7*	*201.0*	*146.3*	*88.3*
2,000	1,979	1,653	1,146	795	579	349
907.2	*554.3*	*462.9*	*321.1*	*222.8*	*162.1*	*97.9*
3,000	2,287	1,910	1,325	919	669	404
1,361	*640.7*	*535.0*	*371.1*	*257.5*	*187.4*	*113.1*
5,000	2,745	2,292	1,590	1,103	803	485
2,268	*768.9*	*642.1*	*445.4*	*309.0*	*224.9*	*135.8*
7,000	3,096	2,585	1,793	1,244	905	547
3,175	*867.1*	*724.1*	*502.2*	*348.5*	*253.6*	*153.1*
10,000	3,516	2,936	2,037	1,413	1,028	621
4,536	*984.9*	*822.5*	*570.5*	*395.8*	*288.0*	*173.9*
15,000	4,064	3,394	2,354	1,633	1,188	718
6,804	*1,138.4*	*950.6*	*659.4*	*457.5*	*332.9*	*201.0*
20,000	4,504	3,761	2,609	1,810	1,317	795
9,072	*1,261.5*	*1,053.5*	*730.7*	*507.0*	*368.9*	*222.8*
30,000	5,206	4,347	3,015	2,092	1,522	919
13,608	*1,458.1*	*1,217.6*	*844.6*	*586.0*	*426.4*	*257.5*
50,000	6,247	5,217	3,619	2,511	1,827	1,103
22,680	*1,749.9*	*1,461.3*	*1,013.6*	*703.3*	*511.7*	*309.0*
70,000	7,045	5,883	4,081	2,831	2,060	1,244
31,751	*1,973.4*	*1,647.9*	*1,143.0*	*793.1*	*577.1*	*348.5*
100,000	8,002	6,683	4,635	3,216	2,340	1,413
45,359	*2,241.5*	*1,871.8*	*1,298.3*	*900.8*	*655.5*	*395.8*
150,000	9,249	7,724	5,357	3,717	2,705	1,633
68,039	*2,837.8*	*2,369.8*	*1,643.7*	*1,140.5*	*829.9*	*501.1*
200,000	11,977	10,002	6,937	4,813	3,502	2,115
90,718	*3,354.9*	*2,801.6*	*1,943.2*	*1,348.3*	*981.1*	*592.4*
300,000	14,550	12,150	8,427	5,848	4,255	2,569
136,077	*4,071.9*	*3,400.4*	*2,358.5*	*1,636.5*	*1,190.8*	*719.0*
500,000	17,462	14,582	10,114	7,018	5,106	3,083
226,795	*4,886.9*	*4,081.0*	*2,830.5*	*1,964.0*	*1,429.1*	*862.9*
700,000	19,691	16,444	11,406	7,914	5,759	3,477
317,513	*5,510.9*	*4,602.1*	*3,192.0*	*2,214.8*	*1,611.6*	*973.1*
1,000,000	22,367	18,678	12,955	8,989	6,541	3,949
453,590	*6,259.5*	*5,227.3*	*3,625.6*	*2,515.7*	*1,830.5*	*1,105.3*

Notes for Table C9.T34.:

1. IBD for airblast without airblast mitigating devices:

$R(\theta)/(D_{HYD}/V_E^{1/1.4}) = 149.3*\{W^{0.5}/[p_{SO}(1+(\theta/56)^2)]\}^{1/1.4}$ [English EQN C9.T34-1]

where: $p_{SO} = 1.2$ psi $W \leq 100{,}000$ lbs

$p_{SO} = 44.57* W^{-0.314}$ psi $100{,}000 < W \leq 250{,}000$ lbs [English EQN C9.T34-2]

$p_{SO} = 0.9$ psi $W > 250{,}000$ lbs

$R(\theta)/(D_{HYD}/V_E^{1/1.4}) = 149.3*\{W^{0.5}/[p_{SO}(1+(\theta/56)^2)]\}^{1/1.4}$ [Metric EQN C9.T34-3]

where: $p_{SO} = 8.27$ kPa $W \leq 43{,}590$ kg

$p_{SO} = 239.759* W^{-0.314}$ kPa $43{,}590 < W \leq 113{,}397.5$ kg [Metric EQN C9.T34-4]

$p_{SO} = 6.21$ kPa $W > 113{,}397.5$ kg

2. For IBD reductions with mitigating devices, see C5.2.3.3.

C9.8. FACILITIES SITING CRITERIA

This section establishes criteria for siting AE and non-AE facilities with respect to PES.

C9.8.1. Administration and Industrial Areas and Auxiliary Facilities

C9.8.1.1. Administration and industrial areas shall be separated from a PES by IBD.

C9.8.1.2. Auxiliary facilities (e.g., heating plants, line offices, break areas, briefing rooms for daily work schedules or site safety matters, joiner shops, security posts, and similar functions) located at or near AE operations and servicing only one building or operation may be located at fire protection distance (50 ft [15.2 m] for non-combustible structures, 100 ft [30.5 m] for combustible structures) from the building or operation they support.

C9.8.2. Classification Yard

C9.8.2.1. For protection of the classification yard from a PES, separation distances shall be at least the applicable IMD.

C9.8.2.2. Specific QD separation is not required from the classification yard to ES when the classification yard is used exclusively for:

C9.8.2.2.1. Receiving, dispatching, classifying, and switching of cars.

C9.8.2.2.2. Interchanging of trucks, trailers, or railcars between the common carrier and the DoD activity.

C9.8.2.2.3. Conducting external inspection of motor vehicles or railcars, or opening of free-rolling doors of railcars for the purpose of removing documents and making a visual inspection of the cargo.

C9.8.2.3. Specific QD separation applies if the classification yard is used for any other purpose.

C9.8.3. Areas for Burning AE. Use the QD formula described in subparagraph C2.2.1.3. and the requirements in subparagraphs C9.8.3.1. through C9.8.3.3. to determine safe locations for burning AE.

C9.8.3.1. Use K24 [9.52] in the QD formula to determine the minimum safe distance for either personnel burning AE or those conducting unrelated AE operations.

C9.8.3.2. Use K40 [15.87] in the QD formula to determine the safe distance for persons not performing AE operations. However, if the NEWQD of burn material is more than 450 lbs [204 kg], the minimum safe distance shall be at least 1,250 ft [381 m]. If the NEWQD of burn material is $\leq$ 450 lbs [204 kg], use the minimum HFD given in Table C9.T2.

C9.8.3.3. Locate burning grounds at ILD from other PES.

C9.8.4. Areas Used for Intentional Detonations

C9.8.4.1. General

C9.8.4.1.1. Protective structures for personnel or measures to suppress blast or fragment effects may be used to reduce the required withdrawal distances.

C9.8.4.1.2. Control sites for intentional detonations for AE disposals, live-fire demonstrations, and Explosive Ordnance Disposal (EOD) non-emergency operations must be at ILD from other PES, based on the PES's NEWQD.

C9.8.4.2. The minimum separation distances between areas used for intentional detonation (excluding hands-on training) and nonessential personnel are determined by application of the criteria given below. If the minimum separation distance requirements for previously approved DDESB sitings or those prescribed in this section cannot be met, then personnel shall be provided the protection specified in paragraph C4.3.2.

C9.8.4.2.1. For non-fragmenting AE, use $d = 328W^{1/3}$ but not less than 1,250 ft [$d = 130.1Q^{1/3}$, but not less than 381 m]. If known, maximum debris throw distance, with a safety factor determined by the DoD Component, may be used to replace the 1,250 ft [381 m] minimum distance.

C9.8.4.2.2. For fragmenting AE use the larger of the two distances below:

C9.8.4.2.2.1. The distance determined from the equation $d = 328W^{1/3}$ but not less than 1,250 ft [$d = 130.1Q^{1/3}$ but not less than 381 m].

C9.8.4.2.2.2. The distances given in Table C9.T35., based on the diameter of the AE being destroyed. A calculated or measured maximum fragment throw distance (including the interaction effects for stacks of items or single items, whichever applies), with a safety factor determined by the DoD Component, may be used to replace these distances. Calculated case fragment maximum throw distances for selected munitions are given in Table C9.T36. (The

calculated case fragment throw distances in Tables C9.T35. and C9.T36. are for individual items. These throw distances do not consider "rogue" fragments that are produced by sections of nose plugs, base plates, or lugs, and they do not directly apply to stacks of munitions. In addition, shaped charge jets or slugs from directed energy munitions can travel significantly greater distances than case fragments; therefore, these munitions require specific analysis.)

C9.8.4.2.2.2.1. "Rogue" fragments can travel significantly greater distances (> 10,000 ft [3,048 m]) than those shown in Tables C9.T35. and C9.T36. Care must be taken either to properly orient the munition (e.g., lugs or strongbacks and nose or tail plate sections oriented away from personnel locations), or to minimize or eliminate the hazard of rogue fragments (e.g., sandbagging the munition prior to detonation).

C9.8.4.2.2.2.2. For multiple munitions' detonation, the preferred approach is:

C9.8.4.2.2.2.2.1. Place the munitions in a single layer with their sides touching such that their axis is horizontal.

C9.8.4.2.2.2.2.2. Place the munitions so that the nose of each munition is pointing in the same direction.

C9.8.4.2.2.2.2.3. Orient the munitions so that lugs or strongbacks and nose or tail plate sections are facing away from areas to be protected.

C9.8.4.2.2.2.2.4. Initiate the stack detonation so that all munitions detonate simultaneously.

C9.8.4.2.2.2.2.5. Use the following when the procedures outlined in subparagraphs C9.8.4.2.2.2.2.1. through C9.8.4.2.2.2.2.4. cannot be met:

C9.8.4.2.2.2.2.5.1. If the orientation of the potential rogue fragments can be controlled, then the ranges given in Tables C9.T35. and C9.T36. shall be increased by 20 percent to account for the interaction effects.

C9.8.4.2.2.2.2.5.2. If the orientation of potential rogue fragments cannot be controlled, fragment ranges must be evaluated on a case-by-case basis.

C9.8.4.2.2.2.2.5.3. If detonations involve stacks of mixed munitions, evaluate the distance for each munition separately using the procedures in subparagraph C9.8.4.2.2.2. and select the largest distance.

Table C9.T35. Default Maximum Case Fragment Distances for Intentional Detonations

DIAMETER (in) *[mm]*	**MAXIMUM FRAGMENT DISTANCE (feet)** *[m]*
<1.5	1250
<38	*381.0*
1.5	1266
38	*384.9*
2.0	1626
51	*497.1*
2.5	1905
64	*580.7*
3.0	2133
76	*649.3*
3.5	2326
89	*709.5*
4.0	2493
102	*761.4*
4.5	2641
114	*803.9*
5.0	2772
127	*845.0*
5.5	2892
140	*882.2*
6.0	3000
152	*913.6*
6.5	3101
165	*944.8*
7.0	3193
178	*973.8*
7.5	3400
190	*1033.8*
8.0	3593
203	*1094.3*
8.5	3775
216	*1151.0*
9.0	3946
229	*1204.4*
9.5	4108
241	*1251.1*
10.0	4262
254	*1299.1*

Table C9.T35. Default Maximum Case Fragment Distances for Intentional Detonations (continued)

DIAMETER (in) *[mm]*	**MAXIMUM FRAGMENT DISTANCE (feet)** *[m]*
10.5	4408
267	*1344.7*
11.0	4548
279	*1384.9*
11.5	4681
292	*1426.5*
12.0	4809
305	*1466.3*
12.5	4931
318	*1504.4*
13.0	5049
330	*1538.3*
13.5	5162
343	*1573.6*
14.0	5271
356	*1607.6*
14.5	5376
368	*1637.9*
15.0	5478
381	*1669.6*
15.5	5576
394	*1700.3*
16.0	5671
406	*1727.7*
16.5	5763
419	*1756.5*
17.0	5853
432	*1784.4*
17.5	5940
444	*1809.4*
18.0	6024
457	*1835.8*
18.5	6106
470	*1861.4*
19.0	6186
483	*1886.4*
19.5	6264
495	*1908.8*
20.0	6340
508	*1932.5*
> 20	Use equations in Notes 2 & 3
> 508	*Use equations in Notes 2 & 3*

Notes for Table C9.T35.:

1. These calculated fragment throw distances are for individual munitions and do not apply to stacks. They also do not address "rogue" (non-case) fragments that can be produced from sections of nose plugs, base plates, or lugs. Rogue fragments can travel to significantly greater distances (i.e., > 10,000 ft [3,048 m]) than those shown. Care must be taken to properly orient the munition or take other measures to minimize rogue fragment hazards.
2. Maximum Fragment Distance (MFD) in ft, Diameter in inches; ln is natural logarithm.
   MFD = 759 + 1251*[ln(Diameter) Diameter ≤ 7 in; [English EQN C9.T35-1]
   Diameter = exp[(MFD/1251) - 0.61]; Range ≤ 3193 ft; [English EQN C9.T35-2]
   MFD in m, Diameter mm ; ln is natural logarithm.
   MFD = -1002.08 + 381.305*[ln(Diameter)]; Diameter ≤ 178 mm; [Metric EQN C9.T35-3]
   Diameter = exp[(MFD/381.305) + 2.628]; Range ≤ 973.2 m; [Metric EQN C9.T35-4]
3. MFD in ft, Diameter in inches; ln is natural logarithm.
   MFD = -2641 + 2998*[ln(Diameter)]; Diameter > 7 in; [English EQN C9.T35-5]
   Diameter = exp[(MFD/2998) + 0.88]; Range > 3193 ft; [English EQN C9.T35-6]
   MFD in m, Diameter in mm; ln is natural logarithm.
   MFD = -3760.859 + 913.79*[ln(Diameter)]; Diameter > 178 mm; [Metric EQN C9.T35-7]
   Diameter = exp[(MFD/913.79) + 4.1157]; Range > 973.2 m; [Metric EQN C9.T35-8]
4. Use of equations given in Notes (2) and (3) to determine other Diameter/MFD combinations is allowed.
5. See subparagraph C9.8.4.2.2.2. for ranges associated with multiple munitions detonation.

Table C9.T36. Maximum Case Fragment Distances for Selected Single Item Detonations

MUNITION	MAXIMUM FRAGMENT THROW DISTANCE (CASE FRAGMENTS) (ft) *[m]*	MUNITION	MAXIMUM FRAGMENT THROW DISTANCE (CASE FRAGMENTS) (ft) *[m]*
20 mm projectile	320 *97.5*	M106, 8-in projectile	3290 *1002.8*
25 mm projectile	760 *231.6*	16"/50 projectile	5640 *1719.1*
37 mm projectile	980 *298.7*	M49A3, 60-mm mortar	1080 *329.2*
40 mm projectile	1100 *335.3*	M374, 81-mm mortar	1235 *376.4*
40 mm grenade	345 *105.2*	M3A1, 4.2 -in mortar	1620 *493.8*
M229, 2.75" rocket	1375 *419.1*	M64A1 500-lb bomb	2500 *762.0*
M48, 75-mm projectile	1700 *518.2*	MK 81, 250-lb bomb	2855 *870.2*
105-mm projectile	1940 *591.3*	MK 82, 500-lb bomb	3180 *969.3*
5"/38 projectile	2205 *672.1*	MK 83, 1000-lb bomb	3290 *1002.8*
5"/54 projectile	2307 *703.2*	MK 84, 2000-lb bomb	3880 *1182.6*
155-mm projectile	2580 *786.4*	BLU-109 bomb	4890 *1490.5*
M437, 175-mm projectile	2705 *824.5*		

Notes for Table C9.T36.:

1. These calculated case fragment throw distances are for individual items and do not apply to detonations involving multiple munitions. See subparagraph C9.8.4.2.2.2. for application to detonation of multiple munitions. In addition, shaped charge jets or slugs from directed energy munitions can travel significantly greater distances than case fragments; therefore, these munitions require specific analysis.
2. These calculated fragment throw distances are for individual munitions and do not apply to stacks. They also do not address "rogue" (non-case) fragments that can be produced from sections of nose plugs, base plates, or lugs. Rogue fragments can travel to significantly greater distances (i.e., > 10,000 ft [3,048 m]) than those shown. Care must be taken to properly orient the munition or take other measures to minimize rogue fragment hazards.

C9.8.4.3. EOD Operations

C9.8.4.3.1. EOD operational responses require the application of public withdrawal distances to all nonessential personnel per Table C8.T4.

C9.8.4.3.2. EOD operations or demonstrations conducted on ranges require minimum separation distances (see subparagraph C9.8.4.2.) for nonessential personnel.

C9.8.4.3.3. EOD training operations, or operations involving demolition of AE, do not require minimum separation distances for essential personnel. The onsite DoD authority shall determine adequate protection for essential personnel.

C9.8.4.3.4. EOD Proficiency Training Ranges. EOD proficiency-training ranges are limited to a maximum of 5 lbs [2.27 kg] of demolition explosives (e.g., bare charges or items without a fragment hazard).

C9.8.4.3.4.1. Facilities that require IBD, PTRD, and ILD protection must be located at the following minimum distances from the destruction point:

C9.8.4.3.4.1.1. If the destruction point is at least 500 ft [152.4 m] from these facilities, a 5-lb [2.27 kg] NEWQD limit applies.

C9.8.4.3.4.1.2. If the destruction point is less than 500 ft [152.4 m], but 300 ft [91.4 m] or more from these facilities, a 2.5-lb [1.13 kg] NEWQD limit applies.

C9.8.4.3.4.1.3. If the destruction point is less than 300 ft [91.4 m], but 200 ft [61 m] or more from these facilities, a 1.25-lb [0.57 kg] NEWQD limit applies.

C9.8.4.3.4.2. Barricading of Destruction Point. If the EOD Proficiency Training Range provides the 500-foot protection distance specified in subparagraph C9.8.4.3.4.1.1., then no barricading of the destruction point is required. If the EOD Proficiency Training Range provides less than 500 feet protection distance, then the range's destruction point shall be constructed to control ejection of debris by:

C9.8.4.3.4.2.1. Constructing a barricade with two entrances, which surrounds the destruction point, that is the equivalent of at least two side-to-side sandbags, is at least 6 ft [1.83 m] high, and is constructed within about 10 ft [3.05 m] of the destruction point.

C9.8.4.3.4.2.2. Locating the barricade entrances at 180 degrees separation. These entrances shall be barricaded, as above, to effectively block all debris.

C9.8.4.3.4.3. EOD proficiency training ranges used with other than bare charges or non-fragment producing items shall meet the requirements of subparagraph C9.8.4.1.

C9.8.4.3.4.4. EOD proficiency training ranges on which explosively operated tool kits are used on inert AE only require 100 ft [30.5 m] separation distance between the destruction point and facilities that require IBD, PTRD, and ILD protection. The site shall be barricaded per subparagraph C9.8.4.3.4.2.

C9.8.4.4. Live-fire Demonstrations and Disposal Operations. The appropriate DoD authority shall determine, on a case-by-case basis:

C9.8.4.4.1.1. Essential personnel required for the live-fire demonstrations or disposal operations.

C9.8.4.4.1.2. Other range safety considerations (e.g., personnel withdrawal distances and acceptable exposures).

C9.8.5. Inert Storage. The DoD Components shall determine acceptable locations for inert storage that is directly related to the explosives mission, and for inert storage that is not directly related but where control of and access to such inert storage is restricted only to personnel directly related to the explosives mission. The DoD Components shall determine what constitutes "directly related." The following apply to inert storage:

C9.8.5.1. Locations for inert storage shall be determined only after consideration of personnel exposure, the importance of the materiel in relation to the explosives mission, the operational conditions, and the availability of space.

C9.8.5.2. Site plans meeting the conditions above are not required to be submitted to the DDESB for review and approval (see paragraph C5.5.9.).

C9.8.5.3. Inert storage that will be accessed by personnel not related to the explosives mission shall be sited per subparagraphs C9.4.1.1.4.7. and C9.4.1.1.6.9. (based on blast only). Minimum fragment distances do not apply (see subparagraph C9.4.1.2.1.3.4.).

C9.8.6. Interchange Yards

C9.8.6.1. Truck, trailer, or railcar interchange yards are not subject to QD requirements, when used exclusively:

C9.8.6.1.1. For the interchange of vehicles or railcars containing AE between the commercial carrier and DoD activities.

C9.8.6.1.2. To conduct external inspection of the trucks, trailers, or railcars containing AE.

C9.8.6.1.3. To conduct visual inspection of the external condition of the cargo in vehicles (e.g., trucks, trailers, and railcars) that passed the external inspection.

C9.8.6.2. Truck, trailer, or railcar interchange used, at any time, for any purpose other than the above are subject to applicable Q-D tables. (See subparagraph C9.3.1.7.)

C9.8.7. Inter-DoD Component Support and Tactical Facilities

C9.8.7.1. General.

C9.8.7.1.1. The separation distances in subparagraph C9.8.7.2. shall apply between facilities of one DoD Component to those of another DoD Component regardless of the location of the boundaries.

C9.8.7.1.2. Other safety criteria (e.g., toxicity, noise, radiation, flight trajectory) may require greater distances. In these situations, the predominant hazard criteria shall apply.

C9.8.7.2. The following minimum QD relationships apply:

C9.8.7.2.1. AE storage facilities shall be separated by IMD.

C9.8.7.2.2. AE storage or operating locations of one DoD Component shall be separated from AE operating locations of another DoD Component by IBD. (See subparagraph C9.8.7.2.3. for an exception to this criterion.)

C9.8.7.2.3. Explosive operations that present a similar degree of hazard or involve joint or support operations shall be separated by ILD.

C9.8.7.2.4. AE storage or operating locations of one DoD Component shall be separated from AE tactical facilities of another DoD Component by IBD. For joint or support operations, determine the separation distance as though both facilities belonged to a single DoD Component.

C9.8.8. Detached Loading Docks. Detached loading docks that normally service multiple facilities shall be sited on the basis of use.

C9.8.8.1. When servicing magazines, they must be separated from magazines by IMD.

C9.8.8.2. When servicing operating buildings, they must be separated from the operating buildings by ILD.

C9.8.9. Holding Yards for Railcars and Trucks Containing AE

C9.8.9.1. Railcar groups containing AE shall be separated from each other by AGM distance in a railcar holding yard. For example:

C9.8.9.1.1. If the railcar holding yard is formed by two parallel ladder tracks connected by diagonal spurs, the parallel tracks and the diagonal spurs shall be separated by AGM distance for the quantities of AE involved.

C9.8.9.1.2. If the railcar holding yard is a “Christmas tree” arrangement, consisting of a ladder track with diagonal dead-end spurs projecting from each side at alternate intervals, the spurs shall be separated by AGM distance for the quantities of AE involved.

C9.8.9.2. Truck groups containing AE in holding yards shall be separated from each other by AGM distance.

C9.8.9.3. Both railcar and truck holding yards containing AE shall be separated from other facilities by the applicable IBD, PTRD, ILD, or IMD.

C9.8.9.4. In addition to the temporary parking of railcars, trucks, or trailers containing AE, holding yards may also be used to interchange truck, trailers, or railcars between the commercial carrier and the DoD activity, and also to conduct visual inspections.

C9.8.10. Inspection Stations for Railcars and Trucks Containing AE

C9.8.10.1. Inspection stations for railcars and trucks containing AE that are used exclusively for the activities below are not subject to QD criteria. However, these stations should be located as far as practical from other hazards or populated areas. Allowable activities are:

C9.8.10.1.1. External visual inspection of the railcars or motor vehicles.

C9.8.10.1.2. Visual inspection of the external condition of the cargo packaging in vehicles that have passed the external inspection indicated in subparagraph C9.8.10.1.1.

C9.8.10.1.3. Interchange of trucks, trailers, or railcars between the common carrier and the DoD activity.

C9.8.10.2. Inspection stations used for any other purpose shall comply with applicable QD criteria.

C9.8.11. Holding Areas for Suspect Railcars or Trucks Containing AE. Railcars or trucks that are suspected of being in a hazardous condition shall be separated (isolated) from other PES or ES by the applicable QD before any other action.

C9.8.12. AE Transportation Mode Change Locations. Movement and transfer of DoD-titled AE must comply with national, international, and host country-specific transportation regulations. QD criteria apply to all transfer operations involving DoD-titled AE.

C9.8.13. Secure Holding Area. An area designated for the temporary parking of commercial carriers' motor vehicles transporting DoD-owned Arms, Ammunition, and Explosives (AAE), classified (SECRET or CONFIDENTIAL) materials, and Controlled Cryptographic Items (CCI). There are two types of secure holding areas and the criteria for each are provided below. (Although the intent of such areas is to provide a secure storage location for commercial carriers while in transit, or during emergencies or other circumstances that are beyond a carrier's control, this Standard imposes no requirement for installations to have such areas. The term Secure Holding Area is applicable to areas (CONUS, Hawaii, Alaska, and Puerto Rico) governed by DoD 4500.9-R (Reference (aa)).)

C9.8.13.1. Secure Explosives Holding Area. Site as a holding yard per paragraph C9.8.9.

C9.8.13.2. Secure Non-explosives Holding Area. No siting required if located outside all QD arcs. If located within a QD arc, site as an administrative parking lot per subparagraph C9.4.1.1.4.6. The holding of HD 1.4S materials, without regard to QD, is permitted at this location.

C9.8.14. Storage Tanks for Hazardous Materials

C9.8.14.1. Unprotected, aboveground bulk storage tanks shall be separated from PES by IBD per Table C9.T1. A dike system satisfying Reference (s) is required. Aboveground storage tanks that are provided protection against rupture or collapse from blast and fragment hazards may be sited at distances less than Table C9.T1. when supported by testing or analysis.

C9.8.14.2. For installation of smaller bulk storage tanks, weigh the cost of distance or protective construction against the strategic value of the stored material, the ease of replacement in the event of an accident, and the potential environmental impact. Reduced distances may be approved if:

C9.8.14.2.1. The losses are accepted by the DoD Component.

C9.8.14.2.2. The tanks are sited.

C9.8.14.2.3. Spill containment is provided so other exposures are not endangered.

C9.8.14.3. Unprotected service tanks solely supporting AE storage or operating complexes that are supplied by a pipe system designed to resist blast and fragments may be sited at IBD based on blast only with a minimum distance of 400 ft [121.9 m] if:

C9.8.14.3.1. A dike system meeting the requirements of Reference (s) is provided.

C9.8.14.3.2. The DoD Component accepts the possible loss of the tanks and any collateral damage that a fire might cause as a result of the tanks being punctured by fragments.

C9.8.14.4. A service tank supporting a single PES shall be separated from that PES by the applicable NFPA fire protection distance. The distance from this service tank to any other PES shall be the larger of the required distance between the two PES or the applicable NFPA fire protection distance.

C9.8.14.5. Buried tanks and buried pipelines should be separated from all PES containing HD 1.2, HD 1.3, HD 1.4, or HD 1.6 AE by at least 80 ft [24.4 m]. The required separation distance for HD 1.1 or HD 1.5 AE is K3 [1.19] with a minimum of 80 ft [24.4 m]. If the PES is designed to contain the effects of an explosion, then no QD is required.

C9.8.14.6. Small quantities of POL or other hazardous materials used for operational purposes require no specific separation distance for explosives safety; however, operating procedures shall be implemented to limit adverse environmental impacts in the event of an accidental explosion.

C9.8.14.7. For underground AE facilities, it is not practical to specify QD criteria that cover all tank storage configurations. The DoD Component shall assess each configuration per section C9.7 to ensure that equivalent protection of subparagraphs C9.8.14.1. through C9.8.14.6. is provided.

C9.8.15. <u>Storage Tanks for Water</u>

C9.8.15.1. Unprotected aboveground water storage tanks shall meet the siting requirements of subparagraph C9.8.14.1. if loss of the tank is unacceptable to the DoD Component. Buried tanks and associated components of like value shall meet the siting requirements of subparagraph C9.8.14.5. Aboveground storage tanks that are provided protection against rupture or collapse from blast and fragment hazards may be sited at distances less than Table C9.T1. when supported by testing or analysis. No dike is required.

C9.8.15.2. QD criteria do not apply to water storage tanks and associated components if loss is acceptable to the DoD Component.

C9.8.16. Underground Tanks or Pipelines for Non-Hazardous Materials. See subparagraph C9.8.14.5.

C9.8.17. Temporary Construction or Maintenance Operations. Construction and maintenance personnel who are temporarily near a PES to perform their job shall be provided the maximum practicable protection from the effects of an explosion if one occurs at a PES. The DoD Component shall determine the minimum practicable separation distance from PES for such personnel and shall control operations at the PES to minimize personnel exposure to hazards from an explosion. Documentation of the rationale for the control measures taken shall be maintained until construction or maintenance operations are completed.

C9.8.18. Military Working Dog (MWD) Explosives Search Training. Training of MWD involves searches to detect explosives that have been hidden in various public places. These training operations typically include handling explosives, cutting or dividing explosive training aids, removing explosives from shipping and storage containers, and repackaging explosives into other containers. For these reasons, training operations shall:

C9.8.18.1. Be conducted by personnel meeting DoD Component qualifications.

C9.8.18.2. Be conducted in facilities that meet the requirements of this Standard.

C9.8.18.3. Store explosives in facilities that meet the requirements of this Standard.

C9.8.18.4. Provide non-essential personnel:

C9.8.18.4.1. $40W^{1/3}$ [$15.87Q^{1/3}$] separation distance from the training site if more than 15 lbs [6.8 kg] NEWQD are being used for the exercise.

C9.8.18.4.2. 100 ft [30.5 m] separation distance from the training site for NEWQD $\leq$ 15 lbs [6.8 kg].

C9.8.18.5. Minimize the number of samples and the quantity of explosives for each sample. The DoD Component shall determine the total quantity of explosives permitted during an exercise considering:

C9.8.18.5.1. The value and importance of the exposed facilities.

C9.8.18.5.2. The exercise operating conditions.

C9.8.18.5.3. The available separation distance for nonessential personnel.

C9.8.18.6. Separate samples a sufficient distance apart to prevent an explosion from propagating from one sample to another.

C9.8.18.7. Not use any initiating devices or initiating explosives.

C9.8.18.8. Not place explosives near any heat or spark producing items (e.g., bare electrical wiring, radiators, electric heaters, heating vents, etc.).

C9.8.18.9. Not place explosives in metal containers or other means of confinement that could produce fragments in the event of an accidental explosion.

C9.8.19. Demilitarization Processing Equipment and Operations for Expended .50-Caliber and Smaller Cartridge Casings

C9.8.19.1. A demilitarization operation for processing expended .50-caliber and smaller cartridge cases can be treated as a non-explosive operation provided:

C9.8.19.1.1. Cartridge casings to be processed are screened prior to processing. (Screening is intended to ensure that only .50-caliber and smaller are processed, and to remove unused .50-caliber and smaller cartridges.)

C9.8.19.1.2. Demilitarization processing equipment is tested to be capable of containing overpressure, fragment, and thermal hazards associated with a worst-case reaction involving a single live round of the most energetic cartridge that could be processed in the equipment.

C9.8.19.1.3. Demilitarization processing equipment is operated within the manufacturer's specifications and restricted only to the processing of expended .50-caliber and smaller cartridge casings.

C9.8.19.1.4. Demilitarization processing equipment is inspected and maintained to ensure safe operation.

C9.8.19.2. DoD Components shall:

C9.8.19.2.1. Approve the use of specific demilitarization processing equipment.

C9.8.19.2.2. Establish and implement procedures for:

C9.8.19.2.2.1. Screening and segregating the material to be processed.

C9.8.19.2.2.2. Operating, inspecting, and maintaining the demilitarization processing equipment to ensure safe operation.

C9.8.19.2.2.3. Dispositioning of processed material.

C9.8.19.3. Explosives Safety Siting

C9.8.19.3.1. Demilitarization processing operation locations meeting subparagraphs C9.8.19.1. and C9.8.19.2., and located outside of IBD from all PES, do not require submission of a site plan to the DDESB (see paragraph C5.5.10.).

C9.8.19.3.2. Locations used for demilitarization processing operations that are located within IBD arcs:

C9.8.19.3.2.1. Require submission of a site plan to the DDESB.

C9.8.19.3.2.2. Shall be sited at ILD, except from the PES to which it is integral.

C9.8.20. Conveyance Loading and Unloading at a Magazine. A conveyance (e.g., truck, trailer, railcar, ISO or Military Van (MILVAN) container) loading and unloading operation is permitted at a magazine without regard to QD between the magazine and the operation. "At a magazine" means loading and unloading operations at a loading dock attached to the magazine, or on the pad/apron in front of the magazine, or within the established boundaries of an aboveground magazine. Detached ramps or loading docks that normally service multiple facilities will be sited in accordance with paragraph C9.8.8.

C9.8.21. Reduced QD Magazines. The below criteria address the use of DDESB-approved reduced QD magazines (e.g., GOLAN 5, 10, and 15, NABCO SV-23 and SV-50, EOD magazine, Advanced EOD Magazine, and other similar magazines listed in Table AP1-4. of Reference (j)) for AE storage.

C9.8.21.1. Siting of Reduced QD Magazines

C9.8.21.1.1. Reduced QD magazines shall be sited as AGM, using the reduced QD distances established as part of the DDESB approval package for each type of magazine.

C9.8.21.1.2. A DDESB-approved site plan is required prior to the use of a reduced QD magazine for AE storage. However, when circumstances dictate, use of a magazine may proceed before DDESB approval provided the Service-level explosives safety office (i.e., USATCES, NOSSA, MARCORSYSCOM PM AMMO, or AFSC) has reviewed and approved the submission, the submission is at the DDESB for review and approval, and the DoD Component accepts that the DDESB approval process may impose different or additional requirements.

C9.8.21.1.3. Siting of reduced QD magazines shall comply with specific provisions for their use (e.g., venting, grounding) identified as part of the DDESB approval package for each type of magazine.

C9.8.21.1.4. The QD distances approved by the DDESB for reduced QD magazines do not account for the hazards presented to surrounding exposures when the magazine door is open or when authorized AE operations are conducted at the magazine. The following criteria are intended to minimize these hazards:

C9.8.21.1.4.1. The reduced QD magazine should be located and oriented to maximize protection of surrounding exposures. The selection of a location for the reduced QD magazine shall not be simply for convenience, but shall consider the direction of the door, planned operations, and the need to minimize exposure of personnel and facilities.

C9.8.21.1.4.2. The reduced QD magazine door should be directed away from occupied spaces and facilities, or at a minimum directed away from the highest exposures.

C9.8.21.1.4.3. For a reduced QD magazine authorized to contain up to 30 pounds [13.60 kg] NEWQD of HD 1.1, a minimum 50-foot [15.24 m] separation distance should be maintained from the door of the magazine, and from any authorized AE operation at the magazine, to the nearest occupied space or facility. For a reduced QD magazine authorized to contain 30 to 50 pounds [22.68 kg] NEWQD of HD 1.1, a minimum 100-foot [30.50 m] separation distance should be maintained from the door of the magazine, and from any authorized AE operation at the magazine, to the nearest occupied space or facility. At these separation distances, only minor damage to exposed facilities is expected as a result of blast overpressure; however, window breakage will likely occur and may present some risk to personnel in exposed facilities. Fragmentation hazards are not addressed by these separation distances. Barricades (see subparagraph C9.8.21.2.2.6.) may be used to stop low-angle, high-velocity fragments, which present the greatest threat to surrounding exposures.

C9.8.21.2. Authorized Operations at Reduced QD Magazines. Significant personnel exposure and risk reductions are obtained by the use of reduced QD magazines for AE storage, even when short-duration explosives operations are conducted at such magazines. Therefore, certain AE operations are authorized at a reduced QD magazine, without regard to QD. (NOTE: AE operations not authorized below require siting as an operating location.)

C9.8.21.2.1. The following AE operations may be conducted at reduced QD magazines without regard to QD, provided the requirements of subparagraph C9.8.21.2.2. are met: (The below criteria and guidance modify the criteria and guidance for AE operations identified as part of the DDESB approval package for each type of magazine.)

C9.8.21.2.1.1. The movement of packaged AE into and out of reduced QD magazines.

C9.8.21.2.1.2. The removal of internal packaged AE items from outer packaging (e.g., removal of individually packaged dog scent kit samples from their larger shipping container).

C9.8.21.2.1.3. The rotation and replacement of dynamite samples in dog scent kits, as required to meet DoD criteria.

C9.8.21.2.1.4. The issuance of security or reaction force AE for installation force protection, antiterrorism, or other similar mission.

C9.8.21.2.1.5. The removal and replacement of EOD materials contained in the large pumice containers in the Advanced EOD Magazine. (This is because the pumice containers are too large to transport in and out of the magazine.)

C9.8.21.2.1.6. The conduct of surveillance or inventory inspections that only involve a visual serviceability inspection of AE.

C9.8.21.2.1.7. The placement of Munitions and Explosives of Concern (MEC) that EOD personnel or Unexploded Ordnance (UXO)-qualified personnel have assessed and determined acceptable for movement and storage in an appropriate reduced QD magazine located at a Munitions Response Site (MRS).

C9.8.21.2.1.8. The conduct of other similar AE operations, provided:

C9.8.21.2.1.8.1. No direct energy is applied to the AE being handled (e.g., cutting, dividing, or crushing), except as allowed in subparagraph C9.8.21.2.1.9.

C9.8.21.2.1.8.2. The AE being handled have not been sensitized or made more sensitive to initiation (e.g., primed).

C9.8.21.2.1.8.3. The AE being handled are not in a configuration that makes them more susceptible to an unintentional detonation.

C9.8.21.2.1.9. The cutting of non-fragmenting AE (e.g., detonation cord, C4) designed to be cut using authorized cutting tools, provided all nonessential personnel are removed to a $40W^{1/3}$ [$15.87Q^{1/3}$] separation distance with a 100 ft [30.5 m] minimum.

C9.8.21.2.2. The following requirements apply to authorized AE operations at reduced QD magazines:

C9.8.21.2.2.1. The total NEWQD present (i.e., within the magazine and involved in the operation) shall not exceed the rated NEWQD of the reduced QD magazine.

C9.8.21.2.2.2. To minimize the size and effects of an unintentional detonation, operations conducted at reduced QD magazines shall be limited to the smallest MCE possible.

C9.8.21.2.2.3. AE operations should not be conducted inside reduced QD magazines unless absolutely necessary (as in the case of the Advanced EOD Magazine). Conducting AE operations inside a magazine increases the MCE and the directional effects of an internal explosion out the door.

C9.8.21.2.2.4. AE operations at reduced QD magazines should be conducted at times when the exposure of unrelated personnel is at a minimum (i.e., at night; before or after work shifts; on weekends).

C9.8.21.2.2.5. To take advantage of the barricade-type protection offered by the reduced QD magazine structure, AE operations outside of reduced QD magazines shall be conducted:

C9.8.21.2.2.5.1. As close to the base of the magazine as possible, with the magazine door closed and secured (not required if the magazine does not contain AE).

C9.8.21.2.2.5.2. On the side of the magazine that is oriented away from the surrounding area having the greatest exposure to be protected.

C9.8.21.2.2.6. Consideration should be given to constructing a barricade (to defeat high-velocity, low-angle fragments) for AE operations at reduced QD magazines. Acceptable barricading materials include sandbags and timber sand-filled walls; the barricade shall not generate additional debris hazards. The barricade must be at least 6 feet [1.83 m] high, provide line-of-sight protection between AE operations and exposures to be protected, and be the equivalent of two side-by-side sandbags.

C9.8.22. Criteria for Non-DoD Explosives Activities (AE Operations and Storage) on DoD Installations

C9.8.22.1. Non-DoD explosives activities shall only be conducted on DoD property per Table C9.T37. These non-DoD explosives activities must also comply with Bureau of Alcohol, Tobacco, and Firearms (BATF), Federal Aviation Administration (FAA), and other Federal, State, and local regulations. Definitions for the terminology used in Table C9.T37. can be found in the Glossary.

C9.8.22.2. For these types of non-DoD explosives activities, the Department of Defense shall be responsible for ensuring that IMD requirements only, as outlined in explosives site plan submissions, are met. DoD oversight of these non-DoD explosives activities is not intended.

C9.8.22.3. Non-DoD, explosives activities shall be evaluated based on IMD between multiple PES to ensure non-propagation. Where IMD is not met, then the NEW at each site not meeting IMD separation requirements shall be added together to determine the basis for the applicable IMD or IBD to use for separation of DoD sites.

C9.8.22.4. In Table C9.T37., “Check for IMD” means if IMD is not maintained between each PES, explosives quantities shall be totaled.

C9.8.22.5. IBD shall be determined based on this Standard.

C9.8.22.6. The DoD site approval for non-DoD, explosives activities is limited to the area encumbered by the IBD arcs.

C9.8.22.7. Review of building design, lightning protection, etc., is not necessary unless design features are used as justification to reduce the IBD arc.

Table C9.T37. Criteria for Non-DoD Explosives Activities on DoD Installations

To ➔ From ⬇	**Non-DoD Storage**	**DoD/Joint Storage**	**Non-DoD Operations**	**DoD Operations**	**Shared Launch Facilities**	**DoD Non-Explosives Facilities/Operations Non Related**
Non-DoD Storage	Check for IMD	IMD	Check for IMD	IBD	IBD	IBD
Non-DoD Operations	Check for IMD	IBD	Check for IMD	IBD	IBD	IBD
Shared Launch Facilities	IBD	IBD	IBD	IBD	ILD	IBD
DoD/Joint Storage	IMD	IMD	IBD	ILD	IBD	IBD
DoD Operations	IBD	ILD	IBD	ILD	IBD	IBD

C10. CHAPTER 10
CONTINGENCIES, COMBAT OPERATIONS, MILITARY OPERATIONS OTHER THAN WAR (MOOTW), AND ASSOCIATED TRAINING

C10.1. GENERAL

C10.1.1. This chapter provides the minimum criteria for contingencies, combat operations, military operations other than war (MOOTW), and associated training. Full compliance with other chapters of this Standard may not be possible during such operations. The DoD Components may establish implementing regulations that are more protective than this Standard. In situations involving combined or joint operations, the Commanders of the Combatant Commands or the U.S. Commander of a Joint Task Force (JTF) shall designate the DoD Component's explosives safety criteria to be used.

C10.1.2. The provisions of this chapter only apply to:

C10.1.2.1. Those DoD AE activities located outside the United States.

C10.1.2.2. The Commanders of the Combatant Commands, the U.S. Commanders of JTF, or the DoD Component Commanders in the management of these DoD AE activities. When necessary, commanders may delegate certain explosive safety responsibilities to designated subordinate commanders to ensure appropriate controls.

C10.1.2.3. Contingency, combat, and MOOTW training, regardless of location, when specifically authorized by applicable DoD Component headquarters or Combatant Commander. Prior to approval of this training, a risk analysis that thoroughly assesses asset preservation and identifies the risk associated with the training shall be conducted. QD separations provided for asset preservation shall be used for training, except where Chapter 9 permits lesser distances to be used.

C10.1.3. This chapter provides optional criteria and risk management tools not available elsewhere in this Standard. These optional criteria provide greater protection (asset preservation distance) for assets deemed sufficiently critical to warrant the greater protection, and, in some circumstances, provide lesser protection (minimum separation distance) for those assets for which the mission requirements outweigh the increased risk to those assets.

C10.1.3.1. Asset Preservation Distance. At this distance from the PES, assets at the ES are expected to be usable and mission capability is maintained following an incident. This separation distance should prevent propagation between PES. (See subparagraphs C2.2.5.5. and C2.2.5.6. for expected consequences for these separation distances.)

C10.1.3.2. Minimum Separation Distance. At this distance from the PES, mission capability will likely be impaired or delayed. This separation distance should prevent prompt propagation; however, late time propagation between PES is possible. (See subparagraphs C2.2.5.2., C2.2.5.3., and C2.2.5.4. for expected consequences for these separation distances.)

C10.2. RISK MANAGEMENT

Consistent with operational requirements, it is DoD policy to manage risks associated with AE (See section C1.2.). Exceptions to this chapter's criteria are where equivalent protection is provided or where a risk analysis is performed, as follows:

C10.2.1. Equivalent Protection. Analysis determining that protective construction or other specialized safety features provides a level of protection equivalent to the separation distances required by this Standard.

C10.2.2. Risk Analysis. Analysis determining that an acceptable level of safety is provided. Risk analysis is a systematic procedure consisting of the following four steps:

C10.2.2.1. An event analysis to identify and describe possible events such as the location, type of occurrence, probability of occurrence, and quantity of explosives.

C10.2.2.2. An effects analysis of the effects of the possible events to persons in the surroundings such as blast pressure, fragmentation, and thermal hazards.

C10.2.2.3. An exposure analysis of the places, protection and time history of exposed personnel in the hazardous areas.

C10.2.2.4. A risk calculation.

C10.2.3. Risk Management Control. The action a commander takes to minimize acceptable risk. Such actions shall include:

C10.2.3.1. Development, implementation, and enforcement of applicable control measures used to eliminate the hazard or reduce its risk.

C10.2.3.2. Continuous evaluation of the effectiveness of the implemented control measures.

C10.3. SITE PLAN PROCESS

C10.3.1. Site Approval. All explosives locations falling within the scope of this Chapter shall be approved by the applicable commander or by the DDESB as outlined below. Site plan packages shall be submitted:

C10.3.1.1. For AE locations such as the following:

C10.3.1.1.1. Storage Locations.

C10.3.1.1.2. Holding areas (e.g., Basic Load Ammunition Holding Areas (BLAHA), flight line holding areas, port and railhead holding areas, and marshalling areas).

C10.3.1.1.3. Handling and operating locations (e.g., HAS, ports, AE maintenance, repair, and renovation areas and sling-out areas).

C10.3.1.1.4. Forward Arming and Refueling Points (FARP).

C10.3.1.1.5. Combat Aircraft Parking Area (CAPA) and cargo aircraft parking areas.

C10.3.1.1.6. Static missile batteries.

C10.3.1.1.7. Locations used for the treatment or disposal (e.g., open burn or open detonation) of munitions. Exceptions are those locations used in an emergency response, for burning excess propellant resulting from munitions use during training, and those involved in direct combat operations.

C10.3.1.2. Non-AE related ES within QD arcs.

C10.3.2. Documentation requirements. The operational situation and the type and duration of the AE operations conducted at the site or facility determine the type of documentation required for a site approval. The following categories of operations apply:

C10.3.2.1. Permanent.

C10.3.2.1.1. Definition. Those AE-related facilities where operations are expected to continue for more than 12 months.

C10.3.2.1.2. Documentation Requirement. A DDESB-approved site plan for such locations must be obtained once the Commander of the Combatant Commands or DoD Component headquarters, as applicable, determines operations shall require the facilities' use to continue beyond 12 months.

C10.3.2.2 Recurrent

C10.3.2.2.1. Definition. Those AE-related facilities where operations are expected to occur on a periodic basis regardless of the duration of the operation. These locations may be sited using compensatory actions, such as facility evacuation or change-of-use, to minimize the risks associated with AE operations.

C10.3.2.2.2. Documentation Requirement. These locations must have a DDESB-(or appropriate level of command when applicable) approved site plan before commencing operations.

C10.3.2.3. Temporary

C10.3.2.3.1. Definition. Those AE-related facilities where operations are not expected to continue for more than 12 months and are not recurrent, or for which advanced planning and approval are impractical.

C10.3.2.3.2. Documentation Requirement. A plan for the specific scenario shall be approved by the applicable commander. The plan shall include the following:

C10.3.2.3.2.1. A risk assessment for the proposed operation. This assessment shall weigh the need for the facility against the potential effects of an accident (e.g., mission impact, loss of resources, turnaround times).

C10.3.2.3.2.2. Schedule for the cessation of explosives operations or submittal of a site plan if the operations exceed 12 months.

C10.3.2.4. Contingency, Combat, and MOOTW Training

C10.3.2.4.1. Definition. Those operations that simulate real world combat environments using live AE to achieve training goals.

C10.3.2.4.2. Documentation Requirement. Facilities or areas for training activities shall have a DDESB-approved site plan for permanent or recurrent operations, or a risk analysis approved by the applicable commander for temporary operations.

C10.3.3. Site Plan Packages. See section C5.4. for the requirements with the following additions:

C10.3.3.1. In the absence of suitable maps or drawings, information (e.g., sketches, photographs, or other information) may be provided.

C10.3.3.2. An explanation of any deviations from pertinent safety standards caused by local conditions.

C10.3.3.3. A copy of the risk analysis performed by the DoD Component, if one was performed, to demonstrate equivalent protection.

C10.3.4. Approval Authority for Waivers and Exemptions. The Commander of the Combatant Commands, the U.S. Commander of JTF, or the DoD Component Commander may, for strategic and other compelling reasons, authorize waivers to the explosives safety standards contained herein for the planning or conduct of contingencies, combat operations and MOOTW. All waivers shall be coordinated with the host nation, as required, and consistent with international agreements.

C10.3.4.1. Requests for waivers and exemptions to QD criteria shall be IAW DoD Component directives. When joint operations are being conducted from a single base or location, waivers and exemptions that affect another DoD Component must be coordinated between affected DoD Components.

C10.3.4.2. Requests for waivers and exemptions to QD criteria shall contain the following:

C10.3.4.2.1. A risk analysis for the proposed operation weighing the need to conduct the operation and violate the standards against the potential effect of an accident (e.g., mission impact, loss of resources, turnaround times).

C10.3.4.2.2. A timeline listing milestones which shall eliminate the need for the waiver or exemption.

C10.4. QD CRITERIA FOR CONTINGENCIES, COMBAT OPERATIONS, MOOTW AND ASSOCIATED TRAINING

QD criteria are provided for specific types of locations below:

C10.4.1. BLAHA

C10.4.1.1. General. To fulfill their missions, certain units must keep their basic load ammunition in armored vehicles, trucks, trailers, structures, or on pads. This involves acceptance of greater risks to unit personnel, facilities, and equipment than permitted by other chapters of this Standard. The concept of BLAHA storage may also be used to provide QD separations during mobile operations. A Basic Load Storage Area (BLSA) is a location containing multiple BLAHA.

C10.4.1.2. Mixing of Basic Load Ammunition. Storage compatibility requirements of Chapter 3 do not apply to BLAHA facilities.

C10.4.1.2.1. NEWQD for use with BLAHA QD criteria shall be determined as follows:

C10.4.1.2.1.1. The sum of the weights of all energetic compositions contained in munitions hazard classified as HD 1.1 or 1.5 shall be used.

C10.4.1.2.1.2. The sum of the explosive weight of all HD 1.2 AE shall be used. The propellant weight of a HD 1.2 item (if present) may be disregarded.

C10.4.1.2.1.3. The weights of energetic compositions hazard classified as HD 1.3 may be disregarded. However, if the site only contains HD 1.3 items, the criteria contained in paragraph C9.4.3. apply.

C10.4.1.2.1.4. The weights of energetic compositions classified as HD1.4 may be disregarded.

C10.4.1.2.1.5. The explosive weight of HD 1.6 shall be computed as follows:

C10.4.1.2.1.5.1. When HD 1.6 is stored alone or with HD 1.4 AE, the QD criteria of paragraph C9.4.3. apply.

C10.4.1.2.1.5.2. When HD 1.6 is stored with AE classified as HD 1.1, HD 1.2, or HD 1.5, add the explosives weight of the HD 1.6 items into the NEWQD calculations.

C10.4.1.2.1.5.3. When HD 1.6 is stored with AE classified as HD 1.3 add the explosives weights of HD1.3 and HD 1.6. The QD criteria in paragraph C9.4.3. apply.

C10.4.1.2.2. Explosives Limits

C10.4.1.2.2.1. The maximum NEWQD at any BLAHA in a BLSA storing mixed compatibility must not exceed 8,818 lbs [4,000 kg]. A BLSA may have multiple 8,818-lb [4,000 kg] BLAHA, provided the BLAHA are separated from each other by the applicable distances (D1, D2 and D3) given in Table C10.T1.

C10.4.1.2.2.2. When the NEWQD of a BLSA or a BLAHA exceeds 8,818 lbs [4,000 kg], the QD computations and HD mixing rules for the site shall be IAW Chapter 9 and the explosives compatibility storage criteria shall be IAW Chapter 3.

C10.4.1.2.3. QD Computations

C10.4.1.2.3.1. The total NEWQD of AE in each site shall be used for computation of QD provided the required distances (Table C10.T1.) necessary to prevent propagation separate these sites. If the separation distances are not met, the entire BLSA shall be considered one site and subparagraph C10.4.1.2.2.2. applies.

C10.4.1.2.3.2. The IMD requirements of Chapter 9 apply when using 3-Bar or 7-Bar ECM.

C10.4.1.2.3.3. Table C10.T1. contains the QD separation for BLAHA and BLSA.

C10.4.1.2.3.4. Heavy armored vehicles are expected to contain most of the blast and fragments from an internal explosion and are well protected from an external explosion. For this reason there is no required separation from heavy armor PES to light or non-armored ES. Additionally, heavy armor ES require no separation from other sites. The hatches of heavy armored vehicles must be kept closed to be considered as heavy armor vehicles; otherwise, they are considered as light armor vehicles. Use Table C10.T2. to determine the applicable QD for heavy, light and non-armored vehicles.

Table C10.T1. QD for BLAHA and BLSA

NEW (lbs) [kg]	D1[1] (ft) [m]	D2[2] (ft) [m]	D3[3] (ft) [m]	D4[4] (ft) [m]	D5[5] (ft) [m]	D6[6] (ft) [m]
10	4	13	26	591	886	66
4.5	*1.3*	*3.9*	*7.9*	*180*	*270*	*20*
15	5	15	30	591	886	66
6.8	*1.5*	*4.5*	*9.0*	*180*	*270*	*20*
20	5	16	33	591	886	66
9.1	*1.7*	*5.0*	*9.9*	*180*	*270*	*20*
30	6	19	37	591	886	66
13.6	*1.9*	*5.7*	*11.4*	*180*	*270*	*20*
50	7	22	44	591	886	66
22.7	*2.2*	*6.7*	*13.5*	*180*	*270*	*20*
70	8	25	49	591	886	66
31.8	*2.5*	*7.5*	*15.1*	*180*	*270*	*20*
100	9	28	56	591	886	66
45.4	*2.8*	*8.5*	*17.0*	*180*	*270*	*20*
150	11	32	64	591	886	81
68.0	*3.2*	*9.7*	*19.4*	*180*	*270*	*24.6*
200	12	35	70	591	886	99
90.7	*3.6*	*10.7*	*21.4*	*180*	*270*	*30.0*
300	13	40	80	591	886	130
136.1	*4.1*	*12.2*	*24.5*	*180*	*270*	*39.6*
500	16	48	95	591	886	
226.8	*4.8*	*14.5*	*29.0*	*180*	*270*	
700	18	53	107	591	886	
317.5	*5.4*	*16.2*	*32.5*	*180*	*270*	
1,000	20	60	120	591	886	
453.6	*6.1*	*18.3*	*36.6*	*180*	*270*	
1,500	23	69	137	591	886	
680.4	*7.0*	*20.9*	*41.9*	*180*	*270*	
2,000	25	76	151	591	886	
907.2	*7.7*	*23.0*	*46.1*	*180*	*270*	
3,000	29	87	173	591	886	
1,360.8	*8.8*	*26.4*	*52.8*	*180*	*270*	
5,000	34	103	205	591	886	
2,268.0	*10.4*	*31.3*	*62.5*	*180*	*270*	
7,000	38	115	230	669	1021	
3,175.1	*11.7*	*35.0*	*70.0*	*204.0*	*306.0*	
8,818	41	124	248	751	1146	
4,000	*12.6*	*37.8*	*75.6*	*229.0*	*343.4*	

Notes for Table C10.T1.:

1. D1 is used for:
   a. Side-to-side, side-to-rear and rear-to-rear exposures between Undefined ECM, provided the earth cover complies with subparagraph C5.2.1.3. and the explosives are stored at least 3 ft [1 m] from the end of the ECM.
   b. Non-armored vehicle (PES) to non-armored vehicle (ES) when an adequate barricade IAW section C5.3. is located between them.

c. Light armored vehicle (PES) to non-armored vehicle (ES) when an adequate barricade IAW section C5.3. is located between them.

d. Light armor or non-armored vehicle (PES) to light armored vehicle (ES) when an adequate barricade IAW section C5.3. is located between them.

e. Determining D1 and NEWQD for D1 (NEWQD in lbs, D1 in ft):

$D1 = 2*NEWQD^{1/3}$ [English EQN C10.T1-1]

$NEWQD = (D1/2)^3$ (8,818 lbs maximum) [English EQN C10.T1-2]

f. Determining D1 and NEWQD for D1 (NEWQD in kg, D1 in m)

$D1 = 0.79 * NEWQD^{1/3}$ [Metric EQN C10.T1-3]

$NEWQD = (D1/0.79)^3$ (4,000 kg maximum) [Metric EQN C10.T1-4]

2. D2 is used for:

a. Front-to-front exposures involving Undefined ECM when there is an adequate barricade (section C5.3.) at the ES.

b. Non-armored or light armored vehicles to the side or rear of an Undefined ECM.

c. Determining D2 and NEWQD for D2 (NEWQD in lbs, D2 in ft):

$D2 = 6*NEWQD^{1/3}$ [English EQN C10.T1-5]

$NEWQD = (D2/6)^3$ (8,818 lbs maximum) [English EQN C10.T1-6]

d. Determining D2 and NEWQD for D2 (NEWQD in kg, D2 in m)

$D2 = 2.38 * NEWQD^{1/3}$ [Metric EQN C10.T1-7]

$NEWQD = (D2/2.38)^3$ (4,000 kg maximum) [Metric EQN C10.T1-8]

3. D3 is used for:

a. Non-armored vehicles to non-armored vehicles without an adequate barricade.

b. Light armored vehicles to non-armored vehicles without an adequate barricade at the non-armored vehicles.

c. Undefined ECM to Undefined ECM when positioned front-to-front and no barricade is present.

d. Non-armored vehicles, light armored vehicles or Undefined ECM to the front of Undefined ECM when no barricade is present at the ES.

e. Determining D3 and NEWQD for D3 (NEWQD in lbs, D3 in ft):

$D3 = 12*NEWQD^{1/3}$ [English EQN C10.T1-9]

$NEWQD = (D3/12)^3$ (8,818 lbs maximum) [English EQN C10.T1-10]

f. Determining D3 and NEWQD for D3 (NEWQD in kg, D3 in m)

$D3 = 4.76 * NEWQD^{1/3}$ [Metric EQN C10.T1-11]

$NEWQD = (D3/2.38)^3$ (4,000 kg maximum) [Metric EQN C10.T1-12]

4. D4 is used for PTRD from non-armored and light armored vehicles.

a. Determining D4 and NEWQD for D4 (NEWQD in lbs, D4 in ft):

$NEWQD \leq 5{,}500$ lbs D4 = 591 ft.

5,500 lbs < $NEWQD \leq 8818$ lbs $D4 = 8*NEWQD^{1/2}$ [English EQN C10.T1-13]

D4 < 591 ft NEWQD = 0 lbs

591 ft $\leq D4 \leq$ 751 ft $NEWQD = (D4/8)^2$ (8,818 lbs maximum) [English EQN C10.T1-14]

b. Determining D4 and NEWQD for D4 (NEWQD in kg, D4 in m)

$NEWQD \leq 2{,}495$ kg D4 = 180 m

2,495 kg < $NEWQD \leq 4000$ KG $D4 = 3.62 * NEWQD^{1/2}$ [Metric EQN C10.T1-15]

D4 < 180 m NEWQD = 0 kg

180 m $\leq D4 \leq$ 229 m $NEWQD = (D4/3.62)^2$ (4,000 kg maximum) [English EQN C10.T1-16]

5. D5 is the IBD from non-armored and light armored vehicles.

a. Determining D5 and NEWQD for D5 (NEWQD in lbs, D5 in ft):

$NEWQD \leq 5{,}500$ lbs D5 = 886 ft.

5,500 lbs < $NEWQD \leq 8818$ lbs $D5 = 12.2*NEWQD^{1/2}$ [English EQN C10.T1-17]

D5 < 886 ft NEWQD = 0 lbs

886 ft $\leq D5 \leq$ 1146 ft $NEWQD = (D5/12.2)^2$ (8,818 lbs maximum) [English EQN C10.T1-18]

b. Determining D5 and NEWQD for D5 (NEWQD in kg, D5 in m)

$NEWQD \leq 2{,}495$ kg D5 = 270 m

2,495 kg < $NEWQD \leq 4000$ KG $D5 = 5.43 * NEWQD^{1/2}$ [Metric EQN C10.T1-19]

D5 < 270 m NEWQD = 0 kg

270 m $\leq$ D5 $\leq$ 343.4 m NEWQD = $(D5/5.43)^2$ (4,000 kg maximum) [Metric EQN C10.T1-20]

6. D6 is used to determine the IBD and PTRD from heavy armor vehicles. When NEWQD exceeds 331 lb [150 kg] the IBD and PTRD specified in Chapter 9 apply.
   a. Determining D6 and NEWQD for D6 (NEWQD in lbs, D6 in ft):

NEWQD $\leq$ 110 lbs	D6 = 66 ft
110 lbs < NEWQD $\leq$ 331 lbs	$D6 = -4.49 + 0.487*(NEWQD^{1/3}) + 2.928*(NEWQD^{1/3})^2$ [English EQN C10.T1-21]
D6 < 66 ft	NEWQD = 0 lbs
66 ft $\leq$ D6 $\leq$ 138 ft	$NEWQD = (0.0833 + [1.5421 + 0.3416*D6]^{1/2})^3$ [English EQN C10.T1-22]

   b. Determining D6 and NEWQD for D6 (NEWQD in kg, D6 in m)

NEWQD < 50 kg	D6 = 20 m
50 $\leq$ NEWQD $\leq$ 150 kg	$D6 = -1.37 + 0.193*(NEWQD^{1/3}) + 1.512*(NEWQD^{1/3})^2$ [Metric EQN C10.T1-23]
D4 < 20 m	NEWQD = 0 kg
20 m $\leq$ NEWQD $\leq$ 42.3 m	$NEWDQ = (0.0640 + [0.9108 + 0.6615*D6]^{1/2})^3$ [Metric EQN C10.T1-24]

Table C10.T2. QD Requirements for Armored Vehicles [1]

TO ES	EXPOSURE	FROM PES		
		HEAVY	LIGHT	NON-ARMORED
HEAVY	IMD	N/R	N/R	N/R
LIGHT	IMD	N/R	D1 from C10.T1	D1 from C10.T1
NON-ARMORED	IMD	N/R	D3 from C10.T1	D3 from C10.T1
	IBD	D6 from C10.T1	D5 from C10.T1	D5 from C10.T1
	PTRD	D6 from C10.T1	D4 from C10.T1	D4 from C10.T1

Notes for Table C10.T2.:

1. Application of D1 and D2 distances above may require the use of a barricade between PES and ES. Refer to Table C10.T1. notes regarding the need for a barricade.
2. N/R = IMD Not Required (N/R)
3. Use d =$24W^{1/3}$ [9.52 $W^{1/3}$] [English EQN C10.T2-1] [Metric EQN C10.T2-2] or d=$30W^{1/3}$ [11.90 $W^{1/3}$] [English EQN C10.T2-3] [Metric EQN C10.T2-4] instead of D1 and D3 for asset preservation.

C10.4.2. Ports. The following criteria shall apply to ports where DoD AE are loaded or unloaded.

C10.4.2.1. Explosives Piers

C10.4.2.1.1. AGM IMD (K11[4.36]) shall be maintained between explosives piers.

C10.4.2.1.2. ILD (K18 [7.14]) shall be maintained from an explosives pier to a non-explosives pier used for the handling of military cargo.

C10.4.2.1.3. AGM IMD (K11 [4.36]) shall be maintained to AE holding areas based on the NEWQD at the pier.

C10.4.2.1.4. Marshalling Yards shall be located at PTRD from explosives piers.

C10.4.2.1.5. Railheads used for long-term storage or as a transfer depot shall be sited at AGM IMD (K11 [4.36]) from an explosives pier based on the NEWQD at the pier.

C10.4.2.2. Explosives anchorages. The criteria of Chapter 9 apply with the following exceptions:

C10.4.2.2.1. ILD (K18 [7.14]) shall be provided between the explosives loading or unloading section of the anchorage and the loaded ship section of the explosives anchorage (see Figure C9.F10.).

C10.4.2.2.2. An explosives anchorage shall be located at K40 [15.87] from all piers. However, where necessary for security or navigational reasons, this distance may be reduced to ILD (K18 [7.14]) when the piers are only used for DoD operations. PTRD may be applied for asset preservation. A separation distance of K40 [15.87] shall be maintained to all non-DoD related piers.

C10.4.2.2.3. ILD (K18 [7.14]) is permitted between an explosives anchorage and a non-explosives DoD-related anchorage. K40 [15.87] shall be maintained between an explosives anchorage and a non-explosives, non-DoD related anchorage.

C10.4.2.3. AE Facilities

C10.4.2.3.1. AE Holding Areas. These holding areas are used in support of AE loading and unloading of ships. Typically, AE being held at these locations are only present for a short time. The NEWQD associated with the AE holding area shall be based on all AE present at the site. The following apply to AE holding areas:

C10.4.2.3.1.1. ILD (K18 [7.14]) shall be maintained to both explosives and non-explosives piers based on the NEWQD present at the AE holding areas.

C10.4.2.3.1.2. PTRD shall be maintained to an explosives or non-explosives Marshalling Yard.

C10.4.2.3.1.3. Railheads used for AE holding areas storage or as a transfer depot shall be sited at AGM IMD (K11 [4.36]) from an AE holding areas based on the NEWQD at the AE holding areas.

C10.4.2.3.2. Marshalling Yards. PTRD shall be maintained between marshalling yards and explosives piers or AE holding areas. The location of the marshalling yard will typically be governed by the NEWQD at the other PES. When operational necessity dictates, marshalling yards may be separated by ILD (K18 [7.14]) to any nearby manned explosives operations and AGM IMD (K11 [4.36]) to any nearby unmanned explosives storage operations.

C10.4.2.3.3. Loading Docks. Loading docks shall be sited at IMD (K11 [4.36]) from all ES.

C10.4.2.3.4. Classification Yards. Use criteria provided in paragraph C9.8.2.

C10.4.2.3.5. Railheads. Based on its use, a railhead shall be sited as a classification yard, AE holding area, or a loading dock.

C10.4.3. Field Storage and Handling Areas. These areas shall be sited IAW Table C10.T3. Use separation distances from the applicable QD tables in Chapter 9 for the HD and NEWQD of the AE involved with the PES. AE will be segregated IAW Chapter 3 by storage CG. The clear zone surrounding the field storage and handling areas is bounded by the applicable IBD. No unrelated, occupied structures are permitted within this zone.

C10.4.3.1. These areas may consist of all or some of the following explosives locations:

C10.4.3.1.1. Field Storage Sections. These sections are used to store AE. Field storage sections are used for dispersing AE in multiple, widely-separated storage sections; this arrangement protects the loss of other sections from the loss of any one section, which would seriously degrade the mission. AE may be stored in existing structures, caves, and tunnels as prescribed in Chapter 9. The construction and use of barricades and revetments shall be IAW Chapter 5.

C10.4.3.1.2. AE Staging Area. These areas are normally used for temporary holding of outgoing AE and for ready access to Combat Aircraft Loading Areas (CALA).

C10.4.3.1.3. Captured Enemy Ammunition Area. A separate area shall be provided for the storage of captured enemy AE. Captured enemy AE that cannot be identified shall be treated as HD 1.1.

C10.4.3.1.4. AE Operations Area. An area used for operations such as minor maintenance and repair of AE or their containers, surveillance, segregation, or weapons assembly.

C10.4.3.1.5. AE Destruction Area. An area used for disposal of AE. It may consist of a burning area, a demolition area, or both.

C10.4.3.1.6. Sling-out Area. An area used for moving AE by rotary-wing aircraft.

C10.4.3.2. These areas may consist of all or some of the following non-explosives locations:

C10.4.3.2.1. Administration and Billeting Areas. Inhabited locations not directly related to the daily operations of the field storage and handling areas.

C10.4.3.2.2. Manned Support Facilities. Facilities directly supporting AE operations (e.g., field offices and AE support equipment maintenance facilities).

C10.4.3.2.3. Unmanned Support Facilities. Unmanned locations supporting AE operations (e.g., forklift charging stations, dunnage storage, and buildings that store inert materials). A minimum 50 ft [15.2 m] separation distance shall be maintained from these locations to any PES.

C10.4.3.3. Modular Storage. A barricaded area comprised of a series of connected cells with hard surface storage pads separated from each other by barricades (see paragraph C5.2.2.).

C10.4.3.4. Commercial Intermodal Containers (CIC). Containers used for transporting AE may be used for AE storage and shall be sited as AGM.

Table C10.T3. QD for Field Storage and Handling Areas

	FROM					
TO	**Storage Sections**	**AE Staging Area**	**Captured Enemy Ammunition Area**	**AE Operations Area**	**Sling Out Area Area**	**AE Destruction Area**
Storage Sections	IMD Note 1	IMD Note 1	PTRD[2] PTRD[2]	IMD Note 1	IMD Note 1	Note 4
AE Staging Area	IMD Note 1	IMD Note 1	PTRD[2] PTRD[2]	IMD Note 1	IMD Note 1	Note 4
Captured Enemy Ammunition Area	IMD Note 1	IMD Note 1	IMD PTRD[2]	IMD Note 1	IMD Note 1	Note 4
AE Operations Area	IMD Note 1	IMD Note 1	PTRD[2] PTRD[2]	IMD Note 1	IMD Note 1	Note 4
Sling-Out Area	N/R Note 1	N/R Note 1	PTRD[2] PTRD[2]	IMD Note 1	IMD Note 1	Note 4
Administrative and Billeting Area	IBD[3] IBD[3]	IBD[3] IBD[3]	IBD[3] IBD[3]	IBD[3] IBD[3]	IBD[3] IBD[3]	Note 4
Boundaries	IBD[3] IBD[3]	IBD[3] IBD[3]	IBD[3] IBD[3]	IBD[3] IBD[3]	IBD[3] IBD[3]	Note 4
Manned Non-Explosive Support Facility	ILD Note 1	ILD Note 1	IBD[3] IBD[3]	ILD Note 1	ILD Note 1	Note 4
Unmanned Non-Explosive Support Facility	N/R Note 1	N/R Note 1	PTRD[2] PTRD[2]	N/R Note 1	N/R Note 1	Note 4
AE Destruction Area	Note 4	Note 4	Note 4	Note 4	Note 4	Note 4

Notes for Table C10.T3.:

N/R = Not Required

1. The distance criteria in the upper half of each row are the minimum separation distances required per Chapter 9. The distance criterion in the lower half of each row is the asset preservation distance. For HD 1.1 material, use $d = 24W^{1/3}$ [$9.52\ W^{1/3}$] [English EQN C10.T3-1] [Metric EQN C10.T3-2] or $d = 30W^{1/3}$ [$11.90\ W^{1/3}$] [English EQN C10.T3-3] [Metric EQN C10.T3-4]. For HD 1.2, 1.3, or 1.4 apply PTRD from Chapter 9.
2. PTRD includes minimum fragment distance.
3. IBD includes minimum fragment distance.
4. IAW paragraphs C9.8.3. and C9.8.4.

C10.4.4. FARP. Storing AE and fuel at the same location is inherently hazardous and should be avoided when possible. If it is necessary to refuel and rearm aircraft at the same location, all precautions must be made to minimize the hazards involved in these operations. Armament pads shall contain the minimum amount of AE to conduct efficient operations. For example, where armament pads support only one aircraft, that pad shall be restricted to the amount of ammunition necessary to rearm that aircraft.

C10.4.4.1. Required Separations

C10.4.4.1.1. Use K24 [9.52] for asset preservation between FARP and other ES.

C10.4.4.1.2. FARP shall be separated by IBD from all non-associated inhabited buildings.

C10.4.4.1.3. AE-ready storage (i.e., AE staged to support the next load) shall be separated by AGM IMD from the armament pads with only armament pads considered as the PES. Ready AE storage structures and locations shall be separated from other ready AE storage structures and locations by AGM IMD.

C10.4.4.1.4. Build-up locations shall be separated by AGM IMD from all other explosives storage and operations with only the build-up locations considered as the PES.

C10.4.4.1.5. Distances prescribed by the owning DoD Component shall separate other support structures and sites.

C10.4.4.1.6. AE shall be separated from operational fuel supplies by at least 100 ft [30.5 m]. Fuel supplies shall be diked or placed downhill from AE.

C10.4.5. Airfield Operations. Special consideration must be given to phased plans where the peacetime operation and positioning of aircraft transitions to contingency operations with increased quantities and use of AE. Exposures given adequate protection under the peacetime phase may be at greater risk during the contingency phase. Commanders must consider these changes when approving these plans. The proper use of such features as barricades or earth-filled, steel-bin-type barricades (ARMCO revetment or equivalent (see section C5.3.)) can decrease the magnitude of a potential event and increase the explosives capacity of limited areas.

C10.4.5.1. Airfield QD Criteria for PES. Table C10.T4. provides criteria for airfield PES.

C10.4.5.2. Airfield QD Criteria for ES

C10.4.5.2.1. Runways, Taxiways and Aircraft

C10.4.5.2.1.1. For military use only, use Table C10.T4.

C10.4.5.2.1.2. For joint use, use criteria in Table C9.T24.

C10.4.5.2.2. Combat Aircraft Support Facilities

C10.4.5.2.2.1. Unhardened combat aircraft support facilities shall be separated from AE storage and operating facilities by K30 [11.9]. For asset preservation, apply incremental K40 [15.87] to K50 [19.84] based on the NEWQD.

C10.4.5.2.2.2. If these functions are located in a HAS, separation may be reduced to K18 [7.14] to the sides or rear of the HAS.

C10.4.5.2.2.3. Other hardened facility sitings require DDESB approval.

C10.4.5.2.2.4. When operational necessity dictates, separation distances less than K18 [7.14] may be approved for ES; however, it must be demonstrated that protection equivalent to K18 [7.14] is being provided.

C10.4.6. Static Missile Battery Separation. To ensure optimal effectiveness, offensive and defensive missile batteries many times must be deployed in a static (non-mobile role) in the proximity of other AE operations such as field storage or flight lines. The following criteria apply to deployed static missile batteries and associated support functions:

C10.4.6.1. IMD (K11 [4.36]) shall be maintained between missile launchers, reloads and other AE storage locations to include parked AE-loaded aircraft.

C10.4.6.2. Missile batteries deployed within the IBD of AE storage areas may be sited at K18 [7.14] to manned functions considered related to area AE operations. Likewise, missile batteries deployed in the clear zones of flight line operations may be sited at K18 [7.14] to manned flight line facilities.

C10.4.6.3. Those functions solely providing support to static missile units, such as motor pools, may be sited at K18 [7.14] to batteries and other AE activities when the missile battery is located in these areas. For asset preservation, use PTRD.

C10.4.6.4. No separation is required between missile batteries and the security force structures exclusively supporting them.

C10.4.7. Emergency Destruction. When it becomes necessary to destroy stores of AE to prevent them from falling to the enemy, care must be taken to ensure that assets otherwise not in danger of falling to the enemy are not destroyed by blast or fragments. The DoD Components shall develop specific guidance for the implementation of and training for emergency destruction of munitions. Normal disposal operations shall be conducted IAW paragraphs C9.8.3. and C9.8.4.

C10.4.8. Separation From Fuel

C10.4.8.1. Operational Storage. Quantities up to 500 gallons [1,893 liters] shall be separated from each PES by at least 50 ft. [15.24 m]. Quantities between 500 to 5,000 gallons [1,893 to 18,927 liters] shall be separated from each PES by at least 100 ft. [30.5 m]. Fuel should be located downhill and diked to contain a possible fuel spill.

C10.4.8.2. Bulk Fuel Storage. For more than 5,000 gallons [18,927 liters] apply paragraph C9.8.14.

Table C10.T4. QD for Contingency, Combat, and MOOTW Airfields

TO ES	FROM AIRFIELD PES **MINIMUM SEPARATION DISTANCE**	**ASSET PRESERVATION DISTANCE**
Manned functions not related to the combat mission	IBD	IBD
Base boundaries without an easement unless manifestly unsuitable	IBD	IBD
Crew support and billeting areas	IBD	IBD
Central airfield support facilities	ILD	Note 1
Functions related to the explosives mission (manned)	ILD	Notes 1,2
Flight line fire and rescue services	ILD	Note 1
Manned munitions operating locations (assembly, maintenance, refurbishment, etc)	ILD	Note 1
To any other explosives loaded aircraft or CAPA	IMD	Notes 1,2
Flight line Munitions HA	IMD	Notes 1,2
Military use runways and taxiways	$D=4.5*NEWQD^{1/3}$ [$D=1.79*NEWQD^{1/3}$]	Notes 1,2

Notes for Table C10.T4.:

1. For HD 1.1 material, use $d = 24W^{1/3}$ [$9.52\ W^{1/3}$] [English EQN C10.T4-1] [Metric EQN C10.T4-2] or $d=30W^{1/3}$ [$11.90\ W^{1/3}$] [English EQN C10.T4-3] [Metric EQN C10.T4-4]. For HD 1.2, 1.3, or 1.4 apply PTRD from Chapter 9.
2. For aircraft, asset preservation distances may not provide protection from fragments. To protect against low-angle, high-energy fragments, aircraft should be barricaded.

C11. CHAPTER 11
TOXIC CHEMICAL MUNITIONS AND AGENTS

C11.1. SCOPE AND APPLICABILITY

C11.1.1. This chapter sets forth standards for protecting workers and the general public from the harmful effects of toxic chemical munitions and agents associated with research, testing, training, preservation and maintenance operations, storage, and demilitarization at laboratories, manufacturing plants, and depots as well as other DoD Component agent operations, exclusive of combat training and operations. They apply to:

C11.1.1.1. Blister agents (examples include, but are not limited to):

C11.1.1.1.1. H/HD – 2,2’ Dich1orodiethyl Sulfide (common name is distilled mustard).

C11.1.1.1.2. H/HT – 60 percent HD and 40 percent 2,2’ Dichloroethylthiodiethyl Ether (common name is mustard-T mixture).

C11.1.1.1.3. L – Dichloro (2-chlorovinyl) Arsine (common name is Lewisite).

C11.1.1.2. Nerve agents (examples include, but are not limited to):

C11.1.1.2.1. GB – Isopropyl Methylphosphonofluoridate (common name is sarin).

C11.1.1.2.2. GA – Dimethylaminoethoxy-cyanophosphine Oxide (common name is tabun).

C11.1.1.2.3. VX – 0-ethyl S-[2-(diisopropylamino) Ethyl] Methylphosphonothioate.

C11.1.1.2.4. GD – Pinacolyl Methylphosphonofluoridate (common name is soman).

C11.1.1.2.5. Mixtures of these agents.

C11.1.2. Toxic chemical munitions may present additional hazards of blast, fragments, and thermal effects. Standards relating to these explosives hazards are addressed in other chapters.

C11.1.3. This standard does not apply to the immediate disposal of toxic chemical munitions or decontamination of toxic chemical agents during an emergency when the delay will cause a greater danger to human life or health.

C11.1.4. The DoD Components are responsible for developing implementing instructions and safety procedures for logistical movements, training, and field operations.

C11.1.5. The requirements of MIL-STD-882D (Reference (ab)) shall be followed.

C11.2. SITING CRITERIA

C11.2.1. Hazard Distance Calculations (See Public Exclusion Distance). Hazard distance calculations shall conform to Reference (q). DDESB approved software (e.g., D2PC (Reference (ac))) that implements the methodology of Reference (q) may be used to perform these calculations. The calculated hazard distance is based on the greater of the MCE or the toxic chemical agent MCE and is bounded by the one percent lethality arc for a toxic chemical agent source containing a dose of more than:

C11.2.1.1. 10.0 mg-min/m^3 of GB.

C11.2.1.2. 4.3 mg-min/m^3 of VX.

C11.2.1.3. 150.0 mg-min/m^3 mustards.

C11.2.1.4. 0.1 mg for inhalation-deposition of VX.

C11.2.2. Positive means shall be taken to ensure that unprotected personnel do not enter hazard zones and shall include written procedures that must be reviewed and updated, as necessary. However, positive control of an area, which ensures personnel can evacuate or be protected before exposure in the case of an accident, may be developed instead of absolute exclusion. Details of such control procedures shall be included in the site and general construction plans.

C11.3. WORKPLACE AIRBORNE EXPOSURE LIMITS (AEL)

The Army Surgeon General establishes the maximum permissible concentrations (AEL) listed in Table C11.T1. AEL are time-weighted averages (TWA) or ceiling values that define the permissible limits of exposure for unprotected personnel.

Table C11.T1. Airborne Exposure Limits

	Chemical Agents (mg/m^3)				
	GD	GA/GB	VX	H,HD,HT	L (Note 1)
Unmasked Agent Worker					
8-hour TWA in any work shift	3×10^{-5}	1×10^{-4}	1×10^{-5}	3×10^{-3} (Note 2)	3×10^{-3} (Note 2)
Non-agent Worker and General Population					
72-hour TWA	3×10^{-6}	3×10^{-6}	3×10^{-6}	1×10^{-4} (Note 3)	3×10^{-3} (Note 2)
Ceiling Value (Note 4)	3×10^{-5}	1×10^{-4}	1×10^{-5}	3×10^{-3} (Note 2)	3×10^{-3} (Note 2)
Source Emission Limit					
1-hour TWA	1×10^{-4}	3×10^{-4}	3×10^{-4}	3×10^{-2}	3×10^{-2}

Notes for Table C11.T1.:

1. All concentrations measured as Lewisite.
2. This value also represents the technologically feasible real time detection limit. HT is measured as HD.
3. It is recommended that this level of detection (using a 12-hour sampling time) be demonstrated and used at all sites where mustard shall be transported and destroyed.
4. The concentration of chemical agent that may not be exceeded for any period of time. Practically, it may be an average value over the minimum time to detect the specified concentration.

C11.4. TOXIC CHEMICAL AGENT HAZARD ANALYSES, MEASUREMENTS, AND EXPOSURE CONTROLS

C11.4.1. Hazard Analyses

C11.4.1.1. Hazard analyses shall be conducted for all new operations involving toxic chemical agents or when there is a change in existing production, process, or control measures that may result in an increase in airborne or contact concentrations of toxic chemical agents. Hazard analyses shall be retained for 40 years.

C11.4.1.2. If hazard analyses indicate that an operation may expose personnel to toxic chemical agents above the AEL, control measures shall be instituted and procedures shall be established so that the actual exposure is measured.

C11.4.2. Measurements

C11.4.2.1. Devices for sampling and analyzing workplace air shall measure and alarm within 10 minutes when toxic chemical agents are present in excess of the 8-hour TWA concentrations.

C11.4.2.2. When the interior of reservoirs, pipes, and such systems are sampled, the volume of the item or system being sampled as well as the volume of the sample must be recorded and associated with the measured concentrations.

C11.4.2.3. Decontaminating solutions shall not be analyzed for residual toxic chemical agent for the purpose of certifying a level of decontamination. Suspected toxic chemical agents shall be extracted from samples with suitable solvents where analyses are required. Air may be an appropriate solvent for volatile agents.

C11.4.3. Exposure Control

C11.4.3.1. When exhaust systems are used to control exposure, measurements of system effectiveness such as static pressure shall be made at the start of each operation and at least every 3 months.

C11.4.3.2. Before beginning toxic chemical agent operations, the hazard zone associated with those operations shall be under positive control in accordance with paragraph C11.2.2.

C11.4.3.3. If personnel exposures will equal or exceed the applicable AEL, personnel shall be protected by personnel protective equipment (PPE) specifically approved by the Army Surgeon General or as indicated in Table C11.T2.

C11.4.3.4. Procedures shall be developed to address hazards involved in maintenance and repair operations.

Table C11.T2. PPE[1] and Employee Exposure Potential[2]

Occupational Scenario	Toxic Chemical Agents (mg/m^3)				
	GD	GA/GB	VX	H,HD, & HT	L
1. Unmasked agent worker					
A full facepiece, chemical canister, air purifying protective mask will be on hand for escape. (The M9, M17 or M40 series masks are acceptable for that purpose. Other masks certified as equivalent may be used.) (Note 5)	3×10^{-5} (Note 3)	1×10^{-4} (Note 3)	1×10^{-5} (Note 3)	3×10^{-3} (Note 4)	3×10^{-3} (Note 4)
2. Masked personnel in routine operations					
a. A National Institute of Occupational Safety and Health (NIOSH) approved pressure demand full facepiece SCBA or supplied air respirator with escape air cylinder may be used. b. Alternatively, a full facepiece, chemical canister, air purifying protective mask is acceptable for that purpose (i.e., M9, M17, or M40 series or other certified equivalent.) (Note 5)	$>3 \times 10^{-5}$ to 6×10^{-2}	$>1 \times 10^{-4}$ to 2×10^{-1}	$>1 \times 10^{-5}$ to 2×10^{-2}	3×10^{-3}	3×10^{-3}
3. Personnel conducting emergency operations or operations in unknown but potentially high agent concentrations					
a. NIOSH approved pressure demand full facepiece SCBA with protective ensemble. (Notes 7 & 8) b. During emergencies, the best available respiratory protection and personnel ensemble will be used. If protection in 3a above is not available, use of a full facepiece, chemical canister, air purifying protective mask with hood is acceptable. Only the M9 or M40 series masks are acceptable. (Notes 7 & 8)	$>6 \times 10^{-2}$	$>2 \times 10^{-1}$	$>2 \times 10^{-2}$	$>3 \times 10^{-3}$ (Note 6)	$>3 \times 10^{-3}$ (Note 6)

Notes for Table C11.T2.:

1. Qualitatively fit all workers required to use respiratory protective devices. Quantitative fit testing may be performed using surrogate masks.
2. Employee exposure potential is based on an 8-hour TWA measurement. All values on this table are 8-hour TWA unless otherwise noted. The TWA is the concentration to which workers may be repeatedly exposed, for a normal 8-hour workday and 40-hour workweek, day after day, without adverse effects. TWA permit

excursions above the limit provided they are compensated by equivalent excursions below the limit during the workday. Excursions above the TWA should be controlled even where the 8-hour TWA is within recommended limits.

3. Determined by required continuous air monitoring.
4. This represents ceiling value determined by continuous real time monitoring (with alarm) at the 0.003 mg/m^3 level of detection. Respiratory protection must be immediately available in case concentration rises above 0.003 mg/m^3. Engineering and work practice controls shall be used to limit employee exposure potential to the extent practical.
5. Air-purifying masks may not be used in oxygen deficient atmospheres.
6. Because agents H and L are potential carcinogens, the highest level of respiratory and dermal protection shall be provided to all workers exposed. An air-purifying protective mask is not suitable for this purpose.
7. Examples of such protective ensembles include Toxicologic Agent Protective Ensemble, Self-Contained (TAPES) and the Demilitarization Protective Ensemble (DPE).
8. For emergency masked escape, a full facepiece, chemical canister, air-purifying protective mask (DoD Component-certified masks) is acceptable.

C11.5. MEDICAL SURVEILLANCE

Before being assigned to toxic chemical agent duties and on an annual basis thereafter, health assessments shall be provided for each employee to establish a baseline health record. Annual assessments shall be used to determine deviations from the baseline.

C11.6. WORKER PPE

C11.6.1. Positive engineering and administrative controls shall be incorporated in all operations involving toxic chemical agents to preclude or minimize the need for PPE.

C11.6.2. A respiratory protection program shall be established in conformance with DoD Instruction 6055.1 and DoD Instruction 6055.5 (References (ad) and (ae)) for approved respiratory requirements. The wearer's face shall be clean-shaven to the extent that there is no interference of any facial hair growth with the sealing surfaces of the protective mask. Personnel with beards shall be denied access to agent storage and operating areas, unless suitable emergency egress respirator(s) can be provided.

C11.6.3. Personnel shall use PPE recommended by the hazard analysis. (See Table C11.T2.)

C11.7. ADMINISTRATIVE AND WORK PRACTICE CONTROLS

C11.7.1. Containment

C11.7.1.1. Containment is the principal control measure for prevention of exposure of personnel to toxic chemical agents.

C11.7.1.1.1. Total containment is required for those operations involving toxic chemical munitions that contain explosive components when the operation may subject the explosives components to a potential initiating stimulus. Total containment requires the

equipment or facility to be a DDESB-approved design capable of containing all the reaction gases, detectable toxic chemical agents, and fragments from the largest explosion or detonation that could occur without causing equipment or facility rupture or leakage. Operations requiring total containment include, but are not limited to:

C11.7.1.1.1.1. Toxic chemical munition cutting, sawing, milling, drilling, punching, or shearing operations that require the machine tool to remove or displace metal before or after contact with the explosives.

C11.7.1.1.1.2. Operations in which the toxic chemical munition arming and functioning environments can be duplicated by the equipment or process.

C11.7.1.1.1.3. Disassembly of armed or possibly armed toxic chemical munitions.

C11.7.1.1.1.4. Disassembly of explosive components from toxic chemical munitions that requires application of significantly greater leverage or torque than that required for assembly.

C11.7.1.1.2. Vapor containment is required for those operations involving toxic chemical agents without explosives components and for those operations involving toxic chemical munitions containing explosive components that do not subject the explosive components to a potential initiating stimulus. Vapor containment requires the equipment or facility to be a DDESB-approved design capable of containing non-explosion releases of toxic chemical agents. Operations requiring vapor containment include, but are not limited to:

C11.7.1.1.2.1. Toxic chemical munitions punching, drilling, or sawing operations for removal of toxic chemical agents.

C11.7.1.1.2.2. Burster-well removal.

C11.7.1.1.2.3. Transfer of toxic chemical agents from bulk storage tanks, containers, or toxic chemical munitions into holding tanks, chemical detoxification reactors, incinerators, or similar processing equipment (e.g., may be found in a production, demilitarization, or disposal line).

C11.7.1.1.2.4. Research, development, test, and evaluation (RDT&E) chamber operations.

C11.7.1.2. Containment is not required for operations associated with field storage and maintenance activities (e.g., shipping, storage, receiving, re-warehousing, minor maintenance, surveillance inspection, repair, and encapsulation).

C11.7.2. Training and Information. Anyone who works with toxic chemical munitions and agents (e.g., agent workers, firefighters, medical and security personnel) shall receive training to enable them to work safely and to understand the significance of toxic chemical agent exposures.

This training shall include, but is not limited to, information on sources of exposure, adverse health effects, practices and controls used to limit exposures, environmental issues, medical monitoring procedures, and employee responsibilities in health protection programs.

C11.7.3. Recordkeeping. Recordkeeping pertaining to exposure determination and measurement, mechanical ventilation, employee training, medical surveillance, and access to records shall be consistent with Reference (ae).

C11.7.4. Labeling and Posting of Hazards

C11.7.4.1. Signs and labels to warn personnel of hazards of toxic chemical agents are required for:

C11.7.4.1.1. Work areas.

C11.7.4.1.2. Contaminated clothing and equipment.

C11.7.4.1.3. Identification of restricted-use areas.

C11.7.4.2. When items or materials are contaminated or suspected of being contaminated with toxic chemical agents, they shall be marked as follows:

C11.7.4.2.1. The applicable supplemental chemical hazard symbol (see Figure C8.F3.) with "XXXXX" indicates that the items or materials have been completely decontaminated and may be released for general use or sold to the general public. Items or materials are completely decontaminated when they have been subjected to procedures that are known to completely degrade the toxic chemical agent molecule, or when analyses, approved by the DDESB, have shown that the total quantity of toxic chemical agent is less than the minimal health effects dosage as determined by the Office of the Surgeon General of the Army.

C11.7.4.2.2. The applicable supplemental chemical hazard symbol (see Figure C8.F3.) with "XXX" indicates that the items or materials have been decontaminated. Tests or monitoring shall be conducted in accordance with DoD Component requirements to verify that concentrations do not exceed the AEL for an unmasked agent worker in Table C11.T1.

C11.7.4.2.3. The applicable supplemental chemical hazard symbol (see Figure C8.F3.) with a single "X" indicates the items or materials have been partially decontaminated of the indicated toxic chemical agent. Further decontamination processes are required before the item is moved or any maintenance or repair is performed without the use of PPE.

C11.7.4.3. When facilities or rooms are contaminated or suspected of being contaminated with toxic chemical agents, they shall be marked as follows (excluding magazines that use the supplemental chemical hazard symbols shown in Figure C8.F3.):

C11.7.4.3.1. 5R – No Agent Hazard. A supplemental chemical hazard symbol (see Figure C8.F3.) with "RRRRR" indicates that all previously contaminated surfaces are

decontaminated and analyzed to demonstrate the absence of residual toxic chemical agents, and air sampling indicates toxic chemical agent vapor concentration is less than the 8-hour TWA for an unmasked agent worker (see Table C11.T1.). The air is sampled at a temperature of 70 °F [21.1 °C] or greater, with the facility's ventilation system operating.

C11.7.4.3.2. 4R – Controlled Agent Vapor Hazard. A supplemental chemical hazard symbol (see Figure C8.F3.) with "RRRR" indicates that all previously contaminated surfaces are decontaminated using locally approved procedures and air sampling indicates toxic chemical agent vapor concentration is less than the 8-hour TWA for an unmasked agent worker (see Table C11.T1.). The air is sampled at a temperature of 70 °F [21.1 °C] or greater, with the facility's ventilation system operating.

C11.7.4.3.3. 3R – Contained Agent Hazard. A supplemental chemical hazard symbol (see Figure C8.F3.) with "RRR" indicates that any toxic chemical agents are in containers or packaging which, if left undisturbed, will prevent agent vapor or contact hazards.

C11.7.4.3.4. 2R – Agent Vapor Hazard. A supplemental chemical hazard symbol (see Figure C8.F3.) with "RR" indicates that any toxic chemical agents are in containers or packaging which, if left undisturbed, prevent contact hazards.

C11.7.4.3.5. lR – Agent Hazard. A supplemental chemical hazard symbol (see Figure C8.F3.) with "R" indicates the possibility of toxic chemical agent contact or vapor hazards, or agents in a single container or packaging that may leak. This includes rooms being used for operations that may cause agents to be released from engineering controls due to accidental causes.

C11.7.5. Emergencies

C11.7.5.1. In case of an accidental release of a toxic chemical agent that may result in personnel exposure, all nonessential and unprotected personnel shall evacuate immediately. Contaminated areas shall be decontaminated to applicable Table C11.T1. AEL before normal operations are resumed.

C11.7.5.2. Special medical surveillance shall be started within 24 hours for all personnel present in the potentially affected area at the time of the emergency.

C11.7.5.3. The DoD Component shall maintain up-to-date chemical accident and incident control plans and conduct practice exercises of these plans at least annually.

C11.7.6. Toxic Chemical Agent Decontamination

C11.7.6.1. When toxic chemical agents are spilled or released, immediate action shall be taken to contain the spill and clean up the agent in the immediate area of the spill.

C11.7.6.2. Before leaving contaminated work areas, the external surfaces of the PPE shall be decontaminated.

C11.7.6.3. When PPE becomes contaminated with toxic chemical agents, the outside layer of clothing shall be removed and decontaminated as soon as possible.

C11.7.6.4. PPE that has been worn in known contaminated areas (toxic chemical agent detected) shall be decontaminated and monitored before reuse. Because mustard penetrates into many protective materials with time, reuse of any PPE that has been contaminated with liquid mustard is not permitted. PPE that has been worn in potentially contaminated areas (when no agent leakage has been visually observed or detected by use of field detection equipment) shall be monitored before being moved to areas accessible to non-agent workers.

C11.7.6.5. Monitoring of protective clothing and equipment shall include containerization at 70 °F [21.1 °C] or higher for at least 4 hours, with subsequent analysis of a portion of the interior atmosphere of the container for the toxic chemical agent. The volume of the container as well as the sample volume must be noted.

C11.7.6.6. PPE found to emit toxic chemical agent concentrations above the XXX level after decontamination shall not be reused. They shall be disposed of in accordance with DoD Component guidance and in compliance with all Federal, State, and local requirements.

C11.7.6.7. The piping, tanks, etc., of the disposal systems shall be filled with decontaminating solution and a contact time of 10 half lives or greater shall be provided before toxic chemical agent disposal systems are converted to different agents. Walls and floors of process areas shall be decontaminated to ensure the absence of contact hazards.

C11.7.7. Recertification of Protective Clothing. After decontamination, clothing that has been determined to be XXX may be laundered, visually examined, and re-certified by the DoD Component for use. Other PPE, such as boots and gloves, shall be tested, laundered, and re-certified for use in the same manner.

C11.7.8. Transportation of Items or Materials Contaminated with Toxic Chemical Agents. Items or materials contaminated with toxic chemical agents may be transported from one location to another. They shall be encapsulated within an agent-tight barrier. In addition, the following items or materials shall be overpacked in compatibly lined drums or provided with other suitably tested containment before being transported:

C11.7.8.1. Contaminated potentially with liquid toxic chemical agent.

C11.7.8.2. Failed a XXX determination.

C11.7.8.3. Suspected of offering hazards due to skin exposure to a toxic chemical agent.

C11.7.9. Transportation of Toxic Chemical Munitions and Bulk Agents. The requirements established by the DoD Component shall be met.

C11.8. ENGINEERING DESIGN GUIDANCE FOR FACILITIES

The chemical handling and maintenance areas associated with industrial operations shall be isolated from the main facility and shall be operated at a negative pressure with respect to the main facility area. The agent handling rooms shall be equipped with local exhaust ventilation which may be cascaded to more contaminated areas and exhausted out of a common exhaust stack. All air leaving the facility shall be filtered through redundant filter banks or other DDESB-approved decontamination methods. The flow of air (negative pressures) shall go from less-hazardous areas to more-hazardous areas.

C11.8.1. Air Ventilation Systems. Air ventilation systems shall be designed and periodically tested to ensure that control of toxic chemical agent-contaminated exhaust shall not exceed source emission limits of Table C11.T1.

C11.8.1.1. Filters or scrubbers for exhaust air shall be designed and approved for the MCE of the operations involved.

C11.8.1.2. Redundant filters shall be used when filter breakthrough of the toxic chemical agent is expected. Filters shall be changed when agent breaks through the filter that is just upstream of the last filter.

C11.8.1.3. All exhaust equipment shall have backup blowers that automatically engage if the main blower fails.

C11.8.1.4. Filter systems shall be fitted with the means to measure the pressure drop across the filters.

C11.8.1.5. Exhaust hoods and glove boxes shall be designed to contain toxic chemical agents so that concentrations specified in Table C11.T1. for unmasked agent workers are not exceeded outside engineering controls. The design of these items shall permit airflow adjustments sufficient to maintain the required protection level when laboratory equipment is in place.

C11.8.1.5.1. Catch basins and traps or spill trays of sufficient capacity to contain the quantity of toxic chemical agent involved shall be provided within hoods and glove boxes.

C11.8.1.5.2. Glove boxes shall be used when the hazards analysis indicates that toxic chemical agent aerosols or dusts may be present during an operation.

C11.8.1.6. Special design features shall be used when exposed explosives are involved to segregate explosives from air ventilation systems.

C11.8.2. Mechanical and Utilities Design for Facilities

C11.8.2.1. The design parameters shall consider equipment and process layout, makeup airflow, and operational positions with regard to maintaining flow balance and cross currents.

The system shall maintain negative pressure in operating areas in relation to hallways, offices, and other nontoxic chemical agent areas.

C11.8.2.2. Working surfaces, walls, floors, and ceilings within a facility likely to be contaminated shall be constructed of agent-resistant materials. Flooring material shall cover wall surfaces to a height of 6 in [15.2 cm].

C11.8.2.3. Access to nontoxic chemical agent areas (e.g., utilities, mechanical rooms, etc.) shall be accomplished without entry into toxic chemical agent areas.

C11.8.2.4. Electrical systems shall be equipped with a backup power source designed to start automatically and supply sufficient power to support critical functions in the event of power outage.

C11.8.2.5. Safety showers and eyewash fountains shall be readily accessible and tested.

C11.8.2.6. Water outlets in a toxic chemical agent operational facility shall be fitted with backflow devices.

C11.8.2.7. Dedicated liquid waste systems shall be designed to collect and hold potentially toxic chemical agent-contaminated effluent produced by the activity until disposal in accordance with applicable laws. Vents or other openings in the waste system shall be fitted with approved toxic chemical agent filters or connected or exhausted to facility toxic chemical agent air filtration system.

C11.8.2.8. Decontamination facilities of sufficient capacity to catch and contain liquid effluents shall be provided for toxic chemical agent operations. Adequate decontamination solution shall be available for immediate use on personnel or on facilities.

C11.8.2.9. When operations require work assignments to be conducted at exposure levels above or potentially above the AEL for unmasked agent workers (see Table C11.T1.), change facilities with showers shall be provided.

C11.8.3. General Design Considerations

C11.8.3.1. Facility Alarms and Monitors for Engineering Systems. Each toxic chemical agent facility shall have a master alarm and control panel that will permit functional verification of the exhaust blowers and air handlers. Visual and audible alert alarms shall be keyed to this master alarm panel to indicate failures.

C11.8.3.2. Fire Detection and Protection. Fire detection and protection systems for production and maintenance facilities shall comply with the requirements and guidelines published in ARLCD-CR-80049 (Reference (af)).

C11.8.3.3. Bulk Storage Tanks. Impermeable dikes to hold at least 110 percent of the tank capacity, plus the required volume of decontaminant solution, shall be placed around all

bulk agent tanks, reactors, and mixers. However, a system designed to pump the toxic chemical agent from the dikes to a vessel designed to accommodate the decontamination will satisfy this requirement that the dike contain sufficient volume for the decontaminating solutions.

C11.8.3.4. Isolation of Facility Functions. Toxic chemical agent facilities shall be designed to isolate unrelated activities by physical barriers or approved engineering controls. Design criteria shall prevent explosives from entering drain lines and sumps containing toxic chemical agents.

C11.8.3.5. Monitoring. Air monitoring stations shall be established around toxic chemical agent operational areas and storage areas to determine if Table C11.T1. AEL are exceeded. In laboratory environments this requirement is met by routine area monitors and stack sampling.

C11.8.3.5.1. Monitoring analyses conducted for the purpose of demonstrating compliance with AEL shall be based on DoD Component-certified reference materials.

C11.8.3.5.2. Monitoring analyses conducted for the purpose demonstrating compliance with AEL shall be conducted under quality assurance plans that address the following issues:

C11.8.3.5.2.1. Production, characterization, and storage of DoD Component-certified reference materials.

C11.8.3.5.2.2. Documentation of precision, accuracy, and quantification limits of analytical methodology.

C11.8.3.5.2.3. External oversight of laboratory results.

C12. CHAPTER 12
REAL PROPERTY KNOWN OR SUSPECTED TO CONTAIN MUNITIONS AND EXPLOSIVES OF CONCERN AND CHEMICAL AGENTS

C12.1. SCOPE

This chapter:

C12.1.1. Establishes explosives safety standards that, when applied, will protect people and real property from explosive and CA hazards associated with:

C12.1.1.1. Real property known or suspected to contain:

C12.1.1.1.1. Munitions and explosives of concern (MEC).

C12.1.1.1.2. CA in other than munitions configurations (e.g., DoD laboratory vials, CA identification sets, one-ton containers, CA-contaminated soil).

C12.1.1.2. Munitions responses to MEC. (A munitions response to CA-filled munitions will be addressed as a chemical warfare material (CWM) response.)

C12.1.1.3. CWM responses.

C12.1.2. Establishes a process for determining site-specific actions that, when taken, will:

C12.1.2.1. Ensure explosives safety is addressed throughout munitions responses to MEC.

C12.1.2.2. Ensure CA safety and, when applicable, explosives safety is addressed throughout CWM responses.

C12.1.2.3. Result in DDESB approval of required safety submissions for munitions responses to MEC and for CWM responses. (See section C12.5. for required safety submission and their contents.)

C12.1.2.4. Document and report completion of:

C12.1.2.4.1. Munitions responses to MEC.

C12.1.2.4.2. CWM responses.

C12.1.3. Does not apply to:

C12.1.3.1. Operational ranges, with the exception of military munitions burial sites located on such ranges.

C12.1.3.2. Explosives or munitions emergency responses.

C12.2. EXPLOSIVES SAFETY STANDARDS FOR THE IDENTIFICATION AND CONTROL OF AREAS KNOWN OR SUSPECTED TO CONTAIN MEC OR CA

To ensure explosives and CA safety risk is identified and controlled on real property currently or formerly under the jurisdiction, custody, or control of a DoD Component, DoD Components must:

C12.2.1. Identify all areas known or suspected to present explosive or CA hazards (Geographic Information Systems (GIS) should be used):

C12.2.1.1. In installation master plans for active installations. (In some cases, these areas are also required to be identified in other documents.)

C12.2.1.2. In DoD's Military Munitions Response Site Inventory for those sites that are included in the Military Munitions Response Program (see Management Guidance for the Defense Environmental Restoration Program (DERP) (Reference (ag)) and 10 U.S.C. 2710(a) (Reference (ah))).

C12.2.2. Maintain permanent records of those areas identified pursuant to subparagraph C12.2.1. and ensure such records are readily available to current and future users of the property. Records should be retained for areas such as operational ranges, former ranges, current or former munitions manufacturing facilities, current or former sites used for munitions demilitarization activities, and locations previously used for the burial of munitions. Records shall:

C12.2.2.1. When practicable, include the nomenclature and the known or suspected location.

C12.2.2.2. Summarize any clearance or response (removal or remediation) actions, or explosives or munitions emergency responses previously conducted within the area.

C12.2.3. Prohibit unnecessary access and take appropriate action to deter unauthorized access to areas under DoD control that are known or suspected of containing potential explosive or CA hazards. Such actions may include establishing access controls (e.g., fencing the area, establishing roving security patrols), which may be risk-based, or providing public notifications of any potential hazards (e.g., posting unexploded ordnance (UXO)-hazard warning signs, conducting UXO-safety education programs). When used, signs must be kept legible and, when appropriate, in the predominant languages of the region, or as pictograms. When the Department of Defense does not have ownership, jurisdiction, or control of the area (e.g., Formerly Used Defense Sites (FUDS)), the responsible DoD Component shall, at a minimum, provide written notification of the potential explosive or CA hazards to the property owner and any known tenants. A record of this notification must be maintained as a permanent record. (See subparagraph C12.2.2.)

C12.2.3.1. DoD Components should, unless there is evidence to the contrary, assume the following areas present explosive hazards:

C12.2.3.1.1. Impact areas on operational ranges. Exceptions are ranges known to have been exclusively used for training with only small arms ammunition.

C12.2.3.1.2. Former ranges known or suspected to contain MEC.

C12.2.3.1.3. Outdoor demolition areas, to include locations used for open burning (OB) or open detonation (OD).

C12.2.3.1.4. Areas that are associated with military munitions production, demilitarization, renovation, or similar processes (e.g., operating buildings and any installed equipment) that generated explosives residues (e.g., dust, vapors, liquids) and that might have become contaminated with such residues in concentrations sufficient to present explosive hazards, to include areas receiving processing wastewater (e.g., settling ponds, drainage swales).

C12.2.3.2. DoD Components should, unless there is evidence to the contrary, assume the following areas present CA hazards:

C12.2.3.2.1. Former CWM or CA burial sites.

C12.2.3.2.2. Former CWM or CA disposal areas.

C12.2.3.2.3. Former CWM impact areas.

C12.2.3.2.4. Former training areas used for training with CWM or CA.

C12.2.3.2.5. Former CWM or CA production and demilitarization facilities.

C12.2.3.3. When access to areas known or suspected to present explosive or CA hazards is necessary, a risk assessment to evaluate the potential hazards associated with the proposed activity shall be completed and methods to mitigate any potential exposures shall be implemented before access is allowed. (When access is necessary to real property not under DoD ownership, custody, or control, the DoD Component should obtain a right of entry for the property.)

C12.2.4. Prohibit the disposal (e.g., burying, dumping) of military munitions on land or in water except when specifically authorized by the DoD Component. Such disposal actions must comply with applicable regulatory requirements. This prohibition does not preclude:

C12.2.4.1. The covering of munitions with earth to control fragments and noise during authorized destruction by detonation.

C12.2.4.2. The use of *in situ* capping when implemented as an engineered remedy under an authorized response action.

C12.3. EXPLOSIVES AND CA SAFETY ASPECTS OF RESPONSE ACTIONS

C12.3.1. General.

C12.3.1.1. Plans for munitions responses to MEC or CWM responses shall:

C12.3.1.1.1. Ensure close coordination, as applicable, between DoD explosives and CA safety organizations, DoD environmental organizations, and appropriate regulatory agencies and stakeholders.

C12.3.1.1.2. Specify those actions necessary to protect DoD personnel, installation-related personnel, and the public from exposure to explosive and CA hazards.

C12.3.1.1.3. Provide the design for and explain the execution of:

C12.3.1.1.3.1. Munitions responses, when MEC has been determined to present an unacceptable risk.

C12.3.1.1.3.2. CWM responses, when CA, regardless of configuration, has been determined to present an unacceptable risk.

C12.3.1.1.4. Explain how the selected response actions will achieve a degree of protectiveness necessary for the current, determined, or reasonably anticipated future land use.

C12.3.1.1.4.1. Provide the rationale for selection of technologies to be used to detect anomalies that can indicate the presence of MEC or CA, regardless of CA configuration.

C12.3.1.1.4.2. Address how periodically (e.g., during 5-year reviews or consistent with long-term monitoring agreements) completed response actions will be reviewed to ensure the response remains effective. The need for such reviews is particularly important in areas where natural phenomena (e.g., frost heave, soil erosion, droughts, or tidal action) could expose MEC or CA, regardless of CA configuration, or where Land Use Controls (LUC) constitute a major element of the response. These reviews shall consider:

C12.3.1.1.4.2.1. The explosives safety aspects of munitions responses to MEC.

C12.3.1.1.4.2.2. The CA safety and, when applicable, the explosives safety aspects of CWM responses.

C12.3.1.1.5. Address how the personnel qualification provisions of DDESB TP No. 18 (Reference (ai)) will be met.

C12.3.1.1.6. Be approved by the DDESB for compliance with these Standards.

C12.3.1.1.7. Provide for the submission of an After Action Report (AAR) to the DDESB upon completion of the response. AAR are not provided for DDESB approval, but are used to close out files maintained by the DDESB Staff.

C12.3.1.2. Residual Explosive and CA Hazards

C12.3.1.2.1. Some areas that the military has used for munitions-related activities (e.g., live-fire training or testing, OB/OD) or for CA-related activities may not be appropriate, even after the performance of response activities, for certain uses (e.g., residential development). Such areas include former military range impact areas on which the military has used munitions containing either high explosives or CA and sites used for either OB or OD. Such areas may, after a response, be better suited for uses that restrict or limit intrusive activities (e.g., wildlife refuges, surface recreational areas).

C12.3.1.2.2. Some MEC or CA, regardless of CA configuration, might not be detected or removed during a response. Although residual risks can be managed (e.g., by use of agreed-upon LUC, to include safety education; recurring reviews; and construction support), residual hazards might still exist.

C12.3.1.2.3. From an explosives and, when applicable, CA safety perspective, the degree to which MEC or CA removal is undertaken depends largely on the current, determined, or reasonably anticipated future land use. When MEC or CA, regardless of CA configuration, cannot be removed to the degree necessary to safely allow the current, determined, or reasonably anticipated future land use, the use must be changed or appropriately restricted to obtain DDESB approval of the relevant plan.

C12.3.1.3. When DoD does not control the land and the imposition of LUC is not possible (e.g., on FUDS), the responsible DoD Component should, at a minimum, provide the property owner, and any known tenants, written notification of the potential residual explosive or CA hazards and the risks inherent in any use of property that is inconsistent with those hazards.

C12.3.2. Explosives Safety and CA Safety Aspects in the Selection and Design of Responses

C12.3.2.1. Explosives safety must be addressed in the selection and design of a munitions response to MEC. CA safety, and when applicable, explosives safety must be addressed in the selection and design of a CWM response. The protection afforded by a response must be consistent with the current, determined, or reasonably anticipated land use. The design of the response that is included in the required submission must consider the site-specific information below.

C12.3.2.1.1. Historical Information. Historical information, which is documented in a written report, is gathered through a records search, to include the permanent records outlined in section C12.2., and interviews. The following information is required:

C12.3.2.1.1.1. The boundaries of the response area. For munitions responses, the Munitions Response Area (MRA) boundaries and, when appropriate, the boundaries of any Munitions Response Sites (MRS) (e.g., firing points, impact areas, and burial sites) within the MRA are required.

C12.3.2.1.1.2. The type of MEC known or suspected to be present based on the types of munitions-related operations, training, or testing previously performed in the MRA or MRS.

C12.3.2.1.1.3. The type and configuration of any CA known or suspected to be present.

C12.3.2.1.2. Land Use. Land use is the current, determined, or reasonably anticipated future use of real property. Because portions of the response area (e.g., the MRA or MRS) might be used differently (e.g., public highway, wildlife refuge, sports field, industrial complex), different responses actions (e.g., surface removal, subsurface removal, no removal, remedial response) may be appropriate within any given response area.

C12.3.2.1.2.1. Where the land use is, or will be, limited to surface activities, the munitions or CWM response may only involve removing surface MEC or surface CA (i.e., a surface removal). This removal may be technology-aided.

C12.3.2.1.2.2. When the land use will involve or allow intrusive activities to occur, the response will normally require a subsurface removal, and may require follow-on construction support.

C12.3.2.1.2.3. Where the current, determined, or reasonably anticipated land use is compatible with the explosive or CA hazards present or suspected, a response action to remove any explosive or CA hazards may not be necessary.

C12.3.2.1.2.4. Where a response would adversely impact natural or cultural resources, a removal action may not be practical.

C12.3.2.1.3. Results of Onsite Investigations. These results should be used to validate and augment information discovered during the historical review and to determine the specific boundaries of the response area (e.g., the boundary of an MRA or of any MRS within an MRA).

C12.3.2.1.4. Analysis. A detailed analysis of available records, technical data, and the results of onsite investigations. This analysis should evaluate:

C12.3.2.1.4.1. The types of MEC or CA, regardless of CA configuration, known to be present, to include its technical characteristics (e.g., filler, fuzing) and estimated distribution.

C12.3.2.1.4.2. The potential explosive or CA hazards present.

C12.3.2.1.4.3. Physical site characteristics (e.g., flora and fauna (including endangered species), cultural, geological, topographical, hydrological).

C12.3.2.1.4.4. Persons potentially endangered.

C12.3.2.1.4.5. Information from previous or current responses.

C12.3.2.1.5. LUC. The appropriateness and effectiveness of LUC to manage any residual explosives safety or CA safety risks.

C12.3.2.1.6. Technology. The applicability, capabilities, and limitations of available technologies (e.g., detection, discrimination, removal).

C12.3.2.1.7. Other relevant factors.

C12.4. SPECIAL CONSIDERATIONS

C12.4.1. Explosive Soil

C12.4.1.1. Because of some past munitions-related activities (e.g., settling ponds or explosives sumps at munitions production or demilitarization facilities), concentrations of explosives in soil (e.g., sand, sludge, clay) can exist such that the mixture itself presents an explosive hazard. Such mixtures are referred to as “explosive soil.”

C12.4.1.2. The NEWQD of explosive soil is the weight of the mixture multiplied by the explosives concentration (e.g., 1,000 lbs [454 kg] of explosive soil that is 10 percent TNT has an NEWQD of 100 lbs [45.4 kg]).

C12.4.1.3. The concentration necessary to present an explosive hazard depends on the distribution and type of explosives in the soil and the soil’s characteristics.

C12.4.1.3.1. Primary (Initiating) Explosives

C12.4.1.3.1.1. Soil containing 2 percent or more by weight of any primary explosive or mixture of primary explosives presents an explosive hazard and shall be treated as HD 1.1.

C12.4.1.3.1.2. Soil containing less than 2 percent by weight of any primary explosive does not present an explosive hazard.

C12.4.1.3.2. Secondary Explosives.

C12.4.1.3.2.1. Secondary explosives are much less sensitive than primary explosives.

C12.4.1.3.2.2. Soil containing 10 percent or more by weight of either any secondary explosives or a mixture of secondary explosives presents an explosive hazard and shall be treated as HD 1.1.

C12.4.1.3.2.3. Soil containing less than 10 percent by weight of any secondary explosive or a mixture of secondary explosives does not present an explosive hazard.

C12.4.1.3.3. Nitroglycerin, Nitrocellulose, and Nitroguanidine

C12.4.1.3.3.1. Soil containing 10 percent or more by weight of nitroglycerin, nitrocellulose, or nitroguanidine presents an explosive hazard and shall be treated as HD 1.1.

C12.4.1.3.3.2. Soil containing less than 10 percent by weight of nitroglycerin, nitrocellulose, or nitroguanidine does not present an explosive hazard. (Care must be taken when applying this threshold rule to less-permeable soils, such as clay, that may cause nitroglycerin to pond, rather than be absorbed.)

C12.4.1.3.4. Other Energetic Materials Mixtures. The potential explosive hazard of such mixtures in soil may be unknown and may require testing. If the hazard is unknown, manage soil mixtures containing only propellants as secondary explosives, and all other soil mixtures containing energetics (e.g., liquid propellants) as primary explosives.

C12.4.2. Real Property (Buildings and Installed Equipment). Military munitions operating buildings (e.g., munitions production or demilitarization facilities) and any installed equipment may contain residual explosives that present an explosive hazard. Of particular concern are building features (e.g., floors, roofs, walls, drains, internal and external piping, ventilation systems) in which explosives residues could present explosive hazards and industrial equipment, particularly equipment with internal cavities from facilities used in munitions production or demilitarization operations (e.g., cast loading or milling, steam-out) that generated explosives residues (e.g., dust, vapors, liquids). To the extent such buildings or installed equipment is believed to present an explosive or CA hazard, DoD Components must submit to the DDESB for review and approval the explosives or CA safety provisions of any required plans for transfer or use of such buildings and installed equipment before use or transfer for purposes incompatible with the presence of the explosive hazard (see Chapter 16).

C12.4.3. Construction Support

C12.4.3.1. DoD Components should consider the level or construction support required, based on site-specific data, during the below activities.

C12.4.3.1.1. Intrusive activities (e.g., building construction, laying utilities, or road improvements) on property known or suspected to contain MEC or CA, regardless of CA configuration, or on property on which residual explosive or CA hazards may exist.

C12.4.3.1.2. The removal or remediation of debris or media in areas where there is a probability of encountering MEC (e.g., former OB/OD grounds) or CA.

C12.4.3.2. The responsible authority (e.g., installation commander or designated representative) will determine whether such support is required and the level of effort of required support on a case-by-case basis (see subparagraph C12.5.7.). Construction support is determined by the probability of encountering MEC or CA, regardless of CA configuration.

C12.4.3.2.1. Low Probability. "On-call" construction support is appropriate.

C12.4.3.2.1.1. A "low" determination may only be assigned to those areas for which a search of available historical records and onsite investigation data indicates that, given the military or munitions-related activities that occurred at the site, the likelihood of encountering MEC or CA, regardless of CA configuration, is low.

C12.4.3.2.1.2. Munitions-related activities that may merit a "low" determination include, but are not limited to, the former use of the area for live-fire training exclusively with small arms ammunition; for maneuver training, to include maneuver training involving the use of smokes, pyrotechnics, and simulators; as firing points; for munitions inspection, handling, storage, or transfers, to include residue points and inert storage yards; for air defense; or as munitions operating facilities. The exceptions are facilities in which the processes used might have resulted in the generation of concentrations of munitions constituents high enough to present an explosive hazard. Areas on which previous responses have been completed may also qualify for "low" determinations.

C12.4.3.2.1.3. Immediate reassessment by the responsible authority of the level of construction support required is appropriate upon the discovery of MEC or CA, regardless of CA configuration.

C12.4.3.2.2. Moderate to High Probability. "Onsite" construction support should be provided to remove explosive or CA hazards in the construction footprint, per a DDESB-approved ESS or CSS, before intrusive construction or other intrusive activities occur. (NOTE: When the depth of intrusive activities exceeds the detection limits of the detection equipment used, soil should be removed in layers to allow detection and removal of MEC or CA, regardless of CA configuration, in the construction footprint.)

C12.4.3.2.2.1. A "moderate to high" determination may be assigned to those areas for which a search of available historical records or onsite investigation data indicates that, given the military or munitions-related activities that occurred at the site, there is more than a low probability that MEC or CA are present.

C12.4.3.2.2.2. Munitions-related activities that may merit a "moderate to high" determination include, but are not limited to, the former use of the area for live-fire training other than exclusively with small arms ammunition; as operational range impact areas; for OB or OD

of munitions; as munitions operating facilities where processes used might have resulted in the generation of concentrations of munitions constituents high enough to present an explosive hazard; for munitions burial; or for any activities involving CA.

C12.4.4. Anomaly Avoidance

C12.4.4.1. The use of anomaly avoidance techniques is appropriate on properties known or suspected to contain UXO or other munitions (e.g., Discarded Military Munitions (DMM)) that may have experienced abnormal environments to allow the below activities in such areas while avoiding surface explosive or CA hazards and, when necessary, subsurface anomalies. Anomaly avoidance is used when:

C12.4.4.1.1. Surface MEC or CA, regardless of CA configuration, will be avoided during any activities that require entry to the area (e.g., collections of environmental samples, the conduct of cultural resource studies).

C12.4.4.1.2. Subsurface anomalies will be avoided during any intrusive work (e.g., drilling environmental monitoring wells).

C12.4.4.2. During anomaly avoidance:

C12.4.4.2.1. Escort support must be provided by EOD personnel, or:

C12.4.4.2.1.1. Within areas known or suspected to contain MEC, excluding CA, regardless of configuration, by:

C12.4.4.2.1.1.1. UXO-qualified personnel.

C12.4.4.2.1.2.2. UXO Technician I personnel under the supervision of UXO-qualified personnel. The responsible commander or authority may, based on a risk assessment and implementation of methods to mitigate any potential exposures, approve UXO Technician I personnel to perform escort duties without supervision.

C12.4.4.2.1.2. Within areas known or suspected to contain CA, regardless of configuration, to include areas where such CA is commingled with other MEC, by UXO-qualified personnel trained in CWM responses.

C12.4.4.2.2. Explosives safety requires that discovered surface MEC or CA, regardless of CA configuration, be avoided and their location noted and reported to appropriate authorities.

C12.4.4.2.3. Detected subsurface anomalies must not be investigated, but they shall be marked, when appropriate, and avoided.

C12.4.5. Frost Heave. This phenomenon occurs when three conditions are met: (a) freezing temperatures are present in the soil column; (b) the soil is frost susceptible; and (c) there is

sufficient moisture present in the soil to cause soil movement upon ice crystal formation. These three factors will be evaluated to assess the likelihood of frost heave moving residual MEC or CA, regardless of CA configuration, upward through the soil column. Where frost heave may have such an effect, explosives safety requires procedures be implemented to monitor the effectiveness of response actions for the affected area. (Other naturally occurring phenomena (e.g., erosion, tidal changes) could necessitate similar monitoring.)

C12.4.6. Soil Containing CA

C12.4.6.1. The criteria below apply to soil known to be contaminated with one or more of the following CA: mustard, L, GD, GA/GB, O-cyclohexyl Methylphosphono-fluoridate (GF) (common name is cylcosarin), or VX. This criteria applies only if a headspace measurement is at or above the Short Term Exposure Limits (STEL) (see subparagraph C12.4.6.4.1.) or a laboratory extraction sample is at or above the Hazardous Waste Control Limit (HWCL) for solid materials: mustard, L, GD, GA/GB, GF, or VX. Certain CA-related operations, such as taking core samples at a suspect CWM or CA burial site, require laboratory extraction sampling.

C12.4.6.2. Soil for which no evidence exists of CA contamination does not require treatment or remediation.

C12.4.6.3. An appendix to the site's Site Safety and Health Plan that addresses the procedures (e.g., personnel protection, monitoring, sampling, packaging, disposal) for the handling and disposition of CA-contaminated soil is required for environmental responses to soil known or suspected to be contaminated with CA.

C12.4.6.4. Air-sampling methods will be used to detect CA during CWM responses. When soil contaminated with CA is encountered and an air concentration is at or above the STEL based on off-gas monitoring of the headspace of a container or of air in the immediate area of the operation, appropriate personnel protective measures shall be employed and the CA-contaminated soil shall be decontaminated to below the HWCL levels of subparagraph C12.4.6.4.2. unless the CA-contaminated soil may be shipped per DOT regulations and approvals and a receiving Treatment Storage Disposal Facility (TSDF) is qualified to process the CA-contaminated soil per Federal, State, interstate, and local laws and regulations. If air monitoring is below the STEL, soil samples will be taken to determine if the soil exceeds the HWCL.

C12.4.6.4.1. The STELs for air sampling CA contamination are:

C12.4.6.4.1.1. 0.003 milligrams per cubic meter (mg/m^3) for mustard (H, HD, or HT) agent.

C12.4.6.4.1.2. 0.003 mg/m^3 for L.

C12.4.6.4.1.3. 0.0002 mg/m^3 for GD/GF.

C12.4.6.4.1.4. 0.0001 mg/m^3 for GA/GB.

C12.4.6.4.1.5. 0.00001 mg/m^3 for VX.

C12.4.6.4.2. When soil contaminated with CA is encountered at or above the HWCL levels listed in Table C12.T1. as determined by laboratory extraction and analysis of soil samples, the CA-contaminated soil shall be decontaminated to below the levels listed for the HWCL, or to a level required by Federal, State, interstate, and local laws and regulations.

Table C12.T1. Hazardous Waste Control Limits (HWCL)

Standard Name	Population	Exposure Scenario	Chemical Agent per Soil Mass (mg/kg)					
			GD/GF	GA	GB	VX	H, HD & HT	L
HWCL	Worker (Civilian/DoD)	Possible occasional exposure at hazardous waste treatment facility	52	680	320	10	6.7	37

C12.4.6.5. Once decontaminated to the appropriate level, the CA-contaminated waste must be packaged in a DoT-approved shipping container and shipped to an approved, licensed treatment or disposal facility per Federal, State, and local laws and regulations. Records of disposition must be maintained by the generator per Federal, State, interstate, and local laws and regulations.

C12.4.6.6. Soil that is found to be below the HWCL, but above the levels of subparagraph C12.4.6.7., shall be disposed of as hazardous waste per federal, state, interstate, and local laws and regulations or treated by an approved, licensed treatment or disposal facility to the levels of subparagraph C12.4.6.7.

C12.4.6.7. Soil that is at or below the Health-Based Environmental Screening Levels (HBESL) for residential or industrial soil listed in Table C12.T2., as appropriate, may be used or disposed of per federal, state, interstate, and local laws and regulations (e.g., returned to the hole or disposed of as non-contaminated, non-hazardous material).

Table C12.T2. Health-Based Environmental Screening Levels (HBESL)

Standard Name	Population	Exposure Scenario	Chemical Agent per Soil Mass (mg/kg)					
			GD/GF	GA	GB	VX	H, HD & HT	L
HBESL - Residential	General Population (adults and children)	Daily Exposure (lifetime)	0.22	2.8	1.3	0.042	0.01	0.3
HBESL - Industrial	General Adult Population	Frequent Exposures (250 days per year for 30 years)	5.2	68	32	1.1	0.3	3.7

C12.5. REQUIRED SAFETY SUBMISSIONS (ESS, CSS AND EXPLOSIVES OR CWM SITE PLANS)

C12.5.1. Explosives and CA safety requires:

C12.5.1.1. A DDESB-approved site plan, ESS, or CSS before the start of munitions response activities (e.g., field activities) that involve the placement of explosives on a site; the intentional physical contact with MEC or CA, regardless of CA configuration; or the conduct of ground-disturbing or other intrusive activities in areas known or suspected to contain MEC or CA, regardless of CA configuration; or

C12.5.1.2. A Service-level explosives safety office review and approval pending DDESB review and approval of the submission, provided the submission is at the DDESB for review and approval and the Service accepts that the DDESB approval may impose different or additional munitions or CWM response requirements.

C12.5.2. A DDESB-approved ESS or CSS, or an explosives or CWM site plan, or a combination thereof, is required for:

C12.5.2.1. MRS investigation or characterization (e.g., Engineering Evaluation/Cost Analysis (EE/CA) or Remedial Investigation/Feasibility Study (RI/FS)) that involve the intentional physical contact with MEC or CA, regardless of CA configuration (see subparagraph C12.5.4.).

C12.5.2.2. A determination of “No DoD Action Indicated” (NDAI) or “No Further Action” (NOFA) (see subparagraph C12.5.5.).

C12.5.2.3. Time Critical Removal Action (TCRA) (see subparagraph C12.5.6.).

C12.5.2.4. Construction support (see subparagraph C12.5.7.).

C12.5.2.5. Execution of the explosives safety or CA safety aspects of the selected response (see subparagraphs C12.5.8. and C12.5.9.)

C12.5.3. A DDESB-approved ESS or CSS, or an explosives or CWM site plan is not required for:

C12.5.3.1. Munitions or explosives emergency responses.

C12.5.3.2. Preliminary assessments or site inspections (e.g., site visits in conjunction with an archival search) when intentional physical contact with MEC or CA, regardless of CA configuration, or the conduct of ground-disturbing or other intrusive activities are not intended (see subparagraph C12.5.3.6.).

C12.5.3.3. Clearance activities on operational ranges. (Addressing military munitions burial sites on operational ranges is not a clearance activity.)

C12.5.3.4. Munitions responses on former ranges used exclusively for training with small arms ammunition.

C12.5.3.5. On-call construction support.

C12.5.3.6. Anomaly avoidance activities.

C12.5.4. MRS Investigation or Characterization. An explosives or, when appropriate, a CWM site plan is required for MRS investigations or characterizations that involve intentional physical contact with MEC or CA, regardless of CA configuration. Such site plans will address areas (e.g., magazines) used for the storage of commercial or military demolition explosives, MEC or CA, regardless of CA configuration; planned or established demolition or disposal areas; and the MRA, MRS, or response area boundaries. (See subparagraph C12.5.8.3.7.) MRS investigation and characterization are used to collect the information needed to design the required munitions response and to prepare, as appropriate, an ESS or CSS for the selected response.

C12.5.5. NDAI or NOFA ESS or CSS. When a NDAI or NOFA decision is made for an MRA or MRS or for a response area, an ESS or CSS must, at a minimum, provide:

C12.5.5.1. The site identification (e.g., name, unique identifier).

C12.5.5.2. The site location.

C12.5.5.3. Justification for the decision.

C12.5.6. TCRA ESS or CSS. To expedite the approval process, DoD Components are encouraged to submit TCRA ESS or CSS electronically through their chain of command to the DDESB. A TCRA ESS or CSS must, at a minimum, identify or provide:

C12.5.6.1. The site identification (e.g., name, unique identifier).

C12.5.6.2. The TCRA's location.

C12.5.6.3. The TCRA's purpose, in sufficient detail to explain the reason the TCRA was authorized.

C12.5.6.4. The estimated date that the TCRA will be:

C12.5.6.4.1. Initiated.

C12.5.6.4.2. Completed.

C12.5.6.5. The munition with the greatest fragmentation distance (MGFD)

C12.5.6.6. ESQD maps (see subparagraph C12.5.8.3.7.) that show the minimum separation distances for:

C12.5.6.6.1. The removal area within an MRA or MRS or within a response area for:

C12.5.6.6.1.1. Unintentional detonations (see subparagraph C12.5.8.3.2.1.).

C12.5.6.6.1.2. Intentional detonations (see subparagraph C12.5.8.3.2.2.).

C12.5.6.6.2. Areas or magazines for the storage of demolition explosives, MEC, or CA, regardless of CA configuration.

C12.5.6.7. Actions and controls to be implemented (e.g., surface removal, evacuation, fences) as part of the TCRA.

C12.5.6.8. DDESB-approved engineering controls (see Reference (j)) to be used, if any.

C12.5.6.9. A point of contact for additional information.

C12.5.7. Construction Support ESS or CSS. A safety submission is required for construction support where the probability of encountering MEC or CA, regardless of CA configuration, is considered moderately or highly probable. This submission must provide the information outlined in paragraphs C12.5.8. and C12.5.9., as appropriate. The information may be tailored based on site-specific conditions.

C12.5.8. Selected Munitions Response ESS. The below information is required in an ESS for the execution of the selected munitions response to address MEC. When CA, regardless of configuration, is known or suspected to be present along with explosive hazards, or when it is explosively configured, a submission that provides both explosives safety (as outlined in this section) and CA safety information (see paragraph C12.5.9.) is required.

C12.5.8.1. Background. The ESS must provide, for informational purposes, a brief description of the reasons for the munitions response. The ESS must identify or provide:

C12.5.8.1.1. The scope of munitions response activities.

C12.5.8.1.2. Any significant differences in munitions response activities that will occur within the MRA or MRS. (NOTE: The ESS must identify significant differences in the current, determined, or reasonably anticipated future land use of different sections of the property, significant differences in the types or conditions of MEC expected to be encountered, and any sections of the MRA that will not require munitions response activities.)

C12.5.8.2. Maps. The following maps and related information must be furnished:

C12.5.8.2.1. Regional Map. A map depicting the regional location of the MRA or MRS (e.g., a state or boundary illustration map with the MRA indicated on it).

C12.5.8.2.2. MRA or MRS Maps. Maps of the area or areas at which the munitions response is planned. These maps and related information shall indicate:

C12.5.8.2.2.1. Areas that:

C12.5.8.2.2.1.1. Contain or are suspected of containing MEC that the ESS addresses.

C12.5.8.2.2.1.2. Were suspected of containing MEC, but that research or site characterizations have subsequently shown do not contain such.

C12.5.8.2.2.1.3. The ESS does not address, but that either a previous safety submission addressed or a future safety submission will address.

C12.5.8.2.2.2. The current, determined, or reasonably anticipated future land use of property within the MRA or MRS that is known or suspected to contain MEC that the ESS addresses.

C12.5.8.2.2.3. The ownership and land use of adjacent properties, as appropriate.

C12.5.8.2.2.4. Any other situation that may influence or require consideration during the response (e.g., flight corridors, traffic routes).

C12.5.8.3. ESQD

C12.5.8.3.1. The planned locations for MEC response-related operations must be shown on ESQD maps. (NOTE: Preliminary site work, such as surveying, laying search lanes, and detecting anomalies does not require establishment of an ESQD arc.)

C12.5.8.3.2. ESQD arcs for both intentional and unintentional detonations must be established and shown on ESQD maps for each MRS.

C12.5.8.3.2.1. The Minimum Separation Distance (MSD) for unintentional detonations, which may be reduced by employing the engineering controls listed in Reference (j) or other DDESB-approved engineering controls, for:

C12.5.8.3.2.1.1. Nonessential personnel is the greatest distance of:

C12.5.8.3.2.1.1.1. Blast overpressure, as computed by using the formula: $D = 40W^{1/3}$ [$D=15.87Q^{1/3}$].

C12.5.8.3.2.1.1.2. The calculated HFD as provided in Reference (p).

C12.5.8.3.2.1.2. Team Separation Distance (TSD) is based on blast overpressure, as computed by the formula: $D = 40W^{1/3}$ [$D=15.87Q^{1/3}$].

C12.5.8.3.2.2. The MSD for intentional detonations (see Chapter 9), which may be reduced by employing the engineering controls listed in Reference (j) or other DDESB-approved engineering controls, is the greatest distance of:

C12.5.8.3.2.2.1. Blast overpressure, as computed by using the formula: $D = 328W^{1/3}$ [$D=130.16Q^{1/3}$].

C12.5.8.3.2.2.2. The calculated MFD, as provided in Reference (p).

C12.5.8.3.3. MEC, Excluding CA-filled Munitions, Hazard Classification, and Storage

C12.5.8.3.3.1. Recovered MEC, other than Recovered CWM (RCWM), shall be managed as HD 1.1, unless assigned differently by an Interim Hazard Classification (IHC) authority, and assigned an appropriate CG. When storage at the MRA or MRS is necessary, recovered MEC must be stored separately from serviceable munitions and from any RCWM. (NOTE: For RCWM, see subparagraph C12.5.9.6.)

C12.5.8.3.3.2. Nonessential personnel in structures shall be afforded protection equivalent to IBD from storage locations. Nonessential personnel in the open shall be afforded protection equivalent to PTRD from storage locations. (See Chapter 9.) There is no required ESQD protection for essential personnel from locations they are using for storage.

C12.5.8.3.3.3. The IMD, based on the NEWQD of the munition with the greatest NEWQD that is reasonably expected to be encountered, applies from intrusive operations to storage sites to prevent propagation to a storage location in event of an accidental explosion during intrusive operations. For distances less than IMD, DDESB-approved engineering controls must be used during intrusive operations.

C12.5.8.3.4. Planned or Established Demolition Areas. A planned or established demolition area is an area used repetitively to destroy munitions during a munitions response. (Such areas may be an existing OD area or a new area planned for intentional detonation.) An ESQD arc must be provided around demolition areas. The size of the ESQD arc will be based on requirements of this Standard (see Chapter 9).

C12.5.8.3.5. Mechanized MEC, Excluding CA-filled Munitions, Processing Operations. Examples of such processing operations include, but are not limited to: power screening equipment, power rakes, and shredders.

C12.5.8.3.5.1. Nonessential Personnel. Nonessential personnel shall be provided protection for intentional detonations (see subparagraph C12.5.8.3.2.2.) based on the MGFD.

C12.5.8.3.5.2. Essential Personnel. Essential personnel shall, when appropriate:

C12.5.8.3.5.2.1. Be protected by shields or barricades designed to defeat hazardous fragments from the MGFD.

C12.5.8.3.5.2.2. Be separated from the operation by K24 based on the munition with the greatest NEWQD that is reasonably expected to be encountered. (NOTE: DDESB-approved overpressure-mitigating engineering controls may be used to provide an equivalent level of protection (2.3 psi) [15.9 kPa]).

C12.5.8.3.6. Intentional Burning of Buildings Contaminated with Explosives Residues that Present an Explosive Hazard. All personnel shall be separated by K328 overpressure distance based on the MCE for the building, but not less than 1,250 feet.

C12.5.8.3.7. ESQD Maps. (NOTE: The ESQD arcs and the MRA and MRS boundaries may be shown on the same map provided all PES and ES are shown in sufficient detail.)

C12.5.8.3.7.1. ESQD-maps should be to scale and legible per subparagraph C5.4.4.3.2.

C12.5.8.3.7.2. When a map does not contain a scale, all distances must be labeled.

C12.5.8.3.7.3. The ESQD map shall show the following:

C12.5.8.3.7.3.1. Each MRA or MRS.

C12.5.8.3.7.3.2. The storage locations for demolition explosives and for recovered MEC.

C12.5.8.3.7.3.3. Locations (planned or established) for the intentional detonations or burning of MEC, excluding CA-filled munitions. Such locations include areas where contained detonation technology will be used.

C12.5.8.3.7.3.4. All ES and PES and their relationships. (NOTE: Describe any protective measures (e.g., evacuation of inhabited buildings, blocking off public highways) that will be used to eliminate or minimize any exposures within the established exclusion zone.)

C12.5.8.3.7.3.5. All controlling ESQD arcs.

C12.5.8.3.7.4. ESQD Arcs. ESQD arcs must be shown for:

C12.5.8.3.7.4.1. Munitions. The MGFD shall be used for ESQD purposes for any particular MRA or MRS. However, if a munition with a greater fragmentation distance is encountered during the conduct of a munitions response, the ESQD arcs must be adjusted and the ESS or explosives safety site plan must be amended.

C12.5.8.3.7.4.2. Explosive Soil. To determine the ESQD arc for explosive soil, calculate the MCE by multiplying the weight of the mix by the concentration of explosives (e.g., 1,000 lb [453.60 kg] of soil containing 15 percent TNT has an MCE of 150 lb [68 kg]). When concentrations vary within the site, weighted averages or other valid mathematical technique can be used to determine the exclusion zone; however, the ESS must support their use. The MSD for nonessential personnel shall be the greater of IBD for overpressure or the soil ejecta radius per the Buried Explosion Module (BEM) contained in Reference (p) or other DDESB-approved procedures (see Reference (j)).

C12.5.8.3.7.4.3. Real Property (Buildings and Installed Equipment). For real property that is known or suspected to be contaminated with explosives residues that present an explosive hazard, and that is slated for cleanup or dismantlement, the MCE will be estimated on a case-by-case basis. The ESS shall include the rationale used for the estimation.

C12.5.8.3.8. Soil Sampling Maps. When the property involves concentrations of explosives in the soil that are high enough to present an explosive hazard (see subparagraph C12.4.1.):

C12.5.8.3.8.1. Provide a map that indicates areas that were determined to contain explosive soil.

C12.5.8.3.8.2. Address methods (e.g., blending, bio-remediation) to be used to reduce explosives concentrations to a non-reactive level.

C12.5.8.3.8.3. Address methods (e.g., wetting the soil before blending) to be used to reduce any explosive hazards.

C12.5.8.4. Types of MEC. Based on research or data generated from characterization of the MRA or MRS, provide the types of MEC expected to be encountered during munitions response activities.

C12.5.8.5. Start Date. Provide the expected date that munitions response activities that involve the placement of explosives on a site, the intentional physical contact with MEC, or the conduct of ground-disturbing or intrusive activities in areas known or suspected to contain MEC are scheduled to start. Indicate the potential consequence, if any, if DDESB approval does not occur by the start date. (Site preparation activities (e.g., surveying, gridding, or locating anomalies) may be conducted while awaiting DDESB approval of an ESS.)

C12.5.8.6. MEC Migration. Describe naturally occurring phenomena (e.g., drought, flooding, erosion, frost heave, tidal changes) that could cause the migration or exposure of MEC, and procedures for monitoring and managing such.

C12.5.8.7. Detection Equipment and Response Techniques. The intent of this section is to describe the capabilities of detection equipment relative to the degree of removal required to support the current, determined, or reasonably anticipated end use.

C12.5.8.7.1. Describe the techniques to be used to detect and remove MEC.

C12.5.8.7.2. Identify the types of detection equipment to be used and the areas in which they will be employed.

C12.5.8.7.3. Summarize methods used (e.g., test plots) to establish the expected detection capabilities of the equipment used. If anomaly discrimination will be used, explain what methods will be used to establish the expected accuracy of the discrimination.

C12.5.8.7.4. When describing the detection methods:

C12.5.8.7.4.1. Describe the rationale (e.g., best available technology based on geology, topography, munitions characteristics, resource requirements) used to select the detection methods and technologies to be used during the response.

C12.5.8.7.4.2. Address any limitations (e.g., equipment, terrain, soil type) and mitigating actions, if any.

C12.5.8.7.4.3. Describe quality assurance and quality control (QA/QC) standards and pass or fail criteria for QA/QC control audits.

C12.5.8.8. Disposition Techniques

C12.5.8.8.1. MEC, Excluding CA-Filled Munitions

C12.5.8.8.1.1. Briefly, describe the MEC, excluding CA-filled munitions, disposition techniques (e.g., OB, OD, contained detonation, incineration) to be used.

C12.5.8.8.1.2. When recovered MEC, excluding CA-filled munitions, cannot be destroyed within the MRA or MRS, address how explosives safety requirements will be met during transportation and during offsite storage, treatment, or disposal. (NOTE: Disposition actions should consider requirements applicable to waste military munitions.)

C12.5.8.8.2. Material Potentially Presenting an Explosive Hazard (MPPEH). Describe the process to be used to manage MPPEH (see Chapter 16).

C12.5.8.9. Environmental, Ecological, Cultural and Other Considerations. Address any environmental, ecological (e.g., endangered species), cultural (e.g., tribal spiritual or gathering sites) and other factors that impacted, from an explosives safety perspective, the selection of the munitions response.

C12.5.8.10. Technical Support. Summarize EOD, U.S. Army Forces Command/20th Support Command/22nd Chemical Battalion, or UXO-technician or UXO-qualified personnel support that may be required. (NOTE: U.S. Army Forces Command/20th Support Command/ 22nd Chemical Battalion is manned with specially trained personnel that provide verification,

sampling, detection, mitigation, render safe, decontamination, packaging, escort, and remediation of chemical, biological and industrial devices or hazardous materials.)

C12.5.8.11. Residual Risk Management. Address:

C12.5.8.11.1. LUC. The ESS must summarize any LUC to be implemented and maintained on the property.

C12.5.8.11.2. Long-Term Management. The ESS must address how any potential residual risks will be managed.

C12.5.8.12. Safety Education Program. Address methods to be used to educate the public on the risks associated with MEC and CA, regardless of CA configuration.

C12.5.8.13. Stakeholder Involvement. Briefly, summarize how stakeholder concerns affecting the explosives safety aspects of the selected munitions response were addressed.

C12.5.8.14. Contingencies. To reduce the need to submit amendments (see subparagraph C12.6.1.), an ESS may describe alternative actions that could be used to address contingencies. As an example, an ESS may list alternative DDESB-approved engineering controls (see Reference (j)) that may be used under specified conditions.

C12.5.8.15. Unexpected CA Discoveries. Should CA, regardless of its configuration, be discovered during munitions responses to MEC, excluding CA-filled munitions, all onsite activities shall be halted until the need for a CWM response is evaluated and a decision is approved by the Service-level explosives safety office. If it is decided that a CWM response is necessary, response actions that involve the intentional physical contact with CA, regardless of configuration, or the conduct of ground-disturbing or other intrusive activities in areas known or suspected to contain CA shall not begin until the required CSS or CWM site plan is approved by the DDESB.

C12.5.9. Selected CWM Response CSS and CWM Site Plans

C12.5.9.1. General

C12.5.9.1.1. A response in an area (e.g., a munitions response in an MRA or MRS) that is known or suspected to contain CA, regardless of configuration, must include a CWM site plan for an Interim Holding Facility (IHF) and, when the use of onsite destruction technology is planned, for the site at which those destruction activities will occur. Generally, the information required in a CSS parallels that for an ESS (see subparagraph C12.5.8.); however, such information will be tailored to address CWM.

C12.5.9.1.2. A CSS is not required for certain activities on a site with a history of CA-related activities when an installation or district commander, or a command-designated representative, has approved a probability assessment finding for such activities stating that the probability of discovering CA is expected to be “seldom” or “unlikely.” However, the site safety

and health plan must include contingency plans providing for the safe and expeditious evacuation of the site in the event CA is discovered. Should CA, regardless of configuration, be discovered during these activities, all onsite activities shall be halted until the need for a CWM response is evaluated and a decision is approved by the Service-level explosives safety office. If it is decided that a CWM response is necessary, response actions that involve the intentional physical contact with CA, regardless of configuration, and/or the conduct of ground-disturbing or other intrusive activities in areas known or suspected to contain CA shall not begin until the required CSS or CWM site plan is approved by the DDESB.

C12.5.9.2. Explosives Hazards. When explosives hazards are known or suspected to exist along with CA hazards within a response area (e.g., the MRA or MRS), a submission that addresses both explosives safety (see subparagraph C12.5.8.) and CA safety (as outlined in this section) is required.

C12.5.9.3. Background. (See subparagraph C12.5.8.1.)

C12.5.9.4. Maps. The maps provided with a CSS must meet the requirements of subparagraph C12.5.8.2. In addition, the One Percent Lethality Distance and the IBD shall be shown.

C12.5.9.5. Chemical Agent Hazards. When CA hazards are known or suspected to exist within a response area (e.g., the MRA or MRS), the CA downwind hazard must be considered when determining the MSD. The CSS shall provide the following information:

C12.5.9.5.1. A description of the CA MCE.

C12.5.9.5.2. A description of how essential and nonessential personnel and the public will be protected should the CA MCE occur (see Chapter 11 for basic personnel protection requirements (e.g., hazard zones and protective equipment) for operations involving CWM). If an Engineering Control (EC), which has not been DDESB-approved, is to be used to provide such protection, the CSS must include the technical data substantiating the new engineering control's effectiveness. EC may be used for:

C12.5.9.5.2.1. Protection from overpressure and fragments when explosively configured CWM are known or suspected.

C12.5.9.5.2.2. Protection from CA effects (prevent vapor releases to the environment) during both response activities and when RCWM is stored in the IHF.

C12.5.9.6. RCWM Hazard Classification and Storage

C12.5.9.6.1. RCWM, suspected or confirmed, regardless of its configuration, must be stored separately from serviceable munitions and from other MEC. Additionally, suspect RCWM shall be stored separately from all other munitions and from RCWM.

C12.5.9.6.2. Suspect and known RCWM shall be managed as HD 1.1 until stowed in an approved overpack container or until determined not to be RCWM (see subparagraph C12.5.8.3.3) or to be non-explosively configured RCWM (see subparagraph C12.5.9.6.4.). (NOTE: The CA downwind hazard must be considered, with the greater of the two distances used for siting purposes.)

C12.5.9.6.3. Explosively-configured RCWM in an approved overpack container shall be managed as HD 1.2.1 with an explosive MCE of one round or HD 1.2.2, based on its NEWQD. Such storage may be considered HD 1.1 if advantageous for computing HFD using DDESB-approved procedures (see Reference (p)). (The CA downwind hazard must be considered, with the longer of the two distances used for siting purposes.)

C12.5.9.6.4. Non-explosively configured RCWM shall be managed as HD 6.1. (The CA downwind hazard must be used for siting purposes.)

C12.5.9.7. CWM Site Plan. A DDESB-approved CWM Site Plan for an IHF is required when CA, regardless of configuration, is known or suspected to exist on a response area. The IHF Site Plan, which is based on the worst-case CA configuration expected to be encountered, is included in the CSS. The IHF site plan shall:

C12.5.9.7.1. Identify the public access exclusion distance (PAED).

C12.5.9.7.2. Identify all associated ESQD arcs (see subparagraph C12.5.8.3.).

C12.5.9.7.3. Address the evacuation procedures for personnel within the PAED.

C12.5.9.7.4. Address any security measures and access controls for the IHF.

C12.5.9.7.5. Address any EC that will be used to mitigate a CA release during IHF activities, such as:

C12.5.9.7.5.1. Static storage within the IHF.

C12.5.9.7.5.2. RCWM assessment activities (e.g., X-ray, portable isotopic neutron spectroscopy (PINS)).

C12.5.9.7.5.3. Transportation preparation activities (e.g., transloading of multiple round containers (MRCs), MRC movement into or out of the IHF).

C12.5.9.7.6. Address soil sampling maps. (See subparagraph C12.5.8.3.8.).

C12.5.9.7.7. Address types of CA. (See subparagraph C12.5.8.4.).

C12.5.9.7.8. Address start date. (See subparagraph C12.5.8.5.).

C12.5.9.8. Detection Equipment and Response Techniques. (See subparagraph C12.5.8.7.)

C12.5.9.9. Disposition Techniques

C12.5.9.9.1. CA, Regardless of Configuration

C12.5.9.9.1.1. Briefly, describe the disposition techniques (e.g., onsite destruction) to be used.

C12.5.9.9.1.2. When RCWM cannot be destroyed on site, address how CA safety and, if applicable, explosives safety requirements, will be met during transportation and during offsite storage, treatment or disposal. (Disposition actions should consider guidance applicable to waste military munitions.)

C12.5.9.9.2. MPPEH. Describe the process to be used to manage MPPEH. (See Chapter 16.)

C12.5.9.10. Environmental, Ecological, Cultural, and Other Considerations. (See subparagraph C12.5.8.9.).

C12.5.9.11. Technical Support. (See subparagraph C12.5.8.10.).

C12.5.9.12. Residual Risk Management. (See subparagraph C12.5.8.11.) .

C12.5.9.13. Safety Education Program. (See subparagraph C12.5.8.12.).

C12.5.9.14. Contingencies. (See subparagraph C12.5.8.14.).

C12.5.9.15. Unexpected MEC or Explosively Configured CWM Discoveries. Should unexpected MEC or explosively configured CWM be discovered during a CWM response, all onsite activities that involve intentional physical contact with such MEC or explosively configured CWM, or the conduct of ground-disturbing or other intrusive activities in areas known or suspected to contain such MEC or explosively configured CWM, shall be halted until the newly identified explosive hazards are evaluated and the DDESB approves all required CSS amendments or explosives site plans.

C12.6. AMENDMENTS AND CORRECTIONS

An amendment or correction to an approved ESS or CSS does not require the resubmission of the complete ESS or CSS package. However, the information submitted must be in sufficient detail to identify the specific ESS or CSS being amended or corrected, the affected portions, and the precise amendments or corrections.

C12.6.1. Amendments. Amendments are only required when a change to an approved ESS or CSS increases explosives safety or CA risks, identifies requirements for additional or increased explosive or CA hazard controls, or increases or decreases an ESQD arc.

C12.6.1.1. An amendment requires DDESB approval before the affected response actions can continue. However, response actions need not be stopped pending such approval provided:

C12.6.1.1.1. The amendment pertains to an area (e.g., MRA or MRS) for which an ESS or CSS has already been approved; and,

C12.6.1.1.2. The DoD Component:

C12.6.1.1.2.1. Institutes protective measures (e.g., increased ESQD, use of DDESB-approved EC) to address any explosive or CA hazards.

C12.6.1.1.2.2. Accepts the possibility that the DDESB approval process may impose different or additional explosives safety or CA safety requirements.

C12.6.1.2. If the amendment is for a new response area (e.g., a new MRS), then the DDESB must approve the amendment before intrusive activities begin in the new response area.

C12.6.1.3. To allow the response to continue with minimal interruption, amendments should be processed by electronic means.

C12.6.1.4. Changes that require an amendment include:

C12.6.1.4.1. Constraints in funding, technology, access, and other site-specific conditions that impact the degree of removal addressed in the approved ESS or CSS.

C12.6.1.4.2. Any increase or decrease of the ESQD arcs.

C12.6.1.4.3. A change in operations requiring explosives siting or re-siting of an IHF for CWM.

C12.6.1.4.4. Changes in LUC or long-term management to address residual risks. Such changes would not require intrusive activities to stop while the amendment is being processed.

C12.6.2. Corrections. Corrections address changes to an approved ESS or CSS that do not increase explosives safety or CA risks or exposures. Corrections:

C12.6.2.1. Do not require approval.

C12.6.2.2. Are primarily administrative in nature and provided for information purposes.

C12.7. AAR

C12.7.1. An AAR for completed munitions or CWM responses is a required feature of all DDESB-approved ESS or CSS. The AAR's purpose is to document that the explosives and chemical safety aspects of the selected response have been completed per the approved ESS or CSS. In most cases, a "Statement of MEC Removal" or "Statement of Munitions Response MEC Removal Actions" fulfills the requirements in subparagraph C12.7.5. The DDESB Staff shall acknowledge receipt of an AAR, and raise any issues that require resolution before land transfer or an alternative use can safely proceed.

C12.7.2. The AAR:

C12.7.2.1. Shall be submitted to the DDESB through the responsible DoD Component.

C12.7.2.2. May be submitted electronically.

C12.7.2.3. Will remain part of the DDESB's action file; however, DoD Components continue to be responsible for complying with all recordkeeping requirements.

C12.7.2.4. Shall summarize the MEC or CA, regardless of CA configuration, found.

C12.7.2.5. Shall describe the relative effectiveness and any limitations of the technologies used during the munitions response or CWM response and the effects on residual risk relative to that originally projected.

C12.7.2.6. Shall include maps showing:

C12.7.2.6.1. Areas from which MEC or CA, regardless of CA configuration, was removed.

C12.7.2.6.2. Areas within a response area (e.g., within a MRA or MRS) where response actions were not performed and the rationale for not addressing those areas.

C12.7.2.6.3. The known or reasonably anticipated end use of each area.

C12.7.2.7. Shall summarize the LUC that were implemented, if any, and the areas to which they apply.

C12.7.2.8. Shall address provisions for long-term management.

C12.8. TRANSFER OF REAL PROPERTY OUTSIDE OF DoD CONTROL

Pursuant to DoD guidance on real property disposal, real property known to contain or suspected of containing explosive or CA hazards may not be transferred out of DoD control (other than to

the Coast Guard) until the Chairman, DDESB, has approved measures submitted by the transferring Component to ensure the recipient of the property is fully informed of both the actual and potential hazards relating to the presence or possible presence of explosives or CA, and restrictions or conditions placed on the use of the property to avoid harm to users due to the presence of explosives or CA.

C12.8.1. Notices. A recipient of such DoD property shall be provided:

C12.8.1.1. Details of any past removal or remedial actions, including:

C12.8.1.1.1. The degree of MEC or CA removal.

C12.8.1.1.2. The process used to determine that degree of removal to be adequately protective.

C12.8.1.2. Written notification that detection and removal methods are not 100 percent effective, and that residual hazards may remain in areas (e.g., MRS) that were subjected to response actions.

C12.8.2. Restrictions and Conditions. Based on potential explosive and CA hazards present and the projected use of the property, the following types of use restrictions and conditions shall be imposed, as appropriate, on such DoD property:

C12.8.2.1. A prohibition on excavation or drilling in any areas known or suspected to contain MEC or CA, regardless of CA configuration, without appropriate permits or assistance.

C12.8.2.2. A prohibition on disturbing, removing, or destroying any found MEC or CA, regardless of CA configuration.

C12.8.2.3. A requirement to immediately notify local law enforcement representatives of any discovery of MEC or CA, regardless of configuration.

C12.8.2.4. A prohibition on the construction or installation of particular improvements including utilities, roadways, airstrips, navigable waterways, pipelines, and structures, both above and below ground.

C12.8.2.5. A prohibition on specific alterations, extensions, or expansions to such improvements.

C12.8.2.6. A prohibition on certain types of uses, such as child care centers, housing, or farming.

C12.8.2.7. A restriction to a specific type of use or owner, such as a state National Guard range.

C12.8.2.8. Inclusion of DoD Component explosives and CA safety personnel and the Chairman, DDESB, in deliberations, decision making, and approvals pertaining to future munitions response activities to address MEC or CA, regardless of CA configuration.

C12.8.2.9. Inclusion of the restrictions and conditions in the recorded land records for the jurisdiction, to the extent allowed by state law.

C13. CHAPTER 13
ACCIDENT NOTIFICATION AND REPORTING REQUIREMENTS

C13.1. SCOPE

C13.1.1. Enclosure 5 to DoD Instruction 6055.7 (Reference (aj)) identifies the accidents that shall be reported to the DDESB. Accident notifications and reports shall be prepared in accordance with implementing regulations to Reference (aj). This reporting requirement has been assigned Report Control Symbol (RCS) DD-AT&L(AR)1020 in accordance with Reference (b).

C13.1.2. This Chapter sets forth the minimum data that shall be included in accident notifications and reports submitted to the DDESB. Submit any missing data in subsequent reports.

C13.1.3. Accidents reported to the DDESB need not be reported separately to the Assistant Deputy Under Secretary of Defense (Environment, Safety & Occupational Health) (ADUSD(ESOH)) under the special reporting requirements of Enclosure 3 to Reference (aj).

C13.1.4. Regardless of format, accident notifications and reports that are prepared in compliance with DoD Component criteria may be used to satisfy these requirements when they contain similar data.

C13.1.5. All accident notifications, reports, and data submitted pursuant to this Chapter shall be reviewed by the cognizant claims officer prior to submittal to ensure the notification or report does not contain unsupported admissions or speculation that could cause harm to the Government.

C13.1.6. These notice and reporting requirements are in addition to, and not in place of, those required by applicable federal, state, interstate, and local laws and regulations.

C13.1.7. All information accumulated pursuant to this Chapter will be collected, maintained, and utilized in compliance with DoD 5400.11-R (Reference (ak)).

C13.2. SECURITY CLASSIFICATION

Accident notifications and reports should be unclassified when possible to ease dissemination of safety information to the DoD Components, industry, and friendly governments.

C13.3. ACCIDENT NOTIFICATION REQUIREMENTS

The DoD Component shall provide the following data as soon as practical:

C13.3.1. Name and location of the reporting activity.

C13.3.2. Location of accident (activity, city, installation, building number or designation, road names, or similar information).

C13.3.3. Item nomenclature or description (e.g., Mark (Mk), model, Federal Supply Class (FSC), National Identification Number (NIN), Department of Defense Ammunition Code (DoDAC), Navy Ammunition Logistic Code (NALC), or Ammonium Nitrate/Fuel Oil (ANFO)).

C13.3.4. Quantity involved (number of items and NEWQD).

C13.3.5. Day, date, and local time of initial significant event and when discovered.

C13.3.6. Narrative of the event (include type of operation involved).

C13.3.7. Number of fatalities (military, DoD civilian, or other civilian).

C13.3.8. Number of persons injured (military, DoD Civilian, or other civilian).

C13.3.9. Description of material damage (government or non-government).

C13.3.10. Immediate action taken or planned (corrective, investigative, or EOD assistance).

C13.3.11. Details of any chemical agent hazard or contamination, if applicable.

C13.3.12. Description of news media attention.

C13.4. ACCIDENT REPORTS

In addition to the Accident Notification data, when accident investigations are concluded, the following accident reporting data, as applicable, shall be provided to the DDESB. Chemical agent accidents shall also require the inclusion of the data specified in section C13.5.

C13.4.1. Event Circumstances. Type of operation or transportation mode engaged in at time of the accident (include reference to applicable standing operating procedure or regulatory document).

C13.4.1.1. Description of accident.

C13.4.1.2. Quantity, type, lot number, configuration, and packaging of AE or chemical agents involved in accident.

C13.4.1.3. Type of reaction or reactions.

C13.4.1.3.1. Single reaction, such as detonation, deflagration, fire, release, or activation.

C13.4.1.3.2. Multiple reaction, such as detonation and fire.

C13.4.1.3.3. Communication of reactions, such as fire-caused fire, fire-caused detonation, and detonation-caused detonation, and the time between events.

C13.4.1.4. Possible or suspected causes.

C13.4.2. Event Effects. A copy of aerial and ground photographs taken of the accident site shall be submitted to the DDESB as soon as possible after the occurrence. When applicable, include photographs (color, whenever possible), maps, charts, and overlays, showing or listing the following data:

C13.4.2.1. Number of persons killed or injured (military, DoD civilian, or other civilian). Indicate cause of fatalities and injuries, and location of affected persons with respect to the accident origin.

C13.4.2.2. Property damage at the accident origin (government or non-government).

C13.4.2.3. Area containing property with complete destruction.

C13.4.2.4. Area containing property damage beyond economical repair.

C13.4.2.5. Area containing repairable property damage.

C13.4.2.6. Radii of glass breakage. When possible, include type and dimensions of glass broken at farthest point.

C13.4.2.7. Locations and dimensions of craters.

C13.4.2.8. When direct propagation has occurred, identify distances from the accident origin and whether propagation resulted from blast, fragments, or firebrands.

C13.4.2.9. Approximate number, size, and location of hazardous fragments and debris.

C13.4.2.10. Effect on production, operation, mission, or other activity.

C13.4.3. Factors Contributing to or Limiting Event Effects. When applicable, describe the influence of the following factors on the accident:

C13.4.3.1. Environmental and meteorological conditions (e.g., lightning, cloud cover, wind direction and velocity, temperature, relative humidity, EMR, and electrostatic buildup or discharge).

C13.4.3.2. Topography (e.g., hills, forests, and lakes).

C13.4.3.3. Structural features at the accident origin (e.g., exterior and interior walls and bulkheads, roofs and overheads, doors and hatches, cells or magazines, earth cover, and barricades).

C13.4.3.4. Safety features, other than structural, at the accident origin (e.g., remote controls, sprinkler or deluge systems, detectors, alarms, blast traps, and suppressive shielding).

C13.4.4. Structures. When applicable, provide position, orientation, and type of construction of all structures, damaged or not, located within the maximum radius of damage or the applicable QD, whichever is greater.

C13.4.5. Vessels, Vehicles, and Mobile Equipment. When applicable, provide their location within the maximum radius of damage, or the applicable QD requirement, whichever is greater.

C13.4.6. Personnel. When applicable, provide their location within the maximum radius of damage, or the applicable QD requirements, whichever is greater.

C13.4.7. AE and Chemical Agents. When applicable, provide the location, type, configuration, and amounts of AE and chemical agents in adjacent locations, and describe the protection provided by structures at adjacent locations. This information is required out to the maximum radius of damage to any AE or chemical agents, or the applicable IMD or ILD requirements, whichever is greater.

C13.4.8. Report. Provide analyses, conclusions, and recommendations.

C13.5. CHEMICAL AGENT ACCIDENTS

In addition to the data required by section C13.4., for AE accidents, each chemical agent accident report shall contain the following information.

C13.5.1. Personnel

C13.5.1.1. Chemical agent safety training received.

C13.5.1.2. The availability, type, and use of protective equipment.

C13.5.1.3. A description of the emergency measures taken or performed at the scene of the accident.

C13.5.1.4. A summary of applicable medical data.

C13.5.1.5. A diagram showing locations where injuries occurred and indicating the distance and direction from the agent source.

C13.5.2. Accident Area. In addition to the environmental and meteorological data required at the accident site by subparagraph C13.4.3.1., provide the following:

C13.5.2.1. Facility filter types and the facility ventilation and air turnover rates.

C13.5.2.2. Rate and manner of agent release and any other data used to determine the downwind hazard.

C13.5.2.3. Status and disposition of any chemical agent remaining at the accident site.

C13.5.2.4. Details of any remaining chemical agent hazard and contamination, if applicable.

C14. CHAPTER 14
SPECIAL STORAGE PROCEDURES FOR WASTE MILITARY MUNITIONS

C14.1. SCOPE AND APPLICABILITY

C14.1.1. The Environmental Protection Agency (EPA) promulgated the Munitions Rule (MR), Subpart M of Part 266, title 40, CFR (Reference (al)) to define when chemical and conventional military munitions become a solid or hazardous waste and to provide for the safe storage and transportation of such waste. The MR takes precedence over these Standards. The MR sets forth two approaches for the storage of waste military munitions:

C14.1.1.1. A Conditional Exemption (CE) from certain "Resource Conservation and Recovery Act (RCRA)" (Reference (am)) requirements.

C14.1.1.2. A new RCRA storage unit standard (i.e., Subpart EE of Parts 264 and 265 of 40 CFR (Reference (an))).

C14.1.2. This chapter establishes additional requirements for storage of waste military munitions in the U.S.

C14.2. WAIVERS AND EXEMPTIONS

C14.2.1. CE Storage. Waivers and exemptions from this Standard are not authorized for AE storage facilities (hereafter designated as an ASU) storing CE waste military munitions.

C14.2.2. RCRA Storage. Waivers and exemptions from this Standard shall only be available to DoD Components storing waste munitions under RCRA unit standards (e.g., Subpart EE of Part 264 of 40 CFR (Reference (an))). The approval authority for these waivers and exemptions is the Secretary of the Military Department, who may delegate the authority no lower than an assistant secretary.

C14.3. REQUIREMENTS FOR STORAGE OF WASTE MILITARY MUNITIONS UNDER CE

C14.3.1. The DoD Components shall ensure that waste military munitions stored under CE comply with 40 CFR 266.205(a) (Reference (an)). (The MR-established CE does not apply to toxic chemical agents or toxic chemical munitions.)

C14.3.2. The DoD Components shall ensure that installations and responsible activities:

C14.3.2.1. Maintain records of stored waste military munitions for a minimum of 3 years from the date they were last stored. The records must be distinguished by type. A separate record or line item is required for each type of munition in any mixed lot of munitions received for storage. The record shall include the following:

C14.3.2.1.1. The type of waste military munitions stored by standard nomenclature, Lot Number, FSC, National Stock Number (NSN), DoDAC, and condition code.

C14.3.2.1.2. The quantity stored.

C14.3.2.1.3. The date identified as "waste."

C14.3.2.1.4. The date they left storage.

C14.3.2.1.5. The storage location or locations (e.g., building number or storage pad, and grid coordinates) where they were stored.

C14.3.2.1.6. The means (e.g., destroyed, demilitarized, and shipped) and date of disposition.

C14.3.2.1.7. When applicable, the sending and receiving sites for those waste military munitions received from or shipped to offsite sources.

C14.3.2.2. Physically separate (e.g., on a separate pallet or shelf) waste military munitions from non-waste military munitions when both are stored in the same ASU.

C14.3.2.3. Clearly mark the physically separated waste military munitions to ensure proper identification.

C14.3.2.4. Store waste military munitions under CE in ASU that comply (without waiver or exemption) with the provisions of this Standard. Each ASU storing waste military munitions or explosives under CE must be included in a DDESB-approved explosives safety site plan that the installation keeps on file. Those portions of the site plan addressing ASU storing waste military munitions under CE shall be made available to applicable Federal or State environmental regulatory authorities on request.

C14.3.2.5. Have SOP or plans (see section C8.6.) that provide safety, security, and environmental protection. Those plans shall be coordinated with the applicable Federal, State, and local emergency response authorities (e.g., law enforcement, fire departments, and hospitals; etc.) and any established LEPC.

C14.3.3. Loss of CE.

C14.3.3.1. The un-permitted or uncontrolled detonation, release, discharge, or migration (e.g., loss or theft, or as a result of fire or explosion) of waste military munitions out of any ASU that might endanger human health or the environment shall result in the immediate loss of CE for those waste military munitions. Incidents of that nature and the loss of CE require reporting under section C14.5.

C14.3.3.2. The applicable Federal or State environmental regulatory authorities may withdraw CE based on review or inspection of the installation's or responsible activity's compliance with the requirements for storage of waste military munitions under CE. The DoD Components may, at any time, restrict an activity from using CE. Additionally, the DDESB or the DoD Component, upon discovery of a condition that could warrant loss of CE, shall report the condition to the applicable DoD Component and to the commander of the installation or responsible activity.

C14.3.3.3. If CE is lost, the waste military munitions are subject to other RCRA hazardous waste regulations. The installation or responsible activity must obtain any required RCRA permits because of the loss of CE.

C14.3.3.4. Installations and responsible activities may apply for reinstatement of CE under 40 CFR 266.205(c) (Reference (an)).

C14.4. OTHER STORAGE STANDARDS

C14.4.1. The DoD Components shall forward to the Chairman, DDESB, a copy of their implementing standards or regulations pertaining to the storage of waste military munitions.

C14.4.2. Many States regulate waste management activities, including the storage of waste military munitions. Their authority is based on the waiver of sovereign immunity in federal environmental laws. Their laws, to the extent they fall within the waivers of sovereign immunity, take precedence over these Standards. If such State regulations conflict with DDESB or DoD Components' explosives safety standards, the affected Component shall attempt to resolve the conflict. For those issues that cannot be resolved, the DoD Component shall notify the Chairman, DDESB, through its Board Member if it has one, of any irreconcilable conflict of State law, regulation, or directive with these or other DoD or Military Component explosives safety standards.

C14.5. UN-PERMITTED AND UNCONTROLLED LOSS REPORTING

In addition to other applicable reporting requirements, installations and responsible activities shall notify their chain of command, the DDESB Chairman (through the DoD Component channels), the applicable Federal or State environmental regulatory authority, and established local committees, as follows:

C14.5.1. Telephonically or, in the case of the DoD Component and the DDESB, electronically (by e-mail message or facsimile and using the format specified in Chapter 13) within 24 hours from the time the installation or responsible activity becomes aware of any un-permitted or uncontrolled detonation, release, discharge, or migration of waste military munitions out of any ASU (e.g., loss or theft, or as a result of fire or explosion) that may endanger human health or the environment; and

C14.5.2. In writing, if the initial report was telephonic, within 5 days from the time the installation or responsible activity becomes aware of any un-permitted or uncontrolled detonation, release, discharge, or migration of waste military munitions out of any ASU (e.g., loss or theft, or as a result of fire or explosion) that may endanger human health or the environment. Follow-up reports to the DoD Component and the DDESB are required only when pertinent information, which was not previously reported, becomes known. Such reports, to include a report of investigation, shall comply with the requirements of Chapter 13.

C14.6. CLOSURE OF FACILITIES STORING WASTE MILITARY MUNITIONS UNDER CE

C14.6.1. In addition to the explosives safety requirements of section C1.4.:

C14.6.1.1. When an ASU that stored waste military munitions under CE is permanently taken out of service for the storage of non-waste and waste military munitions, installations and responsible activities shall ensure that such ASU are closed in accordance with applicable requirements.

C14.6.1.2. Installations or responsible activities must notify the cognizant Federal or State environmental regulatory authorities in writing at least 45 days before the closure activities begin, or as provided by applicable law. Initiation of those closure procedures should occur within 180 days, or as provided by applicable law, after the date the decision is made to permanently stop using the ASU for the storage of military munitions.

C14.6.1.3. On completion of closure activities, a “Certification of Closure,” signed by the installation or responsible activity commander, or other equivalent level authority, and by an independent (i.e., an individual not assigned within the commander’s or equivalent-level authority’s chain of command) registered professional engineer must be submitted to the cognizant Federal or State environmental regulatory authorities within 90 days of completing the closure activities, or as provided by applicable law.

C14.6.1.4. The Certificate of Closure must state, at a minimum, that each of the explosives safety requirements in section C1.4. have been met and that waste military munitions and residues are removed in such a manner as to protect the public and the environment consistent with the planned use of the ASU and of the property.

C14.6.1.5. If closure certification cannot be rendered, the installation or responsible activity must contact the cognizant Federal or State environmental regulatory authorities to determine the required course of action.

C14.6.2. Discontinuance of Use for the Storage of Waste Military Munitions. When an ASU that stored waste military munitions under CE is permanently taken out of service for the storage of waste military munitions, but is to continue in service for the storage of non-waste military munitions, installations and responsible activities shall ensure that waste military munitions and residues are removed.

C14.7. CLOSURE OF FACILITIES STORING WASTE MILITARY MUNITIONS UNDER RCRA

In addition to those explosives safety requirements in section C1.4., closure procedures for those sites operating under existing RCRA (Subpart EE of Parts 264 and 265 of 40 CFR (Reference (an))) permits shall follow the closure requirements stipulated in the respective permit.

C15. CHAPTER 15
UNEXPLODED ORDNANCE (UXO)

C15.1. SCOPE

This chapter establishes standards to protect personnel and property from explosive and CA hazards (see Chapter 11) associated with UXO or other military munitions, to include DMM, that have experienced abnormal environments. This chapter's standards do not apply during contingencies, combat operations, and military operations other than war; however, these explosives safety principles should always be considered in such circumstances and applied as the situation allows.

C15.2. GENERAL

C15.2.1. UXO are considered the most dangerous category of military munitions. However, other military munitions, to include DMM, that are encountered outside the Department of Defense's munitions logistics management system, particularly those that have experienced an abnormal environment, should be considered equally dangerous and managed as UXO until assessed and determined otherwise by technically-qualified personnel (i.e., EOD personnel, EOD-qualified U.S. Army Forces Command/20th Support Command/22nd Chemical Battalion personnel and, when specifically authorized by a DoD Component, UXO-qualified personnel). Military munitions that have experienced abnormal environments include, but are not limited to, munitions remaining after attempted demilitarization by OB or OD; munitions involved in accidents or fires; munitions or components subjected to certain tests (e.g., fuze arming tests, jolt and jumble tests) that might cause arming. (U.S. Army Forces Command/20th Support Command/ 22nd Chemical Battalion is manned with specially trained personnel that provide verification, sampling, detection, mitigation, render safe, decontamination, packaging, escort, and remediation of chemical, biological and industrial devices or hazardous materials.)

C15.2.1.1. UXO will most likely be found in areas that the Department of Department currently uses (e.g., operational ranges) or once used (e.g., former ranges) for military munitions training or testing. For a variety of reasons, UXO can also be encountered in other areas, to include where contingency, combat, or military operations other than war have occurred.

C15.2.1.2. Munitions that may have experienced an abnormal environment might be encountered in areas at which an accident or incident involving military munitions occurred, in areas that the Department of Defense uses or once used for open detonation of excess, obsolete, or unserviceable military munitions, or in other areas.

C15.2.2. Positive identification of any potential explosive or CA hazards and consideration of the potential consequences of an intentional or accidental detonation is required before disposition of any recovered munition. This is essential for munitions that might contain CA that would pose a potential downwind CA hazard. Therefore, for both explosives and CA safety reasons, munitions found outside the Department of Defense's established logistical munitions

management systems (e.g., UXO, DMM) shall be managed as UXO, until assessed, identified, and evaluated as to their explosive or CA hazards and determined otherwise by technically qualified personnel. Munitions that contain an unknown liquid fill shall also be managed as CWM until assessed, and the fill determined.

C15.2.2.1. Only EOD personnel and, in some cases, U.S. Army Forces Command/20th Support Command/22nd Chemical Battalion personnel will respond to military or civilian authority requests for support to an explosives or munitions emergency.

C15.2.2.2. For responses that either involve RCWM or munitions that contain an unknown liquid fill, U.S. Army Forces Command/20th Support Command/22nd Chemical Battalion personnel and, in cases where the munition's physical characteristics allow positive identification, EOD personnel, are the only DoD personnel authorized to determine the most probable fill of such munitions. The determination as to whether certain munitions contain a CA fill is difficult, if not impossible, solely by visual inspection.

C15.2.2.2.1. Many munitions have physical characteristics (e.g., shape, markings) that permit technically qualified personnel to rule out the potential for a CA fill. For example, a U.S.-manufactured 4-inch Stokes mortar's physical dimensions clearly indicate whether it contains a CA or explosive fill. However, the design or physical condition of some munitions may not allow their complete identification by visual inspection. This is especially true for used munitions and for munitions that have either experienced abnormal environments or been exposed to the elements (e.g., buried or submerged) for an extended period.

C15.2.2.2.2. Munitions whose external design does not always allow positive visual identification of their filler include, but may not be limited to: 4.2-inch mortars (M1, M2, and the M2A1 models) and Livens projectiles (MKII (M1) and MKIIAI) models. U.S. Army Forces Command/20th Support Command/22nd Chemical Battalion personnel and, in some cases, EOD personnel, are the only DoD personnel authorized to determine the most probable fill of these munitions.

C15.2.3. Discovery of military munitions (e.g., UXO) outside the Department of Defense's munitions logistics management system might, in some circumstances, indicate that a munitions response (see Chapter 12) or other protective measures are warranted. DoD Components shall notify the Chairman, DDESB, and their respective Service-level explosives safety office of:

C15.2.3.1. Repetitive explosives or munitions emergency responses to a discrete geographic area, where the circumstances surrounding the explosives or munitions emergency response are similar.

C15.2.3.2. A single explosives or munitions emergency response that involves multiple military munitions (e.g., UXO, DMM, or RCWM) discovered at a discrete geographic area. Such discoveries might indicate that the area is a FUDS.

C15.2.4. To meet the notification requirements of paragraph C15.2.3, DoD Components and the Executive Manager for EOD Technology and Training are encouraged to jointly work toward

development of an explosives or munitions emergency response incident reporting system that will ensure all incidents are similarly reported and retained in a single DoD database, which can be queried, and will automatically identify the conditions of paragraph C15.2.3.

C15.3. DISPOSITION OF UXO AND OF OTHER MILITARY MUNITIONS BEING MANAGED AS UXO

C15.3.1. The Department of Defense is responsible for protecting people, property, and the environment from potential explosive hazards (e.g., blast and fragmentation) or CA hazards (e.g., downwind hazards) associated with DoD-owned UXO. The Department of Defense is equally responsible for protecting personnel who respond to address such hazards.

C15.3.2. DoD Components shall work collaboratively with environmental regulators and safety officials toward resolving, in a mutually agreeable manner, any concerns with the planned disposition of UXO during a response action; however, the protection of people, to include DoD response personnel, from the hazards associated with the discovered munition and with its disposition is paramount.

C15.3.3. There are no safe procedures for moving, rendering safe, or destroying UXO, but merely procedures considered less dangerous. Destruction-in-place (also referred to as blow-in-place (BIP)) is the least dangerous; therefore, it is the preferred method of UXO destruction.

C15.3.4. DoD response actions to address UXO must comply with these Standards and other applicable DoD policies and with applicable federal, state, interstate, and local laws and regulations, and any enforceable agreements. DoD Components must ensure that, if not already in place, protective measures (e.g., site security) are implemented as quickly as practicable following discovery of UXO or other munitions outside the Department of Defense's munitions logistics management system. Should environmental regulators and safety officials have concerns regarding the sufficiency of the protective measures to be taken, these concerns should be raised to the appropriate-level DoD authority for resolution. Protective measures must be maintained throughout any delay caused by:

C15.3.4.1. Compliance with laws, regulations, and agreements.

C15.3.4.2. The need to address concerns raised by environmental regulators and safety officials about:

C15.3.4.2.1. Methods for managing any potential adverse impacts (e.g., harming endangered species, damaging cultural resources) of implementing a pending BIP operation.

C15.3.4.2.2. The use of alternative (to BIP) disposition methods.

C15.3.4.3. Other factors (e.g., weather).

C15.3.5. Military munitions known to contain CA or that contain or are suspected to contain an unknown liquid fill will not normally be destroyed by open detonation because they pose potential downwind CA hazards. The responsible DoD Component (normally the Department of the Army), no lower than the Deputy Assistant Secretary level, may approve individual exceptions. Such exceptions should only be approved after discussions (see paragraph C15.3.2.) with appropriate elected representatives, environmental regulators, and safety officials from those communities that could potentially be impacted by the munition's disposition. DoD Components must make sure that protective measures to ensure explosives safety are maintained during any delay in disposition.

C15.3.6. UXO shall not be moved unless technically qualified personnel determine that the risks associated with movement are acceptable. (During munitions responses, specifically authorized UXO-qualified personnel may make this determination.) Although environmental regulators and safety officials recognize the expertise of DoD personnel involved in UXO disposition decisions, they may challenge a DoD field expert's decision and seek to elevate their concerns to higher levels of authority for resolution. (See paragraphs C15.3.2. and C15.3.4.)

C15.3.6.1. If technically qualified personnel determine that the risk associated with movement is unacceptable, or if the munition's condition precludes a complete assessment beyond positive identification of any potential explosive hazard or determination that it does not present a CA hazard, then it should be BIP.

C15.3.6.2. In some circumstances, EOD personnel may determine that careful movement of a UXO, for a limited distance and using prescribed EOD procedures, is both necessary and allowed by EOD procedures. In such circumstances, destruction by detonation will occur in the general vicinity of discovery.

C15.3.7. Under some circumstances, when BIP does not pose an immediate, certain, and unacceptable risk to people, critical operations, facilities, or equipment, environmental regulators and safety officials may seek collaboration (see paragraph C15.3.2.) with DoD Components to mutually agree to mitigation measures to reduce potential impacts of the pending BIP to public safety, the environment, and cultural resources. (See paragraph C15.3.4.)

C15.3.8. When BIP poses an immediate, certain, and unacceptable risk to people, critical operations, facilities, or equipment, EOD personnel may determine that render safe procedures (RSP) should be attempted.

C15.3.8.1. Because the application of RSP exposes EOD personnel to added risks (greater than BIP), the application of RSP shall only be attempted in limited circumstances.

C15.3.8.2. Should EOD personnel employ RSP, protective measures shall be applied to mitigate potential explosive effects and, when necessary, a possible CA release.

C15.3.8.3. Only EOD personnel are authorized to conduct RSP.

C15.3.8.4. EOD personnel shall perform RSP per Joint Service EOD Technical Data.

C15.3.8.4.1. Conflicts between this Standard and the Joint Service EOD Technical Data should be raised to the Chairman, DDESB, and to the Joint EOD Program Board for resolution.

C15.3.8.4.2. When the condition of UXO (e.g., crushed, bent, broken, mangled) precludes strict adherence to published procedures, onsite EOD personnel will determine and perform the procedure -- established or innovative -- that will have the most probable degree of success to render the munitions safe while mitigating potential explosive or, when necessary, CA effects.

C15.3.9. The onsite EOD supervisor or, in the case of munitions responses, the UXO safety officer, shall ensure that the detonation site is inspected after each detonation or any misfire. No one shall be allowed within MSD from the detonation site until the onsite EOD supervisor or UXO safety officer declares the area is safe.

C15.3.10. When EOD personnel or, in the case of munitions responses, authorized UXO-personnel, positively identify UXO as to its explosive hazard and determine it safe to dispose of by other than BIP or immediate destruction by detonation, either in the general vicinity of discovery or at a designated location, then technically qualified personnel or an appropriate-level DoD authority with the advice of technically qualified personnel, may evaluate a variety of safe disposition alternatives and options for managing any potentially adverse impact of the selected disposition alternative. (See paragraph C15.3.2.)

C15.4. SPECIAL CONSIDERATIONS

C15.4.1. Disassembly and Inerting Operations

C15.4.1.1. Disassembly and inerting operations shall not be conducted without proper authorization.

C15.4.1.2. DoD Components must establish procedures for authorizing such operations.

C15.4.2. Construction Support

C15.4.2.1. Construction support may be required during intrusive activities (e.g., laying or repairing utilities, improving roads) on property known or suspected to contain UXO or DMM.

C15.4.2.2. The responsible authority (e.g., installation commander or designated representative) shall determine the level of construction support required on a case-by-case basis. Construction support is determined by the probability of encountering UXO or DMM.

C15.4.2.2.1. Low Probability. EOD personnel or UXO-qualified personnel must be contacted to ensure their availability, advised about the project, and placed “on call” to assist if

suspected UXO are encountered during construction. (Discoveries of UXO or DMM on such sites requires reassessment of the level of support required.)

C15.4.2.2.1.1. A "low" determination may only be assigned to those areas for which a search of available historical records and onsite investigation data indicates that, given the military or munitions-related activities that occurred at the site, the likelihood that UXO or other MEC are present is low.

C15.4.2.2.1.2. Munitions-related activities that may merit a "low" determination include, but are not limited to, the use of the area: for live-fire training exclusively with small arms ammunition; for maneuver training, to include maneuver training involving the use of smokes, pyrotechnics, and simulators; as firing points; for munitions inspection, handling, storage, or transfers, to include residue points and inert storage yards; for air defense; or as munitions operating facilities, the exceptions being facilities in which the processes used might have resulted in the generation of concentrations of munitions constituents high enough to present an explosive hazard. Areas on which a previous response has been completed, pursuant to a DDESB-approved ESS, for the stipulated reuse also qualify for "low" determinations.

C15.4.2.2.2. Moderate to High Probability. EOD personnel or UXO-qualified personnel must attempt to identify and remove any explosive or CA hazards in the construction footprint prior to any intrusive construction activities.

C15.4.2.2.2.1. A "moderate to high" determination may be assigned to those areas for which a search of available historical records or onsite investigation data indicates that, given the military or munitions-related activities that occurred at the site, there is more than a low probability that UXO or other MEC are present.

C15.4.2.2.2.2. Munitions-related activities that may merit a "moderate to high" determination include, but are not limited to, the use of the area: for live-fire training other than exclusively with small arms ammunition (e.g., munitions containing high explosive projectiles); as operational range impact areas; for OB or OD of excess, obsolete, or unserviceable munitions; as munitions operating facilities where processes used might have resulted in the generation of concentrations of munitions constituents high enough to present an explosive hazard; for munitions burial; or for any activities involving possible disposition of CWM.

C15.4.3. Anomaly Avoidance. Anomaly avoidance techniques must be employed on properties known or suspected to contain UXO or DMM to avoid surface UXO and, when necessary, subsurface anomalies.

C15.4.3.1. When anomaly avoidance is used during training (e.g., maneuver training, live-fire training), testing, or operational range management activities conducted on such properties, the commander responsible for such activities will ensure:

C15.4.3.1.1. A risk assessment to evaluate the potential hazards associated with the proposed activities is completed and methods to mitigate any potential exposures are implemented.

C15.4.3.1.2. Training in anomaly avoidance, explosives safety and, when appropriate, CA safety training is provided to all personnel involved in the training, testing, or operational range management activities that access property known or suspected to contain UXO or DMM.

C15.4.3.2. When anomaly avoidance is used during other than training or testing activities, or during activities involving other than operational range management activities:

C15.4.3.2.1. Surface UXO must be avoided during any activities that require entry to the area (e.g., conducting cultural resource studies).

C15.4.3.2.2. Surface UXO and subsurface anomalies must be avoided during any intrusive work (e.g., drilling environmental monitoring wells).

C15.4.3.2.3. Escort support must be provided by EOD personnel, or:

C15.4.3.2.3.1. Within areas known or suspected to contain UXO, excluding CA, regardless of configuration, by:

C15.4.3.2.3.1.1. UXO-qualified personnel.

C15.4.3.2.3.1.2. UXO Technician I personnel under the supervision of UXO-qualified personnel. The responsible commander or authority may, based on a risk assessment and implementation of methods to mitigate any potential exposures, approve UXO Technician I personnel to perform escort duties without supervision.

C15.4.3.2.3.2. Within areas known or suspected to contain CA, regardless of configuration, to include areas where such CA is commingled with other UXO, by UXO-qualified personnel trained in CWM responses.

C15.4.3.2.4. During anomaly avoidance:

C15.4.3.2.4.1. Discovered surface UXO must be avoided and their locations noted and reported to appropriate authorities.

C15.4.3.2.4.2. Detected subsurface anomalies which must not be investigated shall be marked, when appropriate, and avoided.

C15.5. ACCESS TO AREAS KNOWN OR SUSPECTED TO CONTAIN UXO

To ensure explosives and CA safety risk is identified and controlled on real property currently or formerly under the jurisdiction, custody, or control of a DoD Component, DoD Components must:

C15.5.1. Prohibit unnecessary access (e.g., livestock grazing; recreational uses, such as hunting and hiking) and take appropriate action to deter unauthorized access to areas under DoD control that are known or suspected to contain UXO or other munitions that have experienced abnormal environments.

C15.5.1.1. Access to such areas, particularly operational range impact areas, shall be limited to personnel who have an operational requirement to enter such areas (e.g., range maintenance, environmental monitoring, security). A risk assessment to evaluate the potential hazards associated with the proposed activity shall be completed and methods to mitigate any potential exposures shall be implemented before allowing access.

C15.5.1.2. Actions to prohibit or deter access may include establishing access controls (e.g., fencing the area, establishing roving security patrols) and providing public notifications (e.g., posting UXO hazard warning signs, conducting UXO safety education programs) of any potential hazards. (When used, signs must be legible and, when appropriate, multi-lingual or pictograms.)

C15.5.2. When the Department of Defense does not control the area (e.g., FUDS), at a minimum, provide written notification to the property owner and, if known, any tenants of the potential explosive and CA hazards present. A record of this notification must be maintained in permanent records.

C15.5.3. Assume the following areas contain UXO or other munitions that have experienced abnormal environments:

C15.5.3.1. Operational range impact areas, to include their associated safety zones (e.g., caution area, safety buffer zone). Exceptions include, but are not limited to, ranges used exclusively for training with small arms ammunition.

C15.5.3.2. Ranges (sites) used for OB or OD of excess, obsolete, or unserviceable munitions.

C15.5.3.3. Former impact areas and former OB or OD sites, unless documentation exists to show that they were adequately cleared during range closure or that an appropriate munitions response has been completed. In some cases, because these former impact areas or former OB or OD sites may have transferred from DoD control, the Department of Defense's ability to restrict access may be limited or nonexistent. In such cases, the responsible DoD Component shall, at a minimum, ensure that:

C15.5.3.3.1. The property owner is provided written notification of the potential explosives and CA hazards and the risks inherent in any use of property that is inconsistent with those hazards.

C15.5.3.3.2. A public UXO safety education program is implemented, when appropriate.

C15.5.4. On DoD property, prohibit construction in areas known or suspected to contain UXO or DMM without required:

C15.5.4.1. Construction or UXO avoidance support. (See paragraphs C15.4.2. or C15.4.3.)

C15.5.4.2. Approved ESS, CSS, or site plan for munitions responses. (See Chapter 12.)

C15.5.5. Provide, or in the case of owners or tenants of non-DoD controlled property, offer explosives safety and, when appropriate, CA safety training to all individuals authorized access to DoD property known or suspected to contain UXO.

C15.5.6. Develop guidelines to determine when individuals, who for operational reasons (e.g., environmental monitoring), are authorized access to areas under DoD control that are known or suspected to contain UXO, must be escorted into the area in accordance with subparagraph C15.4.3.2.3.

C15.5.7. Establish UXO safety education programs to educate DoD personnel, their dependents, and private citizens that live near areas known or suspected to contain UXO about explosive hazards and, when appropriate, CA hazards associated with UXO, and with the risks associated with trespassing on operational ranges or with entering areas known or suspected to contain UXO.

C15.5.8. Prior to changing the use of a property known or suspected to contain UXO or munitions that have experienced abnormal environments to a use that is incompatible with their presence:

C15.5.8.1. For operational ranges, perform an appropriate range clearance, whether changing to a similar (e.g., converting an impact area to a hand grenade range) or dissimilar use (e.g., changing a range to a maneuver area).

C15.5.8.2. For areas on DoD property, other than operational ranges, perform an appropriate munitions response.

C15.5.8.3. For property not under DoD control, upon learning of a proposed change in use or pertinent munitions response action, offer to engage in munitions response activities only to the extent necessary to ensure planned response actions afford protectiveness from an explosives and CA safety perspective. The DoD engagement in such munitions response activities may be limited to explosives safety experts providing basic guidance and advice during applicable deliberations, decision making, and approval activities unless additional DoD services are arranged through contractual or reimbursement mechanisms between DoD Components and other responsible parties.

C15.6. IDENTIFICATION AND CONTROL

To ensure explosives and CA safety risk is identified and controlled on real property currently or formerly under the jurisdiction, custody, or control of a DoD Component, DoD Components must create and maintain permanent records required by paragraph C12.2.2. When an operational range is closed or an installation is deactivated, the DoD Component concerned must designate the office to transfer these records to ensure their permanent retention.

C15.7. MSD FOR UXO

C15.7.1. The MSD for intentional detonations (see Chapter 9), which may be reduced if supported by a hazard assessment or when using approved engineering controls listed in EOD publications (for explosives or munitions emergency responses), Reference (j), or other DDESB-approved engineering controls (for munitions responses), is the greatest distance of:

C15.7.1.1. Blast overpressure, as computed by using the formula: $D = 328W^{1/3}$ [$D=130.16Q^{1/3}$].

C15.7.1.2. The calculated MFD, as provided in Reference (p).

C15.7.1.3. The appropriate downwind hazard distance for CA.

C15.7.2. The MSD for unintentional detonations (see Chapter 9), which may be reduced if supported by a hazard assessment or when approved engineering controls are employed, for:

C15.7.2.1. Nonessential Personnel. The greatest distance of:

C15.7.2.1.1. Blast overpressure, as computed by using the formula: $D = 40W^{1/3}$ [$D=15.87Q^{1/3}$].

C15.7.2.1.2. The calculated MFD, as provided in Reference (p). (NOTE: Lesser distances may be used if supported by a hazard assessment; however, in no case will the distance be less than the HFD as provided in Reference (p); the exception is when approved engineering controls are used.)

C15.7.2.1.3. The appropriate downwind hazard distance for CA.

C15.7.2.2. TSD. The greatest distance of:

C15.7.2.2.1. Blast overpressure, as computed by the formula: $D = 40W^{1/3}$ [$D=15.87Q^{1/3}$].

C15.7.2.2.2. The appropriate downwind hazard distance for CA.

C15.8. OTHER CONSIDERATIONS

C15.8.1. Transportation. All transportation must comply with the requirements of applicable federal, state, interstate, and local laws, and all implementing regulations relating to transportation of solid waste, hazardous substances, hazardous materials, and toxic substances.

C15.8.1.1. UXO. Before UXO that may pose an explosive or CA hazard may be transported or shipped over public transportation routes, EOD personnel must determine whether the UXO is safe for transport. (For material potentially presenting an explosive hazard, see subparagraph C16.3.3.2.) A determination that the UXO is safe for transport must be documented in the EOD incident report. A copy of the incident report must accompany the shipment.

C15.8.1.2. RCWM. Before RCWM may be transported or shipped, it must be assessed by the Army Material Assessment Review Board as safe for transport and packaged in an overpack container specifically designed and approved by the Army and by the DOT for the transport of RCWM (see subparagraph C12.5.9.6.). In addition, the specific notifications and concurrences required in 50 U.S.C. § 1512 (Reference (ao)) must be met.

C15.8.2. Firefighting Involving Areas Known or Suspected to Contain UXO or DMM. (See Chapter 8.)

C15.8.2.1. Advanced planning is essential for firefighting operations involving areas that are known or suspected to contain UXO or DMM or CA hazards. Coordination of such plans between firefighters and explosives safety personnel or EOD personnel and, when appropriate, CA safety professionals, is essential.

C15.8.2.2. Senior firefighting personnel should carefully assess whether to fight a fire involving areas that are known or suspected to contain explosive or CA hazards. Factors to consider include, but are not limited, to: the types of munitions that might be present; the safety of firefighting personnel and of the public; the potential loss of critical assets; and the duration and intensity of the fire.

C15.8.2.2.1. When the decision is made not to fight such fires, the area should be evacuated and remain so until it has cooled for at least 24 hours. (See paragraph C8.5.4.)

C15.8.2.2.2. When the decision is made to fight such fires, all firefighters involved in fighting the fire should be provided basic safety training for fighting fires involving military munitions.

C15.8.3. Controlled Burns

C15.8.3.1. Burning vegetation to facilitate safe UXO clearance or removal operations is permitted, provided proper safeguards are in place to protect all personnel from unintentional detonations. These burns must be carefully planned and executed to manage explosives safety risks and environmental effects. During such burning operations, all personnel shall be at MFD from the burning or burned area, based on the MGFD, and shall remain out of the area until it has cooled for at least 24 hours.

C15.8.3.2. Controlled burns will not be performed on areas known or suspected to contain CWM.

C15.8.4. Technology

C15.8.4.1. Explosives safety is a paramount consideration when determining the most appropriate technologies to be used to detect, excavate, remove, and dispose of UXO and other munitions that present an explosive hazard.

C15.8.4.2. The use of remotely operated equipment (e.g., excavators, sifters, and shredders) or other standoff technologies (e.g., lasers) may offer the safest approach for excavating and destroying UXO and should be considered.

C15.8.4.3. Subparagraph C12.5.8.3.5. addresses mechanized UXO processing operations.

C16. CHAPTER 16
MATERIAL POTENTIALLY PRESENTING AN EXPLOSIVE HAZARD (MPPEH)

C16.1. SCOPE

This chapter establishes explosives safety standards for MPPEH that supplement guidance provided in DoD Instruction 4140.62 (Reference (ap)). These Standards are intended to protect personnel and property from unintentional exposure to potential explosive hazards associated with material (including waste material) being managed or transferred within or released from DoD control.

C16.2. FUNCTIONS

C16.2.1. The Heads of the DoD Components shall establish criteria that may be risk-based to determine and document whether a receiver, either a DoD Component or non-DoD entity, is qualified to receive, manage, and process MPPEH through its release from DoD control These criteria shall be coordinated with the DDESB and the Deputy Under Secretary of Defense (Logistics and Material Readiness).

C16.2.2. The DDESB shall develop, through its coordination processes, specific explosives safety management procedures and standards for determining the explosives safety status of material and for processing MPPEH through its release from DoD control. The requirements of Reference (ap) and other DoD issuances will be synchronized with these explosives safety management procedures and standards.

C16.2.3. MPPEH, material documented as safe (MDAS), and material documented as hazardous (MDAH) shall be managed in a manner that complies with explosives safety standards, materiel management policies and environmental requirements. The effective management of MPPEH, MDAS, and MDAH will help prevent the unauthorized or unintentional transfer or release of an explosive hazard from DoD control; the transfer or release of material documented hazardous to an unqualified receiver; or a shipment that violates hazardous material transportation regulations.

AP1. APPENDIX 1

GLOSSARY

AP1.1. Aboveground Magazine (AGM). Any open area, vehicle, or any aboveground structure not meeting the requirements of an ECM that is used for explosives storage.

AP1.2. Aboveground Structure/Site (AGS). Any aboveground, non-earth-covered structure and/or site.

AP1.3. Acceptor and Donor. A total quantity of stored ammunition and explosives (AE) may be subdivided into separate storage units in order to reduce the maximum credible event (MCE). The separation distances between separate storage units, with or without an intervening barrier, need to be sufficient (e.g., intermagazine distance (IMD)) ensuring that propagation between units does not occur. The storage unit that reacts initially is termed the donor and nearby units, which may be endangered, are termed acceptors.

AP1.4. Action Level. One-half of the exposure limit for a chemical agent averaged over an 8-hour work shift.

AP1.5. Active Installation. A military installation that is currently in service and being regularly used for military activities.

AP1.6. Administration Area. The area containing administrative buildings that support the installation as a whole, excluding those offices located near and directly serving AE storage and operating areas.

AP1.7. AE Aircraft Cargo Area. Any area specifically designated for:

AP1.7.1. Aircraft loading or unloading of transportation-configured AE.

AP1.7.2. Parking aircraft loaded with transportation-configured AE.

AP1.8. AE Area. An area specifically designated and set aside from other portions of an installation for the development, manufacture, testing, maintenance, storage, or handling of AE.

AP1.9. AE Facility. Any structure or location containing AE. (Formerly called explosives facility.)

AP1.10. Airborne Exposure Limit (AEL). Time-weighted averages or ceiling values that define the permissible limits of toxic chemical agent exposure for unprotected personnel.

AP1.11. Aircraft Passenger Transport Operations. Passenger transport operations are defined for the purposes of quantity-distance (QD) as follows: Passenger transport traffic involving military dependents and civilians other than those employed by or working directly for the DoD Components. The following are not considered passenger transport operations:

AP1.11.1. Infrequent flights of base and command administrative aircraft that may, on occasion, provide some space available travel to authorized personnel.

AP1.11.2. Travel of direct hire appropriated funds personnel employed by any DoD Component.

AP1.11.3. Travel of such personnel as contractor and technical representatives traveling to or from direct support assignments at DoD installations.

AP1.12. Ammunition. Generic term related mainly to articles of military application consisting of all kinds of bombs, grenades, rockets, mines, projectiles and other similar devices or contrivances.

AP1.13. AE. Includes, but is not necessarily limited to, all items of U.S.-titled (i.e., owned by the U.S. Government through the DoD Components) ammunition; propellants, liquid and solid; pyrotechnics; high explosives; guided missiles; warheads; devices; and chemical agent substances, devices, and components presenting real or potential hazards to life, property and the environment. Excluded are wholly inert items and nuclear warheads and devices, except for considerations of storage and stowage compatibility, blast, fire, and non-nuclear fragment hazards associated with the explosives. (See Military Munitions.)

AP1.14. Ammunition Storage Unit (ASU). All types of explosives storage magazines; e.g., open storage areas, sheds, bunkers, ECM, and AGM.

AP1.15. Anchorages

AP1.15.1. Scuttling Site. A designated area of water for positioning a ship for its flooding or sinking under emergency situations.

AR1.15.2. Explosives Anchorage. A designated area of water used for AE loading and unloading of vessels and for anchoring vessels carrying a cargo of AE.

AP1.16. Anomaly Avoidance. Techniques employed on property known or suspected to contain unexploded ordnance (UXO), other munitions that may have experienced abnormal environments (e.g., discarded military munition (DMM)), munitions constituents in high enough concentrations to pose an explosive hazard, or chemical agent (CA), regardless of configuration, to avoid contact with potential surface or subsurface explosive or CA hazards, to allow entry to the area for the performance of required operations.

AP1.17. Auxiliary Building. Any building, e.g., power plant, change house, paint and solvent locker, and similar facilities, related to or maintained and operated to serve an operating building, line, plant, or pier area. AE is not present in an auxiliary building.

AP1.18. Barge Piers. Piers and wharves used exclusively for loading and/or unloading explosives on barges or utility craft.

AP1.19. Barge Units. See Ship or Barge Units.

AP1.20. Barricade. An intervening natural or artificial barrier of such type, size, and construction that limits the effect of an explosion on nearby buildings or exposures in a prescribed manner.

AP1.21. Barricaded Open Storage Module. A series of connected, barricaded cells with hard surface storage pads.

AP1.22. Blast Impulse. The area under the positive phase of the overpressure-time curve.

AP1.23. Blast Overpressure. The pressure above ambient in a shock wave.

AP1.24. Bonding. A physical and electrical connection between a metal object and the lightning protection sysem (LPS). This produces electrical continuity between LPS and the object and minimizes electromagnetic potential differences. Bonding is done to prevent side-flash. Methods of bonding include mechanical, compression, and thermal types.

AP1.25. Break Room. A room in an operating building or a separate facility used by personnel to take breaks and eat meals.

AP1.26. Bunker Suit. Apparel that consists of trousers or overalls tucked into a pair of boots; it is designed for dressing quickly when answering an alarm.

AP1.27. Burning Reaction. The energetic material ignites and burns non-propulsively. The case may open, melt, or weaken sufficiently to rupture nonviolently, allowing mild release of combustion gases. Debris primarily remains within the area of the reaction. The debris is not expected to cause fatal wounds to personnel or be a hazardous fragment beyond 50 ft [15.2 m].

AP1.28. Catenary LPS. An LPS consisting of one or more overhead wires suspended from poles connected to a grounding system via down conductors. The objective is to intercept lightning flashes and provide a zone of protection.

AP1.29. Cavern Storage Site. A natural or manmade cavern adapted for the storage of AE.

AP1.30. Ceiling Value. The concentration of chemical agent that may not be exceeded for any period of time.

AP1.31. Chain of Custody. From the time of collection through release from DoD control, the procedures and their implementation, including documentation, marking, and securing, that maintain positive control of material potentially presenting an explosive hazard (MPPEH), MDAH, and MDAS.

AP1.32. Chamber Storage Site. An excavated chamber or series of excavated chambers especially suited to the storage of AE. A cavern may be subdivided or otherwise structurally modified for use as a chamber storage site.

AP1.33. CA. A chemical compound (to include experimental compounds) that, through its chemical properties, produces lethal or other damaging effects on human beings, and is intended for use in military operations to kill, seriously injure, or incapacitate persons through its physiological effects. Excluded are research, development, test and evaluation solutions; riot control agents; chemical defoliants and herbicides; smoke and other obscuration materials; flame and incendiary materials; and industrial chemicals.

AP1.34. CA Hazard. A condition where danger exists because CA is present in a concentration high enough to present potential unacceptable effects (e.g., death, injury, damage) to people, operational capability, or the environment.

AP1.35. CA Safety. A condition where operational capability and readiness, people, property, and the environment are protected from the unacceptable effects or risks of a mishap involving chemical warfare material (CWM) and CA in other than munitions configurations.

AP1.36. CWM. Items generally configured as a munition containing a chemical compound that is intended to kill, seriously injure, or incapacitate a person through its physiological effects. CWM includes V- and G-series nerve agents or H-series (mustard) and L-series (lewisite) blister agents in other-than-munition configurations; and certain industrial chemicals (e.g., Hydrogen Cyanide (AC), Cyanogen Chloride (CK), or Carbonyl Dichloride (called phosgene or CG)) configured as a military munition. Due to their hazards, prevalence, and military-unique application, chemical agent identification set (CAIS) are also considered CWM. CWM does not include: riot control devices; chemical defoliants and herbicides; industrial chemicals (e.g., AC, CK, or CG) not configured as a munition; smoke and other obscuration-producing items; flame- and incendiary-producing items; or soil, water, debris or other media contaminated with low concentrations of chemical agents where no CA hazards exist.

AP1.37. CWM Response. Munitions responses and other responses to address the chemical safety; explosives safety, when applicable; human health; or environmental risks presented by CA-filled munitions and CA in other than munitions configurations. (See Munitions Response.)

AP1.38. Classification Yard. A railroad yard used for receiving, dispatching, classifying, and switching of cars.

AP1.39. Closure Block. A protective construction feature designed to seal the entrance tunnel to an underground storage chamber in the event of an explosion within the chamber.

AP1.40. Cluster Bomb/Dispenser Unit (CBU). Usually, subsets of non-robust AE that are designed to carry and dispense sub-munitions.

AP1.41. Cold Iron. The status of a ship that has shut down its main power plant and is dependent on shore power. A ship in cold iron is not capable of providing immediate propulsion.

AP1.42. Combat Aircraft Parking Area. Any area specifically designated for:

AP1.42.1. Aircraft loading or unloading of combat-configured munitions.

AP1.42.2. Parking aircraft loaded with combat-configured munitions.

AP1.43. Combustible Construction. Construction that uses materials that readily ignite and burn when exposed to fire (e.g., wood frame structures).

AP1.44. Compatibility. AE are considered compatible if they may be stored or transported together without significantly increasing either the probability of an accident or, for a given quantity, the magnitude of the effects of such an accident.

AP1.45. Compatibility Group (CG). Letter designation assigned to AE to indicate what may be stored or transported together without significantly increasing either the probability of an accident or, for a given quantity, the magnitude of the effects of such an accident.

AP1.46. Conditional Exemption (CE). An exemption from the regulatory definition of hazardous waste (and therefore from compliance with specific environmental requirements pertaining to the storage of hazardous waste) conditioned on compliance with certain criteria requirements, as in 40 CFR 266.205 (Reference (ao)).

AP1.47. Conductor. An LPS component designed to transfer the current of a lightning flash to the earth electrode system. Conductors are usually heavy metallic cables. However, metallic building structural members (e.g., steel I-beams) can also function as conductors.

AP1.48. Connected-Chamber Storage Site. A chamber storage site consisting of two or more chambers connected by ducts or passageways. Such chambers may be at the ends of branch tunnels off a main passageway.

AP1.49. Constriction. Constrictions are short lengths of tunnel whose cross-sectional areas are reduced to one-half or less of the normal tunnel cross-section. Constrictions reduce the airblast effects passing through them. To be effective, constrictions should be placed within five tunnel diameters of the tunnel exit or to the entrances of storage chambers.

AP1.50. Construction Support. Assistance provided by DoD explosive ordnance disposal (EOD) or UXO-qualified personnel and/or by personnel trained and qualified for operations involving CA, regardless of configuration, during intrusive construction activities on property known or suspected to contain UXO, other munitions that may have experienced abnormal environments (e.g., DMM), munitions constituents in high enough concentrations to pose an explosive hazard, or CA, regardless of configuration, to ensure the safety of personnel or resources from any potential explosive or CA hazards.

AP1.51. Container. A package designed to protect AE from hazardous environments during transportation and storage.

AP1.52. Counterpoise. A type of an earth electrode system consisting of conductor cables buried around the structure to be protected. Generally, a counterpoise will have more surface area contacting the earth than ground rod systems.

AP1.53. Debris. Any solid particle thrown by an explosion or other strong energetic reaction. For aboveground explosions, debris refers to secondary fragments. For explosions in underground facilities, debris refers to both primary and secondary fragments.

AP1.54. Debris Trap. A protective construction feature in an underground facility designed to capture fragments and debris from an explosion within the facility.

AP1.55. Defense Sites. See 10 U.S.C. 2710(e)(1) (Reference (ai)). Generally, locations that are or were owned by, leased to, or otherwise possessed or used by the Department of Defense. The term does not include any operational range, operating storage or manufacturing facility, or facility that is used for or was permitted for the treatment or disposal of military munitions.

AP1.56. Definitive Drawing. A design (e.g., a control bunker, a 3- or 7-Bar ECM, a missile test cell, or a barricade) that has been documented by a DoD Component on numbered drawings approved by the Department of Defense Explosives Safety Board (DDESB). The purpose of a definitive drawing is to provide a standard design to insure consistency in construction. Upon approval by the DDESB, it is not necessary for the definitive drawing to be reviewed again if the design has not been changed.

AP1.57. Deflagration Reaction. Ignition and rapid burning of the confined energetic materials builds up high local pressures leading to nonviolent pressure release as a result of a low strength case or venting through case closures (e.g., loading ports or fuze wells). The case might rupture but does not fragment; closure covers might be expelled, and unburned and burning energetic materials might be thrown about and spread the fire. Propulsion might launch an unsecured test item, causing an additional hazard. No blast or significant fragmentation damage to the surroundings is expected, only heat and smoke damage from the burning explosive substances.

AP1.58. Detonation Reaction. A supersonic decomposition reaction propagates through the energetic materials and produces an intense shock in the surrounding medium and very rapid plastic deformation of metallic cases, followed by extensive fragmentation. All energetic materials will be consumed. Effects will include: large ground craters for items on or close to the ground; holing, plastic flow damage, and fragmentation of adjacent metal structures; and blast overpressure damage to nearby structures.

AP1.59. DMM. See 10 U.S.C. 2710(e)(2) (Reference (ai)). Generally, military munitions that have been abandoned without proper disposal or removed from storage in a military magazine or other storage area for the purpose of disposal. The term does not include unexploded ordnance,

military munitions that are being held for future use or planned disposal, or military munitions that have been properly disposed of, consistent with applicable environmental laws and r regulations.

AP1.60. Disposal. End of life tasks or actions for residual materials resulting from demilitarization or disposition operations.

AP1.61. Disposition. Reusing, recycling, converting, redistributing, transferring, donating, selling, demilitarizing, treating, destroying, or fulfilling other life-cycle guidance, for DoD property subject to these standards.

AP1.62. Dividing Wall. A wall designed to prevent, control, or delay propagation of a reaction involving AE on opposite sides of the wall.

AP1.63. Documentation of the Explosives Safety Status of Material. Documentation attesting that material: (1) does not present an explosive hazard and is consequently safe for unrestricted transfer within or release from DoD control, or (2) is MPPEH, with the known or suspected explosive hazards stated, that is only transferable or releasable to a qualified receiver. This documentation must be signed by a technically qualified individual with direct knowledge of: (1) the results of both the material's 100 percent inspection and 100 percent re-inspection or of the approved process used and the appropriate level of re-inspection, and (2) the veracity of the chain of custody for the material. This signature is followed by the signature of another technically qualified individual who inspects the material on a sampling basis (sampling procedures are determined by DoD entity that is inspecting the material).

AP1.64. DoD Explosives Operations and/or Storage. Explosives operations conducted by the Department of Defense, or other Federal Agency, under DoD oversight, procedure, or control and in accordance with the explosives safety standards of this Standard. This term is applicable only to DoD and Federal explosives operations, and to non-DoD commercial enterprises directly supporting DoD and Federal explosives contractual efforts.

AP1.65. Donor and Acceptor. See Acceptor and Donor.

AP1.66. Down Conductor. See Conductor.

AP1.67. Dunnage. Inert material associated with the packaging, containerization, blocking and bracing of AE.

AP1.68. ECM. An aboveground, earth-covered structure that meets soil cover depth and slope requirements of this Standard. ECMs have three possible strength designations: 7-Bar, 3-Bar, or Undefined. The strength of an ECM's headwall and door determines its designation.

AP1.69. Earth Electrode System. An LPS component used for transferring current from a lightning flash to the earth. The earth electrode system (e.g., ground rods, counterpoise, buried metal plates, or Ufer grounds) is connected to down conductors and is in direct contact with the earth.

AP1.70. Electrically Initiated Device (EID). See MIL-HDBK-240 (Reference (ar)).

AP1.71. Electro-Explosive Device. See JP 1-02 (Reference (as)).

AP1.72. Electromagnetic Environment (EME). See MIL-HDBK-237 (Reference (at).

AP1.73. Electromagnetic Environmental Effects. See Reference (ar).

AP1.74. Electromagnetic Radiation. See Reference (as).

AP1.75. Emergency Withdrawal Distance. The distance personnel are evacuated to from an exposed site (ES) during an explosive accident or incident.

AP1.76. Emission Control. See Reference (as).

AP1.77. Energetic Liquid. A liquid, slurry, or gel consisting of or containing an explosive, oxidizer, fuel, or their combination that may undergo, contribute to, or cause rapid exothermic decomposition, deflagration, or detonation.

AP1.78. Engineering Controls. The management of facility operations using engineering principles (e.g., facility design, operation sequencing, equipment selection, or process limitations).

AP1.79. Environmental Regulators and Safety Officials. Includes, but may not be limited to, environmental regulators, environmental coordinators, or hazardous material coordinators, law enforcement officers, and safety personnel of the U.S. Environmental Protection Agency, state, interstate, and local governments (which may include Federally-recognized Indians tribes and Alaska Native entities), and other federal land managers. When appropriate, public health officials of various agencies may also be involved.

AP1.80. Equivalent Explosive Weight. The weight of TNT required to produce a selected shockwave parameter of equal magnitude at a specific location to that produced by a unit weight of the explosive in question.

AP1.81. Essential Personnel. Individuals, as identified by the DoD Component, associated with an AE operation.

AP1.82. Exemption. A written authorization granted by the proper authority within a DoD Component for strategic or other compelling reasons that permits a long-term deviation from a mandatory requirement of DoD explosives safety criteria.

AP1.83. Expansion Chamber. A protective construction feature in an underground storage facility designed to reduce the overpressure exiting the facility by increasing the total volume of the tunnel chamber complex. It may also function as an operating area within the underground facility or as a debris trap.

AP1.84. Explosion Reaction. Ignition and rapid burning of the confined energetic materials builds up high local pressures leading to breakup of the confining structure. Metal cases are fragmented (e.g., brittle fracture) into large pieces that are often thrown long distances. Unreacted or burning energetic materials are also thrown about. Fire and smoke hazards will exist. Air shocks are produced that can cause damage to nearby structures. The blast and high velocity fragments can cause minor ground craters and damage (e.g., breakup, tearing, gouging) to adjacent metal plates. Blast pressures are lower than for a detonation reaction.

AP1.85. Explosive. For the purposes of these Standards, a substance or a mixture of substances that is capable by chemical reaction of producing gas at such temperature, pressure, and speed as to cause damage to the surroundings. The term "explosive" includes all substances variously known as high explosives and propellants, together with igniters, primers, initiators, and pyrotechnics (e.g., illuminant, smoke, delay, decoy, flare, and incendiary compositions).

AP1.86. Explosive Accident. Accidents resulting in damage or injury from:

1. An explosion or functioning of explosive materials or devices (except as a result of enemy action).

2. Inadvertent actuation, jettisoning and releasing, or launching explosive devices.

3. Impacts of ordnance off-range.

AP1.87. Explosive Hazard. A condition where danger exists because explosives are present that may react (e.g., detonate, deflagrate) in a mishap with potential unacceptable effects (e.g., death, injury, damage) to people, property, operational capability, or the environment.

AP1.88. EOD. The detection, identification, onsite evaluation, rendering safe, recovery, and final disposal of unexploded ordnance and of other munitions that have become an imposing danger, for example by damage or deterioration.

AP1.89. EOD Personnel. Military personnel who have graduated from the Naval School, Explosive Ordnance Disposal; are assigned to a military unit with a Service-defined EOD mission; and meet Service and assigned unit requirements to perform EOD duties. EOD personnel have received specialized training to address explosive and certain CA hazards during both peacetime and wartime. EOD personnel are trained and equipped to perform render safe procedures (RSP) on nuclear, biological, chemical, and conventional munitions, and on improvised explosive devices.

AP1.90. EOD Unit. A military organization constituted by proper authority; manned with EOD personnel; outfitted with equipment required to perform EOD functions; and assigned an EOD mission.

AP1.91. Explosives or Munitions Emergency Response. See 40 CFR 260.10 (Reference (ao)).

AP1.92. Explosives Safety. A condition where operational capability and readiness, people, property, and the environment are protected from the unacceptable effects or risks of potential mishaps involving DoD military munitions or other encumbering explosives or munitions.

AP1.93. Explosives Safety Management. A cost-effective risk management process, including policies, procedures, standards, engineering, and resources, that addresses potential probabilities and consequences of mishaps involving DoD military munitions or other encumbering explosives or munitions, to sustain operational capabilities and readiness and to protect people, property, and the environment.

AP1.94. ES. A location exposed to the potential hazardous effects (e.g., blast, fragments, debris, or heat flux) from an explosion at a potential explosion site (PES).

AP1.95. Extremely Insensitive Detonating Substance. A substance that, although capable of sustaining a detonation, has demonstrated through tests that it is so insensitive that there is a very low probability of accidental initiation.

AP1.96. Faraday Cage. An LPS where the area to be protected is enclosed by a heavy metal screen (similar to a birdcage) or continuous metallic structure with no unbonded metallic penetrations. Lightning current flows on the exterior of the structure, not through its interior.

AP1.97. Faraday-Like Shield. An LPS that is not an ideal Faraday cage, but is formed by a contiguous conductive matrix that is properly bonded and grounded (e.g., electrically continuous steel arches and reinforcing bars of concrete end-walls and floors of steel arch magazines, reinforcing bars of ECM, or the metal shell of pre-fabricated "portable" magazines and metal buildings).

AP1.98. Firebrand. A burning or hot projection that may transfer thermal energy to the surroundings.

AP1.99. Formerly Used Defense Site. Properties previously owned, leased, or otherwise possessed by the United States and under the jurisdiction of the Secretary of Defense.

AP1.100. Forward Arming and Refueling Point (FARP). A temporary facility, organized, equipped, and deployed to provide fuel and AE necessary to support aviation maneuver units in combat. The FARP permits combat aircraft to rapidly refuel and rearm and is normally located in the main battle area closer to the area of operation than the aviation unit's combat service area.

AP1.101. Fragmentation. Fracture of AE confining cases and structures as the result of an initiation.

AP1.102. Fragmenting AE. Items that have cases that are designed to fragment (e.g., naturally fragmenting warheads, continuous rod warheads, items with scored cases, and items that contain pre-formed fragments).

AP1.103. Frost Line. The depth to which frost will penetrate soil (region-dependent).

AP1.104. General Public. Persons not associated with a DoD installation's mission or operations (e.g., visitors, guests of personnel assigned to the installation, or persons not employed or contracted by the Department of Defense or the installation).

AP1.105. Grounding. The method used for providing an electrical path to the earth or to the earth electrode system. Good grounding is a function of: the earth itself; temperature and moisture condition; an ionizing medium such as naturally-occurring salts; or the volume of the earth electrode.

AP1.106. Ground Shock. Coupling of energy to the ground as a result of an AE reaction. Localized movement of the ground or structures in the vicinity will occur.

AP1.107. Hardened Aircraft Shelter (HAS). Defined as being one of the following structure types addressed by this Standard:

AP1.107.1. TAB VEE. 24 ft [7.3 m] radius semicircular arch; 48 ft [14.7 m] wide by 100.8 ft [30.7 m] long; and prow=shaped front closure, vertically-hinged, recessed door. Considered as First Generation HAS.

AP1.107.2. First Generation (TAB VEE Modified). 24-ft [7.3 m] radius semicircular arch; 48 ft wide [14.7 m] by 100.8 ft [30.7 m] long; and prow-shaped front closure, laterally-opening, external flush door.

AP1.107.3. Second Generation. 29.4 ft [9.0 m] double-radius, pseudo-elliptical arch; 82 ft [25 m] wide by 124 ft [37.8 m] long; and vertical reinforced concrete panel, laterally-opening, sliding, external flush door.

AP1.107.4. Third Generation. 27.4 ft [8.4 m] double-radius, pseudo-elliptical arch; 70.8 ft [21.6 m] wide by 120 ft [36.6 m] long; and vertical reinforced concrete panel, laterally-opening, sliding, external flush door. A personnel door is located on one side and is protected by a barricade.

AP1.108. Hazard Classification. Process by which hazardous materials are assigned to one of the nine U.N. recognized classes of dangerous goods.

AP1.109. Hazardous Debris Distance. Distance at which the areal number density of hazardous debris becomes one per 600 ft^2 [55.7 m^2].

AP1.110. Hazard Division (HD). A division or subdivision denoting the character and predominant hazard within U.N. Classes 1, 2, 4, 5, and 6.

AP1.111. Hazardous Fragment Distance. Distance at which the areal number density of hazardous fragments or debris becomes one per 600 ft^2 [55.7 m^2].

AP1.112. Hazardous Fragment or Debris. Fragments or debris having an impact energy of 58 ft-lb [79 J] or greater.

AP1.113. HERO. Situations in which transmitting equipment (for example, radios, radar, electronic countermeasures, electronic counter-countermeasures, or ground penetrating radar) or other electromagnetic emitting devices can generate radiation of sufficient magnitude to: induce or otherwise couple electromagnetic energy sufficient to exceed specified safety and/or reliability margins in EIDs contained within ordnance, or cause radiation-induced damage or degradation of performance in military munitions containing EID. (Also see Reference (ar).)

AP1.114. Headwall. An ECM's front wall. It is a critical feature that is directly associated with the strength designation assigned to an ECM.

AP1.115. Heavy Armor. Main battle tanks or other vehicles that are expected to contain fragments and reduce blast overpressure generated from an internal explosion of its AE stores.

AP1.116. High Explosive (HE). An explosive substance designed to function by detonation (e.g., main charge, booster, or primary explosive).

AP1.117. HE Equivalence. See Equivalent Explosive Weight.

AP1.118. High Performance Magazine. An earth-bermed, 2-story, box-shaped structure with internal non-propagation walls designed to reduce the MCE.

AP1.119. High Pressure Closure. See Closure Block.

AP1.120. Holding Yard. A temporary holding location for railcars, trucks, trailers, or shipping containers before storage or transportation.

AP1.121. Hybrid Propellant. A propellant charge using a combination of physically separated solid and liquid (or gelled) substances as fuel and oxidizer.

AP1.122. Hygroscopic. A tendency of material to absorb moisture from its surroundings.

AP1.123. Hypergolic. A property of various combinations of chemicals to self-ignite upon contact with each other without a spark or other external initiation source.

AP1.124. Inhabited Building Distance (IBD). Distance to be maintained between a PES and an inhabited building.

AP1.125. Inhabited Buildings. Structures, other than AE-related buildings, occupied by personnel or the general public, both within and outside DoD establishments (e.g., schools, churches, residences, quarters, Service clubs, aircraft passenger terminals, stores, shops, factories, hospitals, theaters, mess halls, post offices, or post exchanges).

AP1.126. Inspection Station. A designated location at which trucks and railcars containing AE are inspected.

AP1.127. Installation-Related Personnel. Military personnel (to include family members), DoD employees, DoD contractor personnel, and other personnel having either a direct operational (military or other Federal personnel undergoing training at an installation) or logistical support (e.g., vendors) relationship with installation activities.

AP1.128. Integral Air Terminal LPS. An LPS that has strike termination devices mounted on the structure to be protected. The strike termination devices are connected to the earth electrode system via down conductors.

AP1.129. Interchange Yard. An area on a DoD installation set aside for exchanging railroad cars or vehicles with a common carrier.

AP1.130. Interim Holding Facility (IHF). A temporary storage facility designed to hold recovered chemical warfare material (RCWM).

AP1.131. IMD. Distance to be maintained between two AE storage locations.

AP1.132. Intraline Distance. The distance to be maintained between any two AE-related buildings or sites within an AE related operating line.

AP1.133. Joint DoD–Non-DoD Use Runway or Taxiway. A runway or taxiway serving both DoD and commercial aircraft. A runway or taxiway serving solely the Department of Defense, DoD-chartered, or Non-DoD aircraft on DoD authorized business is not joint use.

AP1.134. Joint Hazard Classification System (JHCS). A data base containing hazard classification and safety data for DoD AE.

AP1.135. Joint Storage. AE storage in a facility that includes both DoD-titled and non-DoD-titled AE. In other than ownership, the stored AE items are similar.

AP1.136. K-factor. The factor in the formula $D=KW^{1/3}$ used in QD determinations where D represents distance in ft and W is the NEW in lb. The K-factor is a constant and represents the degree of protection that is provided.

AP1.137. Land Use Controls. Physical, legal, or administrative mechanisms that restrict the use of, or limit access to, real property, to manage risks to human health and the environment. Physical mechanisms encompass a variety of engineered remedies to contain or reduce contamination, or physical barriers to limit access to real property, such as fences or signs.

AP1.138. Launch Pad. The load-bearing base, apron, or platform upon which a rocket, missile, or space vehicle and its launcher rest prior to launch.

AP1.139. Liquid Propellant. Energetic liquids used for propulsion or operating power for missiles, rockets, AE and other related devices.

AP1.140. Loading Density (w). Quantity of explosive per unit volume expressed as lbs/ft^3 [kg/m^3].

AP1.141. Loading Docks. Facilities, structures, or paved areas used for transferring AE between modes of transportation.

AP1.142. Long-Term Management. The period of site management (including maintenance, monitoring, record keeping, 5-year reviews, etc.) initiated after response (removal or remedial) objectives have been met (i.e., after Response Complete).

AP1.143. Lunch Room. A facility where meals may be distributed by food service personnel or brought by operating personnel for consumption. It may serve more than one PES.

AP1.144. Magazine. Any building or structure used exclusively for the storage of AE.

AP1.145. Marshalling Yard. A designated area near a port facility where a unit or activity consolidates their equipment and prepares for movement.

AP1.146. Mass Explosion. Explosion that affects almost the entire quantity of AE virtually instantaneously.

AP1.147. Mast LPS. An LPS consisting of one or more poles with a strike termination device connected to an earth electrode system by down conductors. Its purpose is to intercept lightning flashes and provide a zone of protection.

AP1.148. Material Documented as Safe (MDAS). MPPEH that has been assessed and documented as not presenting an explosive hazard and for which the chain of custody has been established and maintained. This material is no longer considered to be MPPEH

AP1.149. Material Documented as Hazardous (MDAH). MPPEH that has been assessed and documented as to the explosive hazards the material is known or suspected to present and for which the chain of custody has been established and maintained. This material is no longer considered to be MPPEH.

AP1.150. MPPEH. Material that, prior to determination of its explosives safety status, potentially contains explosives or munitions (e.g., munitions containers and packaging material; munitions debris remaining after munitions use, demilitarization, or disposal; and range-related debris); or potentially contains a high enough concentration of explosives such that the material presents an explosive hazard (e.g., equipment, drainage systems, holding tanks, piping, or ventilation ducts that were associated with munitions production, demilitarization or disposal operations). Excluded from MPPEH are munitions within DoD's established munitions management system and other hazardous items that may present explosion hazards (e.g.,

gasoline cans, compressed gas cylinders) that are not munitions and are not intended for use as munitions.

AP1.151. MCE. In hazards evaluation, the MCE from a hypothesized accidental explosion, fire, or toxic chemical agent release (with explosives contribution) is the worst single event that is likely to occur from a given quantity and disposition of AE. The event must be realistic with a reasonable probability of occurrence considering the explosion propagation, burning rate characteristics, and physical protection given to the items involved. The MCE evaluated on this basis may then be used as a basis for effects calculations and casualty predictions. For HD 1.2.1, the MCE is expressed as a weight which is the product of the net explosive weight for quantity-distance (NEWQD) and the 1) number of AE which reacts virtually instantaneously in the Sympathetic Reaction or Liquid Fuel/External Fire tests, or 2) number of AE in three unpalletized, outer shipping packages. The authorized MCE for a specific HD 1.2.1 item is listed in the JHCS.

AP1.152. Military Munitions. See 10 U.S.C. 101(e)(4) (Reference (au)).

AP1.153. Military Munitions Burial Site. A site, regardless of location, where military munitions or CA, regardless of configuration, were intentionally buried, with the intent to abandon or discard. This term includes burial sites used to dispose of military munitions or CA, regardless of configuration, in a manner consistent with applicable environmental laws and regulations or the national practice at the time of burial. It does not include sites where munitions were intentionally covered with earth during authorized destruction by detonation, or where *in situ* capping is implemented as an engineered remedy under an authorized response action.

AP1.154. Minimum Separation Distance. Minimum distance between a PES and personnel, assets, or structures, required to provide the appropriate level of protection from a detonation (either intentional or unintentional) at the PES.

AP1.155. Mitigation. A feature that reduces, limits, or controls the consequences of an AE reaction.

AP1.156. Module. See barricaded open storage module.

AP1.157. Munition with the Greatest Fragmentation Distance. The munition with the greatest fragment distance that is reasonably expected (based on research or characterization) to be encountered in any particular area.

AP1.158. Munitions and Explosives of Concern (MEC). A term distinguishing specific categories of military munitions that may pose unique explosives safety risks:

AP1.158.1. UXO, as defined in 10 U.S.C. 101(e)(5) (Reference (au)).

AP1.158.2. DMM, as defined in 10 U.S.C. 2710(e)(2) (Reference (ai)); or

AP1.158.3. Munitions constituents (MC) (e.g., TNT, cyclotrimethylenetrinitramine (RDX)), as defined in 10 U.S.C. 2710(e)(3) (Reference (ai)), present in high enough concentrations to pose an explosive hazard.

AP1.159. MC. See 10 U.S.C. 2710(e)(3) (Reference (ai)). Generally, any materials originating from UXO, DMM, or other military munitions, including explosive and non-explosive materials, and emission, degradation, or breakdown elements of such ordnance or munitions.

AP1.160. Munitions Debris. Remnants of munitions (e.g., fragments, penetrators, projectiles, shell casings, links, fins) remaining after munitions use, demilitarization, or disposal.

AP1.161. Munitions Response. Response actions, including investigation, removal actions, and remedial actions to address the explosives safety, human health, or environmental risks presented by UXO, DMM, or MC, or to support a determination that no removal or remedial action is required.

AP1.162. Munitions Response Area (MRA). Any area on a defense site that is known or suspected to contain UXO, DMM, or MC. Examples include former ranges and munitions burial areas. A munitions response area is comprised of one or more munitions response sites.

AP1.163. Munitions Response Site. A discrete location within an MRA that is known to require a munitions response.

AP1.164. Navigable Streams. For purposes of these Standards, those parts of streams, channels, or canals capable of being used in their ordinary or maintained condition as highways of commerce over which trade and travel are, or may be, conducted in the customary modes. Streams that are not capable of navigation by barges, tugboats, and other large vessels are not included, unless they are used extensively and regularly for the operation of pleasure boats.

AP1.165. Net Explosive Quantity. Net explosive weight (NEW) expressed in kg.

AP1.166. NEW. The total weight of all explosives substances (i.e., high explosives weight, propellant weight, and pyrotechnic weight) in the AE, expressed in pounds (lbs). NEW is used for transportation purposes.

AP1.167. NEWQD. The total weight, expressed in pounds [kilograms], of all explosive substances (high explosive weight, propellant weight, and pyrotechnic weight) in the AE, unless testing has been conducted to support an approved different value due to the contribution of high explosives, propellants, or pyrotechnics. For all HD 1.3 or 1.4 (other than S) AE, NEWQD is equal to NEW. NEWQD is used when applying QD and other criteria in this document.

AP1.168. Nitrogen Padding (or Blanket). The nitrogen filled void or ullage of a closed container used to prevent oxidation or to avoid formation of a flammable mixture, or a nitrogen atmosphere in or around an operation or piece of equipment.

AP1.169. Non-Combustible Construction. Construction that uses materials that do not readily ignite and burn when exposed to fire (e.g., concrete, masonry, and metal structures).

AP1.170. Non-DoD Entity. An entity (government, private, or corporate) that is not part of a DoD Component.

AP1.171. Non-DoD Explosives Operations and Storage. Explosives operations or storage conducted on DoD property, but not under DoD oversight. (See DoD Explosives Operations and Storage.)

AP1.172. Non-Essential Personnel. Individuals, as identified by the DoD Component, not associated with an AE operation.

AP1.173. Non-Robust Munitions. Those HD 1.1 and HD 1.2 AE that are not members of one of the following groups: Robust Munitions or Fragmenting Munitions (e.g., air-to-air missile warheads, CBU type munitions, and Sympathetic Detonation (SD) sensitive). Examples of non-robust munitions include torpedoes and underwater mines.

AP1.174. On-Call Construction Support. Construction support provided, on an as-needed basis, where the probability of encountering UXO, other munitions that may have experienced abnormal environments (e.g., DMM), MC in high enough concentrations to pose an explosive hazard, or CA, regardless of configuration, has been determined to be low. This support can respond from offsite when called, or be onsite and available to provide required construction support.

AP1.175. Onsite Construction Support. Dedicated construction support, where the probability
of encountering UXO, other munitions that may have experienced abnormal environments (e.g., DMM), MC in high enough concentrations to pose an explosive hazard, or CA, regardless of configuration, has been determined to be moderate to high.

AP1.176. On-The-Surface. A situation in which UXO, DMM, or CA, regardless of configuration, are: (a) entirely or partially exposed above the ground surface (i.e., the top of the soil layer); or (b) entirely or partially exposed above the surface of a water body (e.g., because of tidal activity).

AP1.177. One Percent Lethality Distance. A distance calculated from a given CA MCE and meteorological conditions (temperature, wind speed, Pasquill stability factor) and established as the distance at which dosage from that MCE agent release would be 150 mg-min/m^3 for H and HD agents, 75 mg-min/m^3 for HT agent, 150 mg-min/m^3 for L, 10 mg-min/m^3 for isopropyl methylphosphonofluoridate (GB) agent, 4.3 mg-min/m^3 for 0-ethyl S-[2-(diisopropylamino) Ethyl] Methylphosphonothioate (VX) vapor, and 0.1 mg-min/m^3 for inhalation and deposition of liquid VX.

AP1.178. Open Burn. An open-air combustion process by which excess, unserviceable, or obsolete munitions are destroyed to eliminate their inherent explosive hazards.

AP1.179. Open Detonation. An open-air process used for the treatment of excess, unserviceable, or obsolete munitions whereby an explosive donor charge initiates the munitions being treated.

AP1.180. Operating Building. Any structure, except a magazine, in which operations associated with AE are conducted (e.g., manufacturing, processing, handling, loading, or assembling).

AP1.181. Operating Line. A group of buildings, facilities, or related workstations so arranged as to permit performance of the consecutive steps of operations associated with AE (e.g., manufacture, loading, assembly, modification, or maintenance).

AP1.182. Operational Range. See 10 U.S.C. 101(e)(3) (Reference (au)). Also includes "military range," "active range," and "inactive range" as those terms are defined in 40 CFR 266.201 (Reference (ao)).

AP1.183. Operational Shield. A barrier constructed at a particular location or around a particular machine or operating station to protect personnel, material, or equipment from the effects of a localized fire or explosion.

AP1.184. Ordnance. Explosives, chemicals, pyrotechnics, and similar stores (e.g., bombs, guns and ammunition, flares, smoke, or napalm). (See Military Munitions.)

AP1.185. Packaging, Inner and Outer. For the purposes of this document, material used to surround and protect substances and articles during transportation and storage. They are generally made of lightweight materials such as fiberboard or fiberglass.

AP1.186. Passenger Railroad. Any steam, diesel, electric, or other railroad that carries passengers for hire.

AP1.187. Pier. A landing place or platform built into the water, perpendicular or oblique to the shore, for the berthing of vessels.

AP1.188. Portal Barricade. A barricade placed in front of an entrance into an underground storage facility. Its function is to reflect that portion of the shock wave moving directly outward from the entrance, thereby, reducing the pressures along the extended tunnel axis and increasing the pressures in the opposite direction. The result is a more circular IBD area centered at the portal.

AP1.189. PES. The location of a quantity of AE that will create a blast, fragment, thermal, or debris hazard in the event of an accidental explosion of its contents.

AP1.190. Primary Explosives. For the purposes of this document, primary explosives are highly sensitive compounds that are typically used in detonators and primers. A reaction is

easily triggered by heat, spark, impact, or friction. Examples of primary explosives are lead azide and mercury fulminate.

AP1.191. Primary fragment. A fragment from material in intimate contact with reacting AE.

AP1.192. Prohibited Area. A designated area at airfields, seadromes, or heliports where AE facilities are prohibited.

AP1.193. Propagation. Transfer of a reaction between AE.

AP1.194. Public Access Exclusion Distance (PAED). The PAED is defined as longest distance of the hazardous fragment distance (HFD), IBD for overpressure, or the One Percent Lethality Distance. For siting purposes, the PAED is analogous to the IBD for explosives; therefore, personnel not directly associated with the chemical operations are not to be allowed within the PAED.

AP1.195. Public Exclusion Distance. The calculated distance from the toxic chemical agent source at which no more than 10.0, 4.3, and 150 milligrams per minute per cubic meter is present for GB, VX, and mustard, respectively, or the explosives safety IBD, whichever is greater.

AP1.196. Public Traffic Route (PTR). Any public street, road, highway, navigable stream, or passenger railroad, including roads on a military reservation used routinely by the general public for through traffic.

AP1.197. Public Traffic Route Distance. Distance to be maintained between a PES and a PTR exposure.

AP1.198. Qualified Receiver. Individuals or entities that have personnel who are trained and experienced in the identification and safe handling of used and unused military munitions, and any known or potential explosive hazards that may be associated with the MPPEH they receive; and are licensed and permitted or otherwise qualified to receive, manage, and process MPPEH.

AP1.199. QD. The quantity of explosive material and distance separation relationships that provide defined levels of protection. The relationships are based on levels of risk considered acceptable for specific exposures and are tabulated in applicable QD tables. These separation distances do not provide absolute safety or protection. Greater distances than those in the QD tables should be used if practical.

AP1.200. Range. See 10 U.S.C. 101(e)(1) (Reference (au)).

AP1.201. Range Activities. See 10 U.S.C. 101(e)(2) (Reference (au)).

AP1.202. Range Clearance. The destruction or removal and proper disposition of used military munitions (e.g., UXO and munitions debris) and other range-related debris (e.g., target debris, military munitions packaging and crating material) to maintain or enhance operational range safety or prevent the accumulation of such material from impairing or preventing

operational range use. "Range clearance" does not include removal, treatment, or remediation of chemical residues or munitions constituents from environmental media, nor actions to address discarded military munitions (e.g., burial pits) on operational ranges.

AP1.203. Range-Related Debris. Debris, other than munitions debris, collected from operational ranges or from former ranges (e.g., target debris, military munitions packaging and crating material).

AP1.204. Ready Ammunition Storage. A location where AE is stored for near-term tactical or training use.

AP1.205. Real Property. Lands, buildings, structures, utilities systems, improvements, and appurtenances thereto. Includes equipment attached to and made part of buildings and structures (such as heating systems) but not moveable equipment (such as plant equipment).

AP1.206. RCWM. CWM used for its intended purpose or previously disposed of as waste, which has been discovered during a CWM response or by chance (e.g., accidental discovery by a member of the public), that the Department of Defense has either secured in place or placed under DoD control, normally in a DDESB-approved storage location or interim holding facility, pending final disposition.

AP1.207. Reduced QD Magazine. A containment structure that through full-scale testing has demonstrated its ability to contain or significantly control explosion effects (i.e., fragmentation, overpressure, thermal) associated with an internal explosion involving 125 percent of the magazine's rated NEWQD capacity, and has been approved by the DDESB for application of reduced QD.

AP1.208. RSP. The portion of EOD procedures that involves the application of special disposal methods or tools to interrupt the functioning or otherwise defeat the firing train of UXO from triggering an unacceptable detonation.

AP1.209. Risk. The product of the probability or frequency that an accident will occur within a certain time and the accident's consequences to people, property or the environment.

AP1.210. Robust Munitions. AE that meet two of the following criteria:

1. Have a ratio of the explosive weight to empty case weight less than 1.

2. Have a nominal wall thickness of at least 0.4 in [10 mm].

3. Have a case thickness/$NEW^{1/3} > 0.05$ in/$lb^{1/3}$ [0.165 cm/$kg^{1/3}$].

Examples of Robust Munitions include 20 mm, 25 mm, and 30 mm cartridges, general purpose bombs, artillery projectiles, and penetrator warheads.

AP1.211. Rock Strength. Designations (e.g., strong, moderately strong, or weak rock) providing a general classification of rock types.

AP1.212. Runway. Any surface on land designated for aircraft takeoff and landing operations, or a designated lane of water for takeoff and landing operations of seaplanes.

AP1.213. Secondary Explosives. For the purposes of this document, secondary explosives are generally less sensitive to initiation than primary explosives and are typically used in booster and main charge applications. A severe shock is usually required to trigger a reaction. Examples are TNT, RDX or cyclonite, Cyclotetramethylene-tetranitramine (HMX) (also known as octogen), and tetryl.

AP1.214. Secondary Fragment. Fragments produced by the impact of primary fragments or airblast into surrounding structures, AE, or earth.

AP1.215. Secretarial Exemptions or Certifications. A written authorization granted by the Service Secretary for strategic or other compelling reasons that permits long-term noncompliance with a mandatory requirement of DoD explosives safety criteria.

AP1.216. Secure Explosives Holding Area. See Part 205 of Reference (aa).

AP1.217. Secure Non-Explosives Holding Area. See Part 205 of Reference (aa).

AP1.218. Sensitivity Group (SG). A category used to describe the susceptibility of HD 1.1 and HD 1.2 AE to sympathetic detonation (SD). The SG are: Robust, Non-Robust, Fragmenting, CBU weapons, and SD Sensitive.

AP1.219. Service Magazine. A building of an operating line used for the intermediate storage of AE.

AP1.220. Shared Launch Facility. Any space or orbital launch facility supporting both DoD and non-DoD launch services and operations, as determined by the DoD Component involved or by mutual agreement when multiple DoD Components are involved.

AP1.221. Ship or Barge Units. Combination of AE ships (including submarines at berth), barges, or piers or wharves not separated by required IMD.

AP1.222. Sideflash. The phenomenon where lightning current will arc through a non-conductive medium in order to attach to other objects. An electrical spark caused by differences of potential that occurs between conductive metal bodies or between such metal bodies and a component of the LPS or earth electrode system.

AP1.223. Single-Chamber Storage Site. An excavated chamber with its own access to the natural ground surface that is not connected to any other storage chamber.

AP1.224. Small Arms Ammunition. Ammunition, without projectiles that contain explosives (other than tracers), that is .50 caliber or smaller, or for shotguns.

AP1.225. Source Emission Limits. The amount of toxic chemical agent that may be released at a particular point that allows for natural dilution, ventilation, and meteorological conditions.

AP1.226. Spall. The material broken loose from any surface of an acceptor chamber or cell by a shock wave transmitted through the wall. Spall is also used to describe this process.

AP1.227. Standoff distance. Minimum separation required between a wall or barrier and the edge of a stack of AE.

AP1.228. Static Missile Battery. Deployed ground-based missiles meant to be employed in a non-mobile mission for offensive or defensive purposes.

AP1.229. Static Test Stand. Locations where liquid energetic engines or solid propellant motors are tested in place.

AP1.230. Strike Termination Device or System. A component or feature of an LPS intended to intercept lightning strikes. They may include overhead wires or grids, air terminals, or a building's grounded structural elements.

AP1.231. Support Facilities. Facilities that support AE operations (e.g., field offices, AE support equipment maintenance, forklift charging stations, dunnage storage, or inert storage buildings).

AP1.232. Surge Suppression or Protection. The attenuation, suppression, or diversion of lightning-induced electrical energy to ground.

AP1.233. Suspect Truck and Railcar Holding Areas. A designated location for placing motor vehicles or railcars either containing AE that are suspected of being in a hazardous condition or motor vehicles or railcars that may be in a condition that is hazardous to the AE.

AP1.234. SD. The detonation of AE produced by the detonation of adjacent AE.

AP1.235. Tactical Facilities. Prepared locations with an assigned combat mission (e.g., missile launch facilities, alert aircraft parking areas, or fixed gun positions).

AP1.236. Taxiway. Any surface designated as such in the basic airfield clearance criteria specified by a DoD Component publication or Federal Aviation Regulation.

AP1.237. Team Separation Distance. The distance that munitions response teams must be separated from each other during munitions response activities involving intrusive operations.

AP1.238. Technology-Aided Surface Removal. A removal of UXO, DMM, or CWM on the surface (i.e., the top of the soil layer) only, in which the detection process is primarily performed visually, but is augmented by technology aids (e.g., hand-held magnetometers or metal detectors) because vegetation, the weathering of UXO, DMM, or CWM, or other factors make visual detection difficult.

AP1.239. Time Critical Removal Action. Generally, removal actions where, based on the site evaluation, a determination is made that a removal is appropriate, and that fewer than 6 months exists before onsite removal activity must begin.

AP1.240. TNT Equivalence. See Equivalent Explosive Weight.

AP1.241. Toxic Chemical Agent. A substance intended for military use with lethal or incapacitating effects on personnel through its chemical properties. Excluded from toxic chemical agents for purposes of this document are riot control agents, chemical herbicides, smoke- and flame-producing items, and individual dissociated components of toxic chemical agent munitions.

AP1.242. Toxic Chemical Agent Accident. Any unintentional or uncontrolled release of a toxic chemical agent when, as follows:

1. Reportable damage occurs to property from contamination, or costs are incurred for decontamination.

2. Individuals exhibit physiological symptoms of toxic chemical agent exposure.

3. The toxic chemical agent quantity released to the atmosphere is such that a serious potential for exposure is created by exceeding the applicable AEL for unprotected workers or the general public or property.

AP1.243. Toxic Chemical Agent MCE. The hypothesized maximum quantity of toxic chemical agent that could be accidentally released from AE without explosive contribution, bulk container, or process as a result of a single unintended, unplanned, or accidental occurrence. It must be realistic with a reasonable probability of occurrence.

AP1.244. Toxic Chemical Munitions. See 40 CFR Section 266.201 (Reference (ao)) and 50 U.S.C. Section 1521 (j) (1) (Reference (aw)).

AP1.245. Ufer Ground. An earth electrode system that consists of solid conductors encased along the bottom of a concrete foundation footing or floor and is in direct contact with earth.

AP1.246. Underground Storage Facility. Underground facilities which may consist of a single chamber or a series of connected chambers and other protective construction features. The chambers may be either excavated or natural geological cavities.

AP1.247. UXO. See 10 U.S.C. 101(e)(5) (Reference (au)).

AP1.248. UXO Technicians. Personnel who are qualified for and filling Department of Labor, Service Contract Act, Directory of Occupations, contractor positions of UXO Technician I, UXO Technician II, and UXO Technician III.

AP1.249. UXO-Qualified Personnel. Personnel who have performed successfully in military EOD positions, or are qualified to perform in the following Department of Labor, Service Contract Act, Directory of Occupations, contractor positions: UXO Technician II, UXO Technician III, UXO Safety Officer, UXO Quality Control Specialist, or Senior UXO Supervisor.

AP1.250. United States. The 50 States, the District of Columbia, the Commonwealth of Puerto Rico, the U.S. Virgin Islands, Guam, American Samoa, and the Commonwealth of the Northern Mariana Islands, Johnston Atoll, Kingman Reef, Midway Island, Nassau Island, Palmyra Island, Wake Island, and any other territory or possession over which the United States has jurisdiction, and associated navigable waters, contiguous zones, and ocean waters of which the natural resources are under the exclusive management authority of the United States.

AP1.251. Vent. Expose any internal cavities of MPPEH, to include training or practice munitions (e.g., concrete bombs), using DDESB or DoD Component-approved procedures, to confirm that an explosive hazard is not present.

AP1.252. Vulnerable Construction. Buildings constructed so that they are vulnerable to explosive destruction (e.g., schools, high-rise buildings, restaurants, large warehouse-type retail stores). There are three main types:

AP1.252.1. Buildings of curtain wall construction that have four stories or more and are constructed with external non-load bearing panels on a separate sub-frame that are supported off the structural frame or floors for the full height of the building.

AP1.252.2. Buildings of largely glass construction that have four stories or more and have at least 50 percent of their wall areas glazed.

AP1.252.3. Any large building that employs non-load-bearing cladding panels.

AP1.253. Waiver. A written authorization granted by the proper authority within a DoD Component for strategic or other compelling reasons that permits a temporary deviation from a mandatory requirement of DoD explosives safety criteria.

AP1.254. Waste Military Munition. See Reference (ao).

AP1.255. Wharf. A landing place or platform built into the water or along the shore for the berthing of vessels.

AP1.256. Wharf Yard. An AE area close to a pier or wharf where railcars or trucks are temporarily held in support of pier or wharf operations.

AP1.257. Wholly Inert. Those munitions (e.g., dummy) or munitions components (e.g., ogive, rotating band, adapter, lifting plugs) that have never contained reactive materials (i.e., explosives, chemical agents, or chemicals, such as pyrophoric chemicals). Once an inert item is employed as a component of a military munition, it may no longer be considered wholly inert.

AP1.258. Wingwall. A wall located on either side of an ECM's headwall. It may slope to the ground or may join a wingwall from an adjacent ECM. It may be monolithic (of single construction) or separated by expansion joints from the headwall. The purpose of a wingwall is to retain the earth fill along the side slope of an ECM.

AP1.259. With Means of Initiation. An AE item with its normal initiating device, such as a detonator or detonating fuze, assembled to it or packed with it, and this device is considered to present a significant risk during storage and transport, but not one great enough to be unacceptable.

AP1.260. Without Means of Initiation. An AE item without its normal initiating device assembled to it or packed with it. The term also applies to an AE item packed with its initiating device, provided the device is packed so as to eliminate the risk of causing detonation of the AE item in the event of accidental functioning of the initiating device. In addition, the term applies to an AE item assembled with its initiating device, provided there are protective features such that the initiating device is very unlikely to cause detonation of the AE item under conditions that are associated with storage and transport. For hazard classification purposes, a means of initiation that possesses two independent effective protective features is not considered to present a significant risk of causing the detonation of an AE item under conditions associated with storage and transport.

AP1.261. Zone of Protection. The space beneath the LPS that is substantially immune to direct lightning.

AP2. APPENDIX 2
EQUATIONS USED

AP2.1. CHAPTER 5

English/Metric	Equation Number	Equation
English	C5.T1-1	$D = 1.1W^{1/3}$
Metric	C5.T1-2	$D = 0.44Q^{1/3}$
English	C5.T1-3	$W = D^3/1.33$
Metric	C5.T1-4	$Q = D^3/0.083$
English	C5.2-1	$y(\%) = 50\log_{10}(16.02w)$
Metric	C5.2-2	$y(\%) = 50\log_{10}(1.0w)$
English	C5.2-3	$D_{cd} = 2.5W^{1/3}$
Metric	C5.2-4	$D_{cd} = .99Q^{1/3}$
English	C5.2-5	$D_{cd} = 5.0W^{1/3}$
Metric	C5.2-6	$D_{cd} = 1.98Q^{1/3}$
English	C5.2-7	$D_{cd} = 3.5W^{1/3}$
Metric	C5.2-8	$D_{cd} = 1.39Q^{1/3}$
English	C5.2-9	$D_{cp} = 1.5W^{1/3}$
Metric	C5.2-10	$D_{cp} = 0.59Q^{1/3}$
English	C5.2-11	$D_{cp} = 0.75W^{1/3}$
Metric	C5.2-12	$D_{cp} = 0.30Q^{1/3}$
English	C5.2-13	$Cc = 2.5W^{1/3}$
Metric	C5.2-14	$Cc = .99Q^{1/3}$
English	C5.T2-1	$D_{cd} = 2.5W^{1/3}$
Metric	C5.T2-2	$D_{cd} = 0.99Q^{1/3}$
English	C5.T2-3	W=Dcd3/15.625
Metric	C5.T2-4	$Q = D_{cd}^3/0.97$
English	C5.T2-5	$D_{cd} = 5W^{1/3}$
Metric	C5.T2-6	$D_{cd} = 1.98Q^{1/3}$
English	C5.T2-7	$W = D_{cd}^3/125$
Metric	C5.T2-8	$Q = D_{cd}^3/7.762$
English	C5.T2-9	$D_{cd} = 3.5W^{1/3}$
Metric	C5.T2-10	$D_{cd} = 1.39Q^{1/3}$
English	C5.T2-11	$W = D_{cd}^3/42.875$
Metric	C5.T2-12	$Q = D_{cd}^3/2.686$
English	C5.T2-13	$D_{cd} = 1.5W^{1/3}$

Metric	C5.T2-14	$D_{cd} = 0.60Q^{1/3}$
English	C5.T2-15	$W = D_{cd}^3/3.375$
Metric	C5.T2-16	$Q = D_{cd}^3/0.216$
English	C5.T2-17	$D_{cd} = 0.75W^{1/3}$
Metric	C5.T2-18	$D_{cd} = 0.30Q^{1/3}$
English	C5.T2-19	$W = D_{cd}^3/0.422$
Metric	C5.T2-20	$Q = D_{cd}^3/0.027$

AP2.2. CHAPTER 9

English/Metric	Equation Number	Equation
English	C9.4-1	loading density = NEWQD (lbs)/internal volume (ft^3)
Metric	C9.4-2	loading density = NEWQD (kg)/internal volume (m^3)
English	C5.4-3	$d=40W^{1/3}$
Metric	C9.4-4	$d=15.87Q^{1/3}$
English	C5.T1-1	$d = 35NEWQD^{1/3}$
English	C5.T1-2	$d = 35NEWQD^{1/3}$
English	C5.T1-3	$d = 0.3955NEWQD^{0.7227}$
English	C5.T1-4	$d = 50NEWQD^{1/3}$
Metric	C9.T1-5	$d = 13.88NEWQD^{1/3}$
Metric	C9.T1-6	$d = 13.88NEWQD^{1/3}$
Metric	C9.T1-7	$d = 0.2134NEWQD^{0.7227}$
Metric	C9.T1-8	$d = 19.84NEWQD^{1/3}$
English	C5.T1-9	$NEWQD = d^3/42,875$
English	C5.T1-10	$NEWQD = d^3/42,875$
English	C5.T1-11	$NEWQD = 3.60935d^{1.3837}$
English	C5.T1-12	$NEWQD = d^3/125,000$
Metric	C9.T1-13	$NEWQD = d^3/2,674.04$
Metric	C9.T1-14	$NEWQD = d^3/2,674.04$
Metric	C9.T1-15	$NEWQD = 8.4761d^{1.3837}$
Metric	C9.T1-16	$NEWQD = d^3/7,809.53$
English	C5.T1-17	$d = 25NEWQD^{1/3}$
English	C5.T1-18	$d = 0.004125NEWQD^{1.0898}$
English	C5.T1-19	$d = 50NEWQD^{1/3}$
Metric	C9.T1-20	$d = 9.92NEWQD^{1/3}$
Metric	C9.T1-21	$d = 0.002976NEWQD^{1.0898}$
Metric	C9.T1-22	$d = 19.84*NEWQD^{1/3}$
English	C5.T1-23	$NEWQD = d^3/15,625$

English	C5.T1-24	$NEWQD = 154.2006d^{0.91760}$
English	C5.T1-25	$NEWQD = d^3/125{,}000$
Metric	C9.T1-26	$NEWQD = d^3/976.19$
Metric	C9.T1-27	$NEWQD = 208.0623d^{0.91760}$
Metric	C9.T1-28	$NEWQD = d^3/7{,}809.53$
English	C5.T1-29	$d = 40NEWQD^{1/3}$
English	C5.T1-30	$d = 2.42NEWQD^{0.577}$
English	C5.T1-31	$d = 50NEWQD^{1/3}$
Metric	C9.T1-32	$d = 15.87NEWQD^{1/3}$
Metric	C9.T1-33	$d = 1.1640NEWQD^{0.577}$
Metric	C9.T1-34	$d = 19.84NEWQD^{1/3}$
English	C5.T1-35	$NEWQD = d^3/64{,}000$
English	C5.T1-36	$NEWQD = 0.2162d^{1.7331}$
English	C5.T1-37	$NEWQD = d^3/125{,}000$
Metric	C9.T1-38	$NEWQD = d^3/3{,}989.42$
Metric	C9.T1-39	$NEWQD = 0.7686d^{1.7331}$
Metric	C9.T1-40	$NEWQD = d^3/7{,}809.53$
English	C5.T2-1	HFD = 291.3 + [79.2 x ln(NEWQD)
English	C5.T2-2	HFD = -1133.9 + [389 x ln(NEWQD)
Metric	C9.T2-3	HFD = 107.87 + [24.14 x ln(NEWQD)
Metric	C9.T2-4	HFD = -251.87 + [118.56 x ln(NEWQD)
English	C5.T2-5	NEWQD = exp [(HFD/79.2) - 3.678]
English	C5.T2-6	NEWQD = exp [(HFD/389) + 2.914]
Metric	C9.T2-7	NEWQD = exp [(HFD/24.14) – 4.4685]
Metric	C9.T2-8	NEWQD = exp [(HFD/118.56) + 2.1244]
English	C5.T2-9	HFD = HFD = -1133.9 + [389 x ln(NEWQD)]
Metric	C9.T2-10	HFD = HFD = -251.87 + [118.56 x ln(NEWQD)]
English	C5.T2-11	NEWQD = exp[(HFD/389) + 2.914]
Metric	C9.T2-12	NEWQD = exp[(HFD/118.56) + 2.2144]
English	C5.T4-1	$d = 10*NEWQD^{1/3}$
English	C5.T4-2	$d = (13.659 – 1.6479 \times 10^{-5}*NEWQD + 1.4358 \times 10^{-11}*NEWQD^2)*NEWQD^{1/3}$
English	C5.T4-3	$NEWQD = d^3/1000$
English	C5.T4-4	$NEWQD = 1.50138 \times 10^8 - 6.73914 \times 10^5*d + 1002.9*d^2 - 0.4938*d^3$
Metric	C9.T4-5	$d = 3.97*NEWQD^{1/3}$
Metric	C9.T4-6	$d = (5.419 – 1.4410 \times 10^{-5}*NEWQD + 2.7684 \times 10^{-11}*NEWQD^2)*NEWQD^{1/3}$
English	C5.T4-7	$NEWQD = d^3/62.429$
Metric	C9.T4-8	$NEWQD = 6.80924 \times 10^7 - 1.002764 \times 10^6*d + 4895.93*d^2 - 7.90884*d^3$

English	C5.T4-9	$d = 7*NEWQD^{1/3}$
English	C5.T4-10	$d = (1.0848 + 1.986 \times 10^{-5}*NEWQD)*NEWQD^{1/3}$
English	C5.T4-11	$d = 9*NEWQD^{1/3}$
English	C5.T4-12	$NEWQD = d^3/343$
English	C5.T4-13	NEWQD = 57,424 + 515.89*d]
English	C5.T4-14	$NEWQD = d^3/729$
Metric	C9.T4-15	$d = 2.78*NEWQD^{1/3}$
Metric	C9.T4-16	$d = (0.4303 + 1.7369 \times 10^{-5}*NEWQD)*NEWQD^{1/3}$
Metric	C9.T4-17	$d = 3.57*NEWQD^{1/3}$
Metric	C9.T4-18	$NEWQD = d^3/21.413$
Metric	C9.T4-19	NEWQD = 26,048 + 767.73*d
Metric	C9.T4-20	$NEWQD = d^3/45.511$
English	C5.T4-21	$d = 6*NEWQD^{1/3}$
English	C5.T4-22	$d = (-3.059 + 3.0228 \times 10^{-5}*NEWQD)*NEWQD^{1/3}$
English	C5.T4-23	$d = 9*NEWQD^{1/3}$
English	C5.T4-24	$NEWQD = d^3/216$
English	C5.T4-25	NEWQD = 148,160 + 379.7*d
English	C5.T4-26	$NEWQD = d^3/729$
Metric	C9.T4-27	$d = 2.38*NEWQD^{1/3}$
Metric	C9.T4-28	$d = (-1.2135 + 2.6437 \times 10^{-5}*NEWQD)*NEWQD^{1/3}$
Metric	C9.T4-29	$d = 3.57*NEWQD^{1/3}$
Metric	C9.T4-30	$NEWQD = d^3/13.485$
Metric	C9.T4-31	NEWQD = 67,206 + 565.05*d
Metric	C9.T4-32	$NEWQD = d^3/45.511$
English	C5.T4-33	$d = 18*NEWQD^{1/3}$
English	C5.T4-34	$NEWQD = d^3/5,832$
Metric	C9.T4-35	$d = 7.14*NEWQD^{1/3}$
Metric	C9.T4-36	$NEWQD = d^3/364.086$
English	C5.T4-37	$d = 16*NEWQD^{1/3}$
English	C5.T4-38	$d = (9.9683 + 2.0135 \times 10^{-5}*NEWQD)*NEWQD^{1/3}$
English	C5.T4-39	$d = 18*NEWQD^{1/3}$
English	C5.T4-40	$NEWQD = d^3/4,096$
English	C5.T4-41	NEWQD = -118,180 + 390.35*d
English	C9.T4-42	$NEWQD = d^3/5,832$
Metric	C9.T4-43	$d = 6.35*NEWQD^{1/3}$
Metric	C9.T4-44	$d = (3.9544 + 1.76097 \times 10^{-5} *NEWQD)*NEWQD^{1/3}$
Metric	C9.T4-45	$d = 7.14*NEWQD^{1/3}$

Metric	C9.T4-46	NEWQD = d^3/255.709
Metric	C9.T4-47	NEWQD = -53,605 + 580.89*d
Metric	C9.T4-48	NEWQD = d^3/364.086
English	C5.T4-49	d = 12*$NEWQD^{1/3}$
English	C5.T4-50	d = (11.521 + 1.9918 x 10^{-6}*NEWQD + 2.0947 x 10^{-11}* $NEWQD^2$)* $NEWQD^{1/3}$
English	C5.T4-51	d = (1.9389+ 4.0227 x 10^{-5}*NEWQD)* $NEWQD^{1/3}$
English	C5.T4-52	d = 18*$NEWQD^{1/3}$
English	C5.T4-53	NEWQD = d^3/1,728
English	C5.T4-54	NEWQD = -193,080+526.83*d
English	C5.T4-55	NEWQD = 60,778 + 255.83*d
English	C5.T4-56	NEWQD = d^3/5,832
Metric	C9.T4-57	d = 4.76*$NEWQD^{1/3}$
Metric	C9.T4-58	d = (4.5704 + 1.7420 x 10^{-6}*NEWQD + 4.0389 x 10^{-11}* $NEWQD^2$)* $NEWQD^{1/3}$
Metric	C9.T4-59	d = (0.7692+ 3.5182 x 10^{-5}*NEWQD)* $NEWQD^{1/3}$
Metric	C9.T4-60	d = 7.14*$NEWQD^{1/3}$
Metric	C9.T4-61	NEWQD = d^3/107.877
Metric	C9.T4-62	NEWQD = -87,578 + 784.00*d
Metric	C9.T4-63	NEWQD = 27,568 + 380.7*d
Metric	C9.T4-64	NEWQD = d^3/364.086
English	C5.T5-1	d = 9*$NEWQD^{1/3}$
Metric	C9.T5-2	d = 3.57*$NEWQD^{1/3}$
English	C5.T5-3	NEWQD = d^3/729
Metric	C9.T5-4	NEWQD = d^3/45.511
English	C5.T5-5	d = 18*$NEWQD^{1/3}$
Metric	C9.T5-6	d = 7.14*$NEWQD^{1/}$
English	C5.T5-7	NEWQD = d^3/5,832
Metric	C9.T5-8	NEWQD = d^3/364.086
English	C5.T9-1	IBD = -735.186 + [237.559 x (ln(Number of items x NEWQD))] - [4.274 x (ln(Number of items x NEWQD))^2]
Metric	C9.T9-2	IBD = -167.648 + [70.345 x (ln(Number of items x NEWQD))] - [1.303 x (ln(Number of items x NEWQD))^2]
English	C5.T9-3	Number of items x NEWQD = exp[27.791 - (600.392 - 0.234 x IBD)$^{1/2}$]
Metric	C9.T9-4	Number of items x NEWQD = exp[27.000 – (600.287 – 0.768 x IBD)$^{1/2}$]
English	C5.T10-1	Hazardous debris distance = -1133.9 + [389 x ln(MCE)]
Metric	C9.T10-2	HFD = -251.87 + [118.56 x ln(MCE)]
Metric	C9.T10-3	MCE = exp [(Hazardous Debris Distance/389) + 2.914]
English	C5.T10-4	MCE = exp [(Hazardous Debris Distance/118.56) + 2.1244]

English	C5.T11-1	IBD = 101.649 - [15.934 x (ln(Number of items x NEWQD))] + [5.173 x (ln(Number of items x NEWQD))^2],
Metric	C9.T11-2	IBD = 28.127 - [2.364 x (ln(Number of items x NEWQD))] + [1.577 x (ln(Number of items x NEWQD))^2]
English	C5.T11-3	Number of items x NEWQD = exp [1.5401 + (-17.278 + 0.1933 x IBD)$^{1/2}$]
Metric	C9.T11-4	Number of items x NEWQD = exp [0.7495 + (-17.274 + 0.6341 x IBD)$^{1/2}$]
English	C5.T13-1	$d_{IBD,PTRD}$ = exp[2.47 + 0.2368*(ln(NEWQD)) + 0.00384*(ln(NEWQD))^2]
English	C5.T13-2	$d_{IBD,PTRD}$ = exp[7.2297 - 0.5984*(ln(NEWQD)) + 0.04046*(ln(NEWQD))^2]
English	C5.T13-3	$d_{IBD,PTRD}$ = 8*NEWQD$^{1/3}$
Metric	C9.T13-4	$d_{IBD,PTRD}$ = exp[1.4715 + 0.2429*(ln(NEWQD)) + 0.00384*(ln(NEWQD))^2]
Metric	C9.T13-5	$d_{IBD,PTRD}$ = exp[5.5938 - 0.5344*(ln(NEWQD)) + 0.04046*(ln(NEWQD))^2]
Metric	C9.T13-6	$d_{IBD,PTRD}$ = 3.17*NEWQD$^{1/3}$
English	C5.T13-7	NEWQD = exp[-30.833 + (307.465 + 260.417*(ln($d_{IBD,PTRD}$)))$^{1/2}$]
English	C5.T13-8	NEWQD = exp[7.395 + (-124.002 + 24.716*(ln($d_{IBD,PTRD}$)))$^{1/2}$]
English	C5.T13-9	NEWQD = $d_{IBD,PTRD}^3$ /512
Metric	C9.T13-10	NEWQD = exp[-31.628 + (617.102 + 260.417*(ln($d_{IBD,PTRD}$)))$^{1/2}$]
Metric	C9.T13-11	NEWQD = exp[6.604 + (-94.642 + 24.716*(ln($d_{IBD,PTRD}$)))$^{1/2}$]
Metric	C9.T13-12	NEWQD = $d_{IBD,PTRD}^3$ /131.964
English	C5.T13-13	$d_{IMD,ILD}$ = exp[2.0325 + 0.2488*(ln(NEWQD)) + 0.00313*(ln(NEWQD))^2]
English	C5.T13-14	$d_{IMD,ILD}$ = exp[4.338 - 0.1695*(ln(NEWQD)) + 0.0221*(ln(NEWQD))^2]
English	C5.T13-15	$d_{IMD,ILD}$ = 5*NEWQD$^{1/3}$
Metric	C9.T13-16	$d_{IMD,ILD}$ = exp[1.0431 + 0.2537*(ln(NEWQD)) + 0.00313*(ln(NEWQD))^2]
Metric	C9.T13-17	$d_{IMD,ILD}$ = exp[3.0297 - 0.1346*(ln(NEWQD)) + 0.0221*(ln(NEWQD))^2]
Metric	C9.T13-18	$d_{IMD,ILD}$ = 1.98*NEWQD$^{1/3}$
English	C5.T13-19	NEWQD = exp[-39.744 + (930.257 + 319.49*(ln($d_{IMD,ILD}$)))$^{1/2}$]
English	C5.T13-20	NEWQD = exp[3.834 + (-181.58 + 45.249*(ln($d_{IMD,ILD}$)))$^{1/2}$]
English	C5.T13-21	NEWQD = $d_{IMD,ILD}^3$/125
Metric	C9.T13-22	NEWQD = exp[-40.527 + (1309.19 + 319.49*(ln($d_{IMD,ILD}$)))$^{1/2}$]
Metric	C9.T13-23	NEWQD = exp[3.045 + (-127.817 + 45.249*(ln($d_{IMD,ILD}$)))$^{1/2}$]
Metric	C9.T13-24	NEWQD = $d_{IMD,ILD}^3$/7.804
English	C5.T15-1	$D_{IBD,PTRD}$ = 40W$^{1/3}$
Metric	C9.T15-2	$D_{IBD,PTRD}$ = 15.87Q$^{1/3}$
English	C5.T15-3	$D_{IMD, ILD}$ = 18W$^{1/3}$
Metric	C9.T15-4	$D_{IMD, ILD}$ = 7.14Q$^{1/3}$
English	C5.T15-5	$D_{IBD,PTRD}$ = 8W$^{1/3}$
English	C5.T15-6	NEWQD = $D_{IBD,PTRD}^3$/512
Metric	C9.T15-7	$D_{IBD,PTRD}$ = 3.17Q$^{1/3}$

Metric	C9.T15-8	NEWQD = $D_{IBD,PTRD}^3/31.86$
English	C5.T15-9	$D_{IMD, ILD} = 5W^{/3}$
English	C5.T15-10	NEWQD = $D_{IMD, ILD}^3/125$
Metric	C9.T15-11	$D_{IMD, ILD} = 1.98Q^{1/3}$
Metric	C9.T15-12	NEWQD = $D_{IMD, ILD}^3/7.76$
English	C5.T17-1	lbs of energetic liquids = gallons X density of energetic liquids (lbs/gallon)
Metric	C9.T17-2	kg of energetic liquids = liters X density of energetic liquids (kg/liter)
English	C5.T17-3	1 lb/gallon = 8.345 kg/liter
English	C5.T17-4	1 kg/liter = 0.1198 lb/gallon
English	C5.T20-1	Distance = $149.3*W^{(-0.41+0.059*\ln(W))}$
English	C5.T20-2	Distance = $24*W^{1/3}$
Metric	C9.T20-3	Distance = $34.2*W^{(-0.317+0.059*\ln(W))}$
Metric	C9.T20-4	Distance = $9.52*W^{1/3}$
English	C5.T20-5	$W = \exp[-313.18 + 206.53*(\ln(Distance)) - 49.968*(\ln(Distance))^2 + 5.5354*(\ln(Distance))^3 - 0.2119*(\ln(Distance))^4]$
Metric	C9.T20-6	$W = \exp[-130.32 + 108.79*(\ln(Distance)) - 32.587*(\ln(Distance))^2 + 4.3313*(\ln(Distance))^3 - 0.21111*(\ln(Distance))^4]$
English	C5-T22-1	Unprotected Distance = $28*W^{1/3}$
Metric	C9.T22-2	Unprotected Distance = $11.11*W^{1/3}$
English	C5-T22-3	W = $(\text{Unprotected Distance}/28)^3$
Metric	C9.T22-4	W = $(\text{Unprotected Distance}/11.11)^3$
English	C5-T22-5	Protected Distance = $-154.1 + 72.89*[\ln(W)] -6.675*[\ln(W)]^2 + 0.369*[\ln(W)]^3$
Metric	C9.T22-6	Protected Distance = $-30.62 + 19.211*[\ln(W)] -1.7678*[\ln(W)]^2 + 0.1124*[\ln(W)]^3$
English	C5-T22-7	$W = \exp[311.367 - 215.761*(\ln(\text{protected distance})) + 55.1828*(\ln(\text{protected distance}))^2 - 6.1099*(\ln(\text{protected distance}))^3 + 0.25343*(\ln(\text{protected distance}))^4]$
Metric	C9.T22-8	$W = \exp[122.38 - 108.8094*(\ln(\text{protected distance})) + 35.5517*(\ln(\text{protected distance}))^2 - 4.9055*(\ln(\text{protected distance}))^3 + 0.25343*(\ln(\text{protected distance}))^4]$
English	C5.T23-1	$D = 30W^{1/3}$
Metric	C9.T23-2	$D = 11.90Q^{1/3}$
English	C5.T23-3	NEWQD = $D^3/27{,}000$
Metric	C9.T23-4	NEWQD = D3/1,685.2
English	C5.T25-1	$d=2W^{1/3}$
Metric	C9.T25-2	$d=0.79Q^{1/3}$
English	C5.7-1	$D_{ig} = 5.8W^{1/3}$

Metric	C9.7-2	$D_{ig} = 2.30Q^{1/3}$
English	C5.7-3	$D_{ig} = 12.5f_gW^{4/9}$
Metric	C9.7-4	$D_{ig} = 5.41f_gQ^{4/9}$
English	C5.7-5	$D_{ig} = 11.1f_gW^{4/9}$
Metric	C9.7-6	$D_{ig} = 4.81f_gQ^{4/9}$
English	C5.7-7	$D_{ig} = 2.1f_gW^{4/9}$
Metric	C9.7-8	$D_{ig} = 0.91f_gQ^{4/9}$
English	C5.7-9	$f_g = 0.267w^{0.3}$
Metric	C9.7-10	$f_g = 0.11604w^{0.3}$
English	C5.7-11	$D_{id} = f_d*f_c*W^{0.4}$
Metric	C9.7-12	$D_{id} = f_d*f_c*Q^{0.41}$
English	C5.7-13	$f_d = 0.6w^{0.18}$
Metric	C9.7-14	$f_d = 0.3615\ w^{0.18}$
English	C5.7-15	$R = 149.3*D_{HYD}*((W/V_E)^{0.5}/p_{SO})^{1/1.4}$
Metric	C9.7-16	$R = 220.191*D_{HYD}*((W/V_E)^{0.5}/p_{SO})^{1/1.4}$
English	C5.7-17	$R(\theta) = R(\theta=0)/(1 + (\theta/56)^2)^{1/1.4}$
English	C5.7-18	$P_{SO} = 44.57*W^{-0.314}$
Metric	C9.7-19	$P_{SO} = 239.753*W^{-0.314}$
English	C5.7-20	$R = 131.1*D_{HYD}*(W/V_E)^{1/2.8}$
Metric	C9.7-21	$R = 48.683*D_{HYD}*(W/V_E)^{1/2.8}$
English	C5.7-22	$R = 9.91*D_{HYD}*W^{0.581}/V_E^{0.357}$
Metric	C9.7-23	$R = 4.395*D_{HYD}*W^{0.581}/V_E^{0.357}$
English	C5.7-24	$R = 161.0*D_{HYD}*(W/V_E)^{1/2.8}$
Metric	C9.7-25	$R = 59.787*D_{HYD}*(W/V_E)^{1/2.8}$
English	C5.T31-1	$f_c = 8.0178 – 0.1239*C + 27.1578*C^2 – 40.1461*C^3 + 21.9018*C^4 – 5.3529*C^5 + 0.4948*C^6$
English	C5.T31-2	$f_c = 10.8116 – 25.0685*C + 113.9591*C^2 – 168.1092*C^3 + 107.1033*C^4 – 31.5032*C^5 + 3.5251*C^6$
Metric	C9.T31-3	$f_c = 3.3794 – 0.1316*C + 72.7376*C^2 – 271.0478*C^3 + 372.7526*C^4 – 229.651*C^5 + 53.5115*C^6$
Metric	C9.T31-4	$f_c = 4.5570 – 26.6351*C + 305.2201*C^2 – 1134.995*C^3 + 1822.82*C^4 – 1351.556*C^5 + 381.2317*C^6$
English	C5.T32-1	$R(\theta)/R = [1+(\theta/56)^2]^{(-1/1.4)}$
English	C5.T34-1	$R(\theta)/(D_{HYD}/V_E^{1/1.4}) = 149.3*\{W^{0.5}/[p_{SO}(1+(\theta/56)^2)]\}^{1/1.4}$
English	C5.T34-2	$p_{SO} = 44.57*\ W^{-0.314}$
Metric	C9.T34-3	$R(\theta)/(D_{HYD}/V_E^{1/1.4}) = 149.3*\{W^{0.5}/[p_{SO}(1+(\theta/56)^2)]\}^{1/1.4}$
Metric	C9.T34-4	$p_{SO} = 239.759*\ W^{-0.314}$

English	C5.T35-1	MFR = 759 + 1251*[ln(Diameter)]
English	C5.T35-2	Diameter = exp[(MFR/1251) - 0.61]
Metric	C9.T35-3	MFR = -1002.08 + 381.305*[ln(Diameter)]
English	C5.T35-4	Diameter = exp[(MFR/381.305) + 2.628]
English	C5.T35-5	MFR = -2641 + 2998*[ln(Diameter)]
Metric	C9.T35-6	Diameter = exp[(MFR/2998) + 0.88]
Metric	C9.T35-7	MFR = -3760.859 + 913.79*[ln(Diameter)]
Metric	C9.T35-8	Diameter = exp[(MFR/913.79) + 4.1157]

AP2.3. CHAPTER 10

English/Metric	Equation Number	Equation
English	C5.T1-1	$D1 = 2*NEWQD^{1/3}$
English	C5.T1-2	$NEWQD = (D1/2)^3$
Metric	C10.T1-3	$D1 = 0.79 * NEWQD^{1/3}$
Metric	C10.T1-4	$NEWQD = (D1/0.79)^3$
English	C5.T1-5	$D2 = 6*NEWQD^{1/3}$
English	C5.T1-6	$NEWQD = (D2/6)^3$
Metric	C10.T1-7	$D2 = 2.38 * NEWQD^{1/3}$
Metric	C10.T1-8	$NEWQD = (D2/2.38)^3$
English	C5.T1-9	$D3 = 12*NEWQD^{1/3}$
English	C5.T1-10	$NEWQD = (D3/12)^3$
Metric	C10.T1-11	$D3 = 4.76 * NEWQD^{1/3}$
Metric	C10.T1-12	$NEWQD = (D3/2.38)^3$
English	C5.T1-13	$D4 = 8*NEWQD^{1/2}$
English	C5.T1-14	$NEWQD = (D4/8)^2$
Metric	C10.T1-15	$D4 = 3.62 * NEWQD^{1/2}$
English	C5.T1-16	$NEWQD = (D4/3.62)^2$
English	C5.T1-17	$D5 = 12.2*NEWQD^{1/2}$
English	C5.T1-18	$NEWQD = (D5/12.2)^2$
Metric	C10.T1-19	$D5 = 5.43 * NEWQD^{1/2}$
Metric	C10.T1-20	$NEWQD = (D5/5.43)^2$
English	C5.T1-21	$D6 = -4.49 + 0.487*(NEWQD^{1/3}) + 2.928*(NEWQD^{1/3})^2$
English	C5.T1-22	$NEWQD = (0.0833 + [1.5421 + 0.3416*D6]^{1/2})^3$
Metric	C10.T1-23	$D6 = -1.37 + 0.193*(NEWQD^{1/3}) + 1.512*(NEWQD^{1/3})^2$
Metric	C10.T1-24	$NEWQD = (0.0640 + [0.9108 + 0.6615*D6]^{1/2})^3$
English	C5.T2-1	$d = 24W^{1/3}$
Metric	C10.T2-2	$d = 9.52\ W^{1/3}$

English	C5.T2-3	$d=30W^{1/3}$
Metric	C10.T2-4	$d = 11.90\ W^{1/3}$
English	C5.T3-1	$d = 24W^{1/3}$
Metric	C10.T3-2	$d = 9.52\ W^{1/3}$
English	C5.T3-3	$d=30W^{1/3}$
Metric	C10.T3-4	$d = 11.90\ W^{1/3}$
English	C5.T4-1	$d = 24W^{1/3}$
Metric	C10.T4-2	$d = 9.52\ W^{1/3}$
English	C5.T4-3	$d=30W^{1/3}$
Metric	C10.T4-4	$d = 11.90\ W^{1/3}$