NATO INTERNATIONAL STAFF - DEFENCE INVESTMENT DIVISION

ALLIED
ENVIRONMENTAL
CONDITIONS
AND TESTS
PUBLICATION

AECTP-500
(EDITION 4)

ELECTROMAGNETIC ENVIRONMENTAL EFFECTS TEST AND VERIFICATION

AECTP-500
EDITION 4

January 2011

NATO HQ - QG OTAN
DMS 1830098
DOCUMENT

0146-11

ELECTROMAGNETIC ENVIRONMENTAL EFFECTS TEST AND VERIFICATION

AECTP 500

(Edition 4)

January 2011

INTENTIONALLY BLANK

NORTH ATLANTIC TREATY ORGANIZATION

NATO STANDARDIZATION AGENCY

NATO LETTER OF PROMULGATION

13 January 2011

1. AECTP-500 (Edition 4) – ELECTROMAGNETIC ENVIRONMENTAL EFFECTS TEST AND VERIFICATION is a non-classified NATO publication. The Agreement of Nations to use this publication is recorded in STANAG 4370.

2. AECTP-500(Edition 4) is effective upon receipt. It supersedes AECTP-500 Edition 3 which shall be destroyed in accordance with local procedures for the destruction of documents.

Cihangir AKSIT, TUR Civ
Director, NATO Standardization Agency

INTENTIONALLY BLANK

AECTP 500

INTRODUCTION

AECTP 500 is a series of categories to cover the electromagnetic environmental verification and tests for defence materiel. Category 500 provides an introduction to the different verification and tests procedures and provides a summary description of each of the other categories.

TABLE OF CONTENTS

Page

1. CATEGORY 500 INTRODUCTION…….. 500-1

2. CATEGORY 501 EQUIPMENT AND SUB SYSTEM TESTS……..…… 501-1

3. CATEGORY 502 MAN WORN AND MAN PORTABLE EQUIPMENT TESTS…. 502-1

4. CATEGORY 503 GROUND SUPPORT EQUIPMENT TEST REQUIREMENTS. 503-1

5. CATEGORY 505 AIR PLATFORMS AND SYSTEMS TESTS AND VERIFICATION……..…….. 505-1

6. CATEGORY 506 SEA PLATFORMS AND SYSTEMS TESTS AND VERIFICATION…… 506-1

7. CATEGORY 507 LAND PLATFORMS AND SYSTEMS TESTS AND VERIFICATION……..……..……..…… 507-1

8. CATEGORY 508 ORDNANCE ASSESSMENT AND TEST PROCEDURES….. 508-1

   Leaflet 1 Guidance for Testing the Electromagnetic Vulnerability of Ordnance and Weapon Systems…….. 508/1-1

   Leaflet 2 Electrostatic Discharge, Munitions Test Procedures……. 508/2-1

   Leaflet 3 Hazards of Electromagnetic Radiation to Ordnance (HERO) Test Procedure…… 508/3-1

   Leaflet 4 Lightning, Munitions Assessment and Test Procedures……508/4-1

   Leaflet 5 Nuclear Electromagnetic Pulse Test Procedure for Munitions Containing Electrically Initiated Devices…….…… 508/5-1

9. CATEGORY 510

   Leaflet 1 Electromagnetic Shielded Enclosures Test Procedures…… 510/1-1

   Leaflet 2 Use of Low Power Transmitters Close to Ordnance Items…..… 510/2-1

CATEGORY 500

INTRODUCTION TO ELECTROMAGNETIC ENVIRONMENTAL VERIFICATION AND TESTS

1 INTRODUCTION 500-3

1.1 Category 501 – Equipment and Sub System Testing 500-3
1.2 Category 502 – Man Worn and Man Portable Equipment Testing 500-3
1.3 Category 503 – Support Equipment Testing 500-3
1.4 Category 504 –This category is not used at present. 500-3
1.5 Category 505 – Air Platform and System Verification and Testing 500-3
1.6 Category 506 – Sea Platform and System Verification and Testing 500-4
1.7 Category 507 – Land Platform and System Verification and Testing 500-4
1.8 Category 508 – Ordnance/Munitions Verification and Testing 500-4
1.9 Category 509 – Space 500-4
1.10 Category 510 - Miscellaneous 500-4

2 SCOPE 500-4

2.1 Purpose 500-4
2.2 Application 500-5
2.3 Limitations 500-5
2.4 The Impact of Commercial Off the Shelf (COTS) / Military Off the Shelf (MOTS) 500-7

3 GUIDANCE 500-7

3.1 Objectives of the Test Program 500-7
3.2 Management and Planning Procedures 500-7
3.3 Environmental Considerations 500-8
3.4 Electromagnetic Parameter / Requirement Levels 500-8
3.5 Interface Requirements 500-9

4 TESTING 500-12

4.1 Test Item Configuration 500-12
4.2 Test Conditions 500-12
4.3 Information Required 500-12
4.4 Failure Criteria 500-13

5 APPLICABLE DOCUMENTS 500-155

5.1 Referenced 500-15
5.2 Information Only 500-15

6 ACRONYMS 500-15

7 DEFINITIONS 500-16

ANNEX A Risk Assessment of COTS / MOTS Procurement……..…500-A1

FIGURES

Figure 500-1 Risk Assessment of COTS / MOTS Procurement Main Flow Chart 500-A2

Figure 500-2 Define Environment Flow Chart.....500-A3

Figure 500-3 Evaluate EMC Specification Flow Chart 500-A4

Figure 500-4 Assess Risk against Functional Criticality Flow Chart 500-A7

Figure 500-5 Mitigate Risk Through Design and / or Retest Flow Chart.....500-A9

TABLES

Table 501-1 Default Performance Criteria Guide 500-14

Table 500-1 EMC GAP Analysis Factors Affecting Test Severity 500-A6

Table 500-2 Guide to Minimum Acceptable Risk Resulting from EMC Gap Analysis....500-A8

CATEGORY 500

Electromagnetic Environmental Verification and Tests

1 INTRODUCTION

AECTP 500 is one of six documents called up by STANAG 4370 Environmental Testing [Ref 1]. Its most common application is for ensuring the resistance of materiel to electromagnetic effects.

The documents in AECTP 500 contain generic procedures that are to be tailored for the specific test program.

Each category listed below gives verification and test methods suitable for the application described. Those responsible for procuring, designing and testing equipments and systems need to define which categories and which verification / tests in each category are applicable to the project. All methods listed are not to be applied indiscriminately, but rather selected for application as required.

In developing a verification / test program, consideration must be given to the anticipated life cycle of the materiel. The cumulative damage caused by long-term exposure to various environments and the associated changes in resistance to electromagnetic effects must be taken into account. The interface with the appropriate platforms must also be accounted for.

The procedures herein provide reasonable verification of the item's performance and resistance to Electromagnetic Environmental (E3) effects. The tests particularly at an equipment level are not necessarily intended to duplicate the environment. Where possible, guidance on limitations or intended applications is provided.

The use of measured data is recommended whenever data are available.

1.1 Category 501 – Equipment and Sub System Testing

This Category contains test procedures for use with equipments and sub-systems that can generally be tested in a screened room. The tests are necessary to reduce the risk of Electromagnetic Interference (EMI) problems when equipments are integrated into an overall system and before full system level testing can be undertaken.

1.2 Category 502 – Man Worn and Man Portable Equipment Testing

This category contains test procedures for man worn and man portable equipment that can be tested in a screen room. The test procedures require the use of a mannequin to simulate the “mounting” arrangement of man worn equipments and a wooden bench for man portable equipment.

1.3 Category 503 – Support Equipment Testing

This category's aim is to foster international co-operation and agreement in controlling Support Equipment electromagnetic interference across all 3 services (Air, Land and Sea) by establishing the minimum test methods to be applied in the evaluation of Electromagnetic Compatibility (EMC).

1.4 Category 504 – Introduction to Platform and System Verification and Test.

This category details the common E3 requirements to support the E3 test and verification program detailed in categories AECTP 505 (Air), 506 (Sea) and 507 (Land). The category is applicable for complete systems both new and

1.5 Category 505 – Air Platform and System Verification and Testing

This category covers the requirements for Air Platform and System testing and hardness verification (based on STANAG 7116).

1.6 Category 506 – Sea Platform and System Verification and Testing

This category provides guidance, specific requirements and detailed procedures for conducting EMI testing of Sea Platforms and Systems

1.7 Category 507 – Land Platform and System Verification and Testing

This category provides guidance to ensure the design and engineering of Tactical Land Platforms and Systems meet there performance requirements through an E3 Test and Verification Program.

1.8 Category 508 – Ordnance/Munitions Verification and Testing

This category contains leaflets covering verification and tests of munitions systems containing Electrically-Initiated Devices (EIDs) against the following environments:

Leaflet 1	Ordnance Electromagnetic Vulnerability of a complete munitions system containing electronics
Leaflet 2	Electrostatic Discharge (based on STANAG 4239 & AOP 24)
Leaflet 3	Electromagnetic Radiation (based on STANAG 4234)
Leaflet 4	Lightning (based on STANAG 4327 & AOP 25)
Leaflet 5	Nuclear Electromagnetic Pulse (based on STANAG 4416)

1.9 Category 509 – Space

This category has been reserved to cover the requirements for space (vehicles and terrestrial stations) in the future.

1.10 Category 510 - Miscellaneous

At the present time this category contains a leaflet covering Electromagnetic Shielding Enclosures Test Procedures.

Further leaflets under consideration for inclusion, include Through Life Testing.

2 SCOPE

2.1 Purpose

This document is intended to cover general and specific requirements relating to the development and implementation of a complete test / verification program for all materiel characterised as electronic, electrical and electromechanical. Tests and Verification guidance are provided at Platform, System and Subsystem Equipment levels.

The general purpose is:

a. To state the overall test / verification objectives for the validation of materiel design, within the electromagnetic environment.

b. To provide general guidance for management of a test / verification program for the electromagnetic environment and to provide guidance in the selection of tests

c. To outline the necessary processes and products of the Test / Verification Program including Test Procedures, Data collection and assessments to achieve acceptable compliance to EMI/EMC Test / Verification requirements..

The specific purpose is:

To provide background information under the heading ‘discussion’ for general requirements and applicability for detailed test / verification requirements. This information includes rationale for

requirements, guidance in applying the requirements, and lessons learned from platform and laboratory experience. This information should help users understand the intent behind the requirements. In addition it should aid the procuring activity in tailoring emission and susceptibility requirements as necessary for particular applications. Additionally it should help users develop detailed test procedures in the Electromagnetic Interference Test Procedure (EMITP) based on the general test procedures in this document. This background information is provided for guidance purposes and, as such, should not be interpreted as providing contractual requirements.

2.2 Application

The AECTP 500 series of documents includes information on the following topics:

a. Test Program development

b. Applicability of each test

c. Test Methodology

d. Parameter levels for the tests

e. Characteristics of Test Facilities

f. Test Item configuration

g. Test Conditions

h. Pre and Post-test checks of the test item

i. Test Products including Plans, Data and Reports

j. Failure criteria.

2.2.1 Materiel Containing Electrically Initiated Devices (EID)

Category 508 describes guidance for testing the Electromagnetic Vulnerability (EMV) of ordnance and weapon systems. It also contains test and verification requirements for materiel containing EIDs.

In general equipment / sub-system EMC tests in accordance with **Categories 501** or **502** will also be necessary.

2.2.2 Combined Testing

The tailoring process in AECTP100 Environmental Guidelines for Defence Materiel [Ref 2] may identify a need to combine electrical/electromagnetic environmental testing with other environments in the AECTP 300 Climatic Environmental Tests [Ref 3] and AECTP 400 Mechanical Environmental Tests [Ref 4] series. Such combinations may produce a more realistic representation of the effects of the overall environment than a series of single tests.

2.2.3 Materiel (Whole System) Testing and Verification

Whole system testing and verification may be applicable to very large systems which can only be tested in situ or, more generally to complete platforms. **Categories 505**, **506**, **507** and **508** cover these requirements.

2.3 Limitations

2.3.1 Hazards of Electromagnetic Radiation to Personnel (HERP)

The AECTP 500 series does not address HERP requirements, although **Category 507** offers HERP Survey guidance for the evaluation of Land Platforms and Systems.

2.3.2 Hazards of Electromagnetic Radiation to Fuels (HERF)

This edition of AECTP 500 series does not address HERF requirements.

2.3.3 Test item

Test methods suitable for component level testing are not given in the AECTP 500 series.

Discussion: However components within equipment or systems should be selected from those believed able to perform the design function over the whole life cycle including its environmental elements. Testing can provide evidence to support selection. Components likely to be exposed to abnormal environments need to be identified and special testing may need to be devised. Other issues to address may include the component's susceptibility to Electro-Static Discharge or ESD, ESD packaging and handling requirements, and the long term availability of components particularly integrated circuits.

When demonstrated that a commercial item selected by the equipment developer is responsible for equipment or a systems failing to meet EMC requirements, then either the commercial item shall be modified or replaced or interference suppression measures shall be employed, so that the equipment or system meets the EMC requirements. See ***Clauses 3.5.4.1.1*** *to* ***3.5.5*** *for additional requirements.*

2.3.4 Environment

The electromagnetic environment that materiel could encounter throughout their life cycle may be self-generated, generated by other materiel, or generated by natural phenomena. The total environment at any particular phase of the materiel life cycle may be composed of any combination of environments from these sources. In general, concurrent electrical/electromagnetic environmental testing is not performed, and the test procedures within AECTP 500 relate to separate environments or their effects.

Discussion: The test parameters and their levels must be chosen to provide repeatable simulation of the 'real' environments. For natural phenomena, levels are often adopted that correspond to those that the materiel could conceivably encounter, and not necessarily to the worst possible cases. For self-generated and externally generated environments, levels shall either be specified by the adoption of standards or shall be derived from the knowledge of the likely external environment. The latter option is preferable when the external environment is known to be severe. AECTP 250 Electrical / Electromagnetic Environmental Conditions [Ref 5], provides guidance on all aspects of the electrical/electromagnetic environment which may be experienced in various scenarios. This guidance can be used to establish necessary test levels but tailoring will frequently be required where the use of a particular equipment or system is known to vary from the generalised assumptions made in [Ref 5].

2.3.5 Lightning

The testing of equipments and systems to all aspects of the lightning threat is not fully covered in the AECTP 500 series. The coverage currently included/excluded is as follows:

a. Indirect effects: (i.e. induction of currents in cabling due to lightning striking the platform/platform structure) Conducted Susceptibility Test Method NCS10 in AECTP 501 has been specifically designed to cover this threat for air platform equipment. Test Methods NCS08 and NCS09 although not specifically designed to cover the lightning threat, give some confidence that equipment for Land or Sea Platforms will not be susceptible to indirect effects transients caused by lighting striking.

   Category 508 leaflet 4 covers indirect effects testing for weapon systems/equipments.

b. Direct effects:

   See AECTP Category 504 for System and Platform requirements.

   Testing is covered comprehensively for weapon systems in Category 508/4. This addresses possible damage mechanisms due to burn through, hot spots, dielectric puncture and mechanical stresses.

Discussion: For the present National Procedures should be applied for all other applications.

2.4 The Impact of Commercial Off the Shelf (COTS) / Military Off the Shelf (MOTS)

The push towards the use of COTS and MOTS equipment could lead to systems that are more vulnerable if incorrectly assessed. Overall most COTS equipment has been designed to meet less stringent Electromagnetic Environment (EME) requirements than military equipment and could therefore be more vulnerable to upset or damage when exposed to high level RF fields or could interfere with legacy systems. MOTS equipment may not meet the full severity of any contractual EMC requirement. Therefore the use of COTS/MOTS introduces additional risk of an incompatibility plus associated extra costs, in maintaining performance throughout the system life cycle and for re-use in other scenarios. For equipment that is to be used in safety critical/related systems or environments then the decision to use COTS/MOTS and the risk mitigation shall be recorded in the systems safety case.

A method of assessing the risk of procuring COTS/MOTS is provided in **Annex A**.

3 GUIDANCE

Categories 501 to **503** contain generic test procedures that may be applied to any type of materiel at the equipment/subsystem level. The test procedures to be used for a specific test program shall be selected based on operational use and environmental conditions expected to be experienced during the lifetime of the materiel. The selection of some test procedures in **Category 501** (**Clause 5.2** and Applicability **Tables 501-6** and **501-7** in particular) and **502** (**Clause 5.2** and Applicability **Tables 502-1** and **502-2** in particular) will be dependent on the procuring nation.

3.1 Objectives of the Test Program

The objectives of the program shall be to demonstrate, where appropriate, that the materiel:

a. Will not unacceptably interfere with, perturb or damage other materiel when operating as intended.

b. Will not unacceptably interfere with, perturb or damage its own components or equipment when operating as intended.

c. Will not be unacceptably perturbed or damaged by external environments, whether generated by other materiel, by humans or by natural phenomena.

d. Will not unacceptably endanger personnel during those phases of the materiel life cycle in which either the materiel could produce discharges or emissions of an electrical or electromagnetic nature, or the materiel could be affected by external environments with adverse consequences.

3.2 Management and Planning Procedures

3.2.1 EMC Specification

It is the program manager's responsibility to ensure that the test item requirement document for the materiel is used as the basis for the development of an electromagnetic compatibility specification for the materiel. The test requirement document shall contain environmental statements, design requirements for the protection of Platforms, Systems, Equipment and Subsystems and compliance criteria. For complex materiel, an Electromagnetic Compatibility Control Plan (EMCCP) is needed to identify management responsibilities to ensure EMC requirements in the specification are addressed, to ensure a cost effective EMC Program to demonstrate compliance is developed and to provide a consistent review procedure.

3.2.2 EMC Test Program and Plans

An EMC Test Program Plan shall be developed for the materiel including all components and subsystems, where appropriate. The Plan shall be sufficiently detailed to enable any test to be

repeated with the same results. The Plan shall cover both development and acceptance testing up to and including system testing. The EMC Program Plan shall define:

a. The Contractor EMI/C Management Structure (as appropriate)

b. The equipment, Subsystem, System or Platform which will be tested and test schedule

c. The nature or purpose of each test

d. The Mode(s) of Operation of the equipment under test

e. The signal modulation to apply during susceptibility testing, as required

f. The functional tests / trials and inspections to be performed before, during and after each EMC test / trial procedure.

g. The facility to be used (if required) and the support equipment needed for the test.

h. Data recording methodologies including test configuration description/photographs, analysis and reporting to be used.

Individual EMI/EMC Test / Trial Procedures to demonstrate compliance shall be prepared.

3.3 Environmental Considerations

The most realistic approach for testing materiel under simulated electromagnetic environments would be to expose the test item in a deployed and functional state under those conditions in which NATO and national forces would operate it (i.e. using the approach in Categories 505, 506 or 507). Some land-based materiel could be tested using such an approach. Air and ship-borne materiel are more difficult to deploy in realistic conditions since for the most part land-based test facilities are used. Suspending or isolating the test item in free space may represent an aircraft in flight or a ship's decks or by using a conducting ground plane upon which the test item stands. More difficult still are types of materiel that form an interconnected part of an extensive system or are installed on or within a building, or large mobile platform. Testing in the natural environment (i.e. Open Air Test Sites or OATS) may not be possible for all materiel. It also may be precluded for reasons of intolerable, possibly illegal, interference with test site neighbours. Where the materiel is to be divided into its equipment or subsystems levels, environmentally protected test facilities are essential.

3.3.1 Program schedule

Subsystem EMC testing (Categories 501, 502 or 503) should be completed before integrated system testing is undertaken (Categories 505, 506, 507 or 508). Testing the integrated system may uncover deficiencies not revealed during subsystem testing.

3.4 Electromagnetic Parameter / Requirement Levels

3.4.1 Parametric Considerations

In determining test parameters/requirements, consideration shall be given to:

a. Anticipated external life cycle environments and whether or not modified by other materiel in or on which the materiel is placed.

b. Induced environments where the external environment is modified by other materiel in or on which the considered materiel is placed.

c. Internal environments that the materiel produces by its own operation within the life cycle.

3.4.2 Tailoring of Parameters/Requirements

Parameters/requirements should be tailored in accordance with the functional criticality of the materiel (see **Figure 500-4**) its life cycle, its interaction with other materiel and the derived electromagnetic environment. The logic for tailoring shall be included in either the EMC specification, EMCCP or the EMITP. The selection of parameters should be based preferably on direct environmental measurements made under real life cycle situations. The alternative is to use derived levels, which can

be obtained either by assessment or by reference to data collected during test programs completed on similar types of materiel.

3.5 Interface Requirements

3.5.1 Joint Procurement

Equipment or subsystems procured by one user activity for multi-agency or multi nation's use shall comply with the requirements of the user agencies.

Discussion: When a government procures equipment that will be used by more than one service, agency or Nation, a particular activity is assigned responsibility for overall procurement. The responsible activity must address the concerns of all the users. Conflicts may exist among the parties concerned. Also, imposition of more severe design requirements by one party may adversely affect other performance characteristics required by the second party. For example, severe radiated susceptibility levels on an electro-optical sensor may require aperture protection measures which compromise sensitivity. It is important that all issues be resolved to the satisfaction of all parties and that all genuine requirements be included.

3.5.2 Filtering (Navy only)

The use of line-to-ground filters for EMI control shall be minimised. Such filters establish low impedance paths for structure (common-mode) currents through the ground plane and can be a major cause of interference in systems, platforms, or installations because the currents can couple into other equipment using the same ground plane. If such a filter must be employed, then the line-to-ground capacitance for each line shall not exceed 0.1 µF for 60 Hz equipment or 0.02 µF for 400 Hz equipment. This will in turn limit the power line current to 5 mA which is consistent with leakage current (safety) requirements. For submarine DC-powered equipment and aircraft DC powered equipment, the filter capacitance from each line-to-ground at the user interface shall not exceed 0.075 µF/kW of the connected load. For DC loads less than 0.5 kW, the filter capacitance shall not exceed 0.03 µF. The filtering employed shall be fully described in the equipment or subsystem technical manual and in the EMCCP.

Discussion: The power systems for Navy ships and submarines are ungrounded. The capacitance-to-ground of power line filters provides a path for conducting current into the hull structure. The Navy uses very sensitive low frequency radio and sonar receivers. At low frequencies, currents flowing through the installation structure and across surfaces of electronic enclosures will penetrate to the inside of the enclosure. The magnetic fields created by these currents can couple into critical circuits and degrade performance. At higher frequencies (greater than 100 kHz), the combination of power line filter capacitance-to-ground limitation, skin effect of equipment enclosures, and reduced harmonic currents tend to minimise the problems associated with structure currents.

3.5.3 Self-Compatibility

The operational performance of an equipment or subsystem shall not be degraded, nor shall it malfunction, when all of the units or devices in the equipment or subsystem are operating together at their designed levels of efficiency or their design capability.

Discussion: The EMI controls imposed by this standard apply to subsystem-level hardware with the purpose of insuring compatibility when various subsystems are integrated into a system platform. In a parallel sense, a subsystem can be considered to be an integration of various assemblies, circuit cards, and electronics boxes. While specific requirements could be imposed to control the interference characteristics of these individual items, this standard is concerned only with the overall performance characteristics of the subsystem after integration. Therefore, the subsystem itself must exhibit compatibility among its various component parts and assemblies.

3.5.4 Non-Developmental Items (NDI)

In accordance with the guidance provided by the procuring Government, the requirements of this standard shall be met when applicable and warranted by the intended installation and platform requirements.

Discussion: NDI refers to any equipment that is already developed and ready for use including both commercial and military items. Acceptance in the commercial marketplace does not mean that EMC requirements are met and modifications to correct EMC problems can be costly and time consuming. EMC problems that arise from NDI equipment can be potentially hazardous. Quantitative EMC requirements should be developed and valid data needs to be gathered during a market investigation to allow an analysis to determine the suitability of the NDI. Testing may be required if there is insufficient data. An EMC advisory board is recommended to provide alternatives to the procuring authority.

It is common for Nations to use commercially available medical devices onboard aero medical evacuation aircraft. This equipment needs to undergo a suitability assessment which involves determining the environmental and EMI characteristics of the equipment for review by flight certification and medical equipment safety personnel. A basic methodology has been established as described below for the EMI portion of this assessment.

The AECTP requirements that are evaluated are NCE02, NCS01, NCS14, NCS15, NCS16, NRE02, and NRS03 with the addition of NCE01 for the Army. Depending on whether aircraft power or battery operation is used and the type of electrical interfaces, if any, will influence whether NCE01, NCE02, NCS01, NCS14, NCS15, and NCS16 are necessary, as is the case with any equipment. NCS14 Curve 3 and the NRS03 requirement of 20 V/m from 2 to 1000 MHz and 60 V/m levels from 1 to 18 GHz are treated as anticipated nominal performance levels. NCS14 Curve 5 and 200 V/m measurements for NRS03 are performed for severe helicopter evaluations; however, the results are assessed using risk analysis oriented toward patient safety, absolute performance is not expected and often does not result across the frequency range of interest.

National authorities are responsible for airworthiness testing and certification of medical carry-on equipment for use on aircraft. Evaluation of emission results (which would be an aircraft safety issue) is the responsibility of the airworthiness National authority or their Agent since “General Flight Rules” require emissions testing of portable electronic devices to ensure aircraft safety.

National authorities are also responsible for assessing patient safety issues related to susceptibility results. Since medical equipment often does not totally meet requirements, technical assessment of the results determines if the equipment can be used without endangering the aircraft or unduly affecting patient care. Aircraft level assessments are sometimes used to supplement the EMI results.

3.5.4.1 Commercial Items

See **Clause 2.4** and **Category 503** for guidance on the procurement of Commercial Off the Shelf (COTS) and Military Off the Shelf (MOTS) equipment.

Discussion: The use of COTS equipment presents a dilemma between the need for EMI control with appropriate design measures implemented and the desire to take advantage of existing designs, which may exhibit undesirable EMI characteristics. ***Clauses 3.5.4.1.1*** *and* ***3.5.4.1.2*** *address the specific requirements for the two separate cases of contractor selection versus procuring activity specification of commercial equipment.*

For some applications of commercially developed products, such as commercial transport aircraft, EMI requirements similar to those in this standard are usually imposed on equipment. Most commercial aircraft equipment is required to meet the EMI requirements in RTCA DO-160 [Ref 6] or an equivalent contractor in-house document. Recent revisions to Ref 6 are making the document more compatible with AECTP 500. Equipment qualified to revisions “C” or “D” of [Ref 6] is often suitable for military aircraft applications.

EMI requirements on most commercial equipment are more varied and sometimes non-existent. The minimum EMI requirements shall be those pertaining to the commercial regulations for the countries which the equipment shall be deployed in. These requirements are typically less stringent than military requirements of a similar type. Also, there is difficulty in comparing levels between commercial and military testing due to differences in measurement distances, different types of antennas, and near-field conditions.

3.5.4.1.1 Selected by Contractor

When it is demonstrated that a commercial item selected by the contractor is responsible for equipment or subsystems failing to meet the contractual EMI requirements, then the commercial item shall be modified or replaced or interference suppression measures shall be employed, so that the equipment or subsystems meet the contractual EMI requirements.

Discussion: The contractor retains responsibility for complying with EMI requirements regardless of the contractor's choice of commercial off-the-shelf items. The contractor can treat selected commercial items as necessary provided required performance is demonstrated.

3.5.4.1.2 Specified by Procuring Activity

When it is demonstrated by the contractor, that a commercial item specified by the procuring activity, for use in an equipment or subsystem is responsible for failure of the equipment or subsystem to meet its contractual EMI requirements, the data indicating such failure shall be included in the Electromagnetic Interference Test Report (EMITR). No modification or replacement shall be made unless authorised by the procuring activity.

Discussion: The procuring activity retains responsibility for EMI characteristics of commercial items that the procuring activity specifies to be used as part of a subsystem or equipment. The procuring activity will typically study trade-offs between the potential for system-level problems and the benefits of retaining unmodified commercial equipment. The procuring activity needs to provide specific contractual direction when modifications are considered to be necessary.

3.5.4.2 Procurement of Equipment or Sub-Systems having met other EMI requirements

Procurement of equipment and subsystems electrically and mechanically identical to those previously procured by activities of agencies, or their contractors, shall meet the EMI requirements and associated limits, as applicable in the earlier procurement, unless otherwise specified by the Command or agency concerned.

Discussion: In general, Nations expects configuration controls to be exercised in the manufacturing process of equipment and subsystems to ensure that produced items continue to meet the particular EMI requirements to which the design was qualified. This category of the standard reflects the most up-to-date environments and concerns. Since the original EMI requirements may be substantially different from those in this category of the standard, they may not be adequate to assess the suitability of the item in a particular installation. This situation most often occurs for equipment susceptibility tests related to the radiated electromagnetic environment. Procuring activities should consider imposing additional test requirements on the contractor to gather additional data to permit adequate evaluation.

Testing of production items has shown degraded performance of the equipment from that previously demonstrated during development. One problem area is engineering changes implemented for ease of manufacturing which are not adequately reviewed for potential effects on EMI control design measures. Specific problems have been related to treatment of cable and enclosure shields, electrical grounding and bonding, and substitution of new component parts due to obsolescence.

3.5.5 Government Furnished Equipment (GFE)

When the contractor demonstrates that a GFE is responsible for failure of an equipment or subsystem to meet its contractual EMI requirements, the data indicating such failure shall be included in the EMITR. No modification shall be made unless authorised by the procuring activity.

Discussion: GFE is treated the same as commercial items specified by the procuring activity.

3.5.6 Interchangeable Modular Equipment

The requirements of this standard are verified at the Shop Replaceable Unit, Line Replaceable Unit, or Integrated Equipment Rack assembly level. When modular equipment such as line replaceable modules are replaced or interchanged within the assembly additional testing or a similarity assessment is required and shall be approved by the procuring activity.

Discussion: Different equipment with the same Form, Fit and Function characteristics may have the potential for different EMI profiles, thus resulting in interchangeability issues. Additionally, more subsystems and equipment are being designed and built by more than one manufacturer. Different manufacturer's unique designs such as filter placement on the motherboard or module, general board design/circuit layout, compatibilities of Inputs/Outputs at higher frequencies, component tolerances, board proximity, etc., will affect the electromagnetic interference characteristics of the equipment. Therefore, testing of all possible configurations or a detailed analysis assessing the design configuration changes is required.

4 TESTING

4.1 Test Item Configuration

The test item configuration should be the actual materiel configuration at the appropriate phase of the life cycle. As a minimum, the following configurations shall be considered:

a. The materiel by itself in an operating or active mode.

b. Materiel contained in any shipping or transit casing where the casing should be assessed for electromagnetic shielding against the environment, including any grounding provisions.

c. The materiel in a test mode where other equipment or materiel is connected to it. Conduct of the test procedures shall consider the potential safety hazards to test personnel. In particular, inadvertent initiation of energetic materials by electro-ignition and other hazardous electrical/mechanical reactions that could be induced by the testing should not be possible.

4.2 Test Conditions

4.2.1 Climatic Conditions for Testing

Tests / Trials made on Platform, Systems, Subsystems or Equipment are usually made in uncontrolled climatic conditions or within test facilities where the range of the climatic conditions is limited. The procedure for conducting electrostatic charge/discharge testing must include a consideration of climatic parameters.

4.2.2 Electrical/Electromagnetic Test Conditions

Test conditions are given in each of the appropriate test procedures of the AECTP500 categories.

4.2.3 Tolerances, Data and Recording

Unless otherwise specified, the test equipment and auxiliary instrumentation shall be capable of maintaining the prescribed test parameters (both input and output) within prescribed tolerances. Data shall be recorded either manually or automatically during testing / trials, including any observation as to upset, perturbation or damage to equipment. For emissions measurements, amplitude versus frequency profiles of emission data shall be recorded on an automatically generated continuous plot. The applicable parameter/requirement limit shall be displayed on the plot. Manually gathered emissions data is not acceptable except for plot verification. See also AECTP 501 **Clause 4.3.1** for further information on measurement tolerances.

4.3 Information Required

The following clauses list the minimum essential information on pre and post test / trial status of the materiel.

4.3.1 Pre Test / Trial Information

a. Test item description (make, model, serial number etc.)

b. Test item configuration

c. Appropriate test / trial procedure to be applied

d. Objectives of the test / trial and acceptance criteria

e. Test equipment to be used (make, model, serial number, calibration, etc.)

f. Cable types if applicable

g. Defect recording and rectification

h. Results of pre-test / trials operational check

i. Date for Test / Trial(s)

j. Test Personnel

k. Test Organisation, Test House or Test / Trial Location

4.3.2 Post Test / Trial Information

a. Test item responses to procedures

b. Deviations from planned test / trial procedures and their affect on test / trial acceptability

c. Records of ambient test conditions other than those associated with the Methods used

d. Observations of defects, upsets, perturbation or damage and their location during the test, / trial and an evaluation of the problem

e. Investigation of damage at the component level.

f. Test equipment used (make, model, serial number, calibration, etc.)

g. Date of Test /Trial

h. Test Personnel

i. Test Organisation, Test House or Test Location

4.3.3 Test / Trial Report

The information shall be collated into a test / trial report.

4.4 Failure Criteria

4.4.1 Failure

Any one of the following conditions shall normally constitute a test item failure:

a. Deviation of the monitored output parameter beyond the requirement levels established in the EMC specification for the materiel or for the Platform, System, Subsystem or Equipment, which constitute the materiel.

b. Observation of transient phenomena or damage likely to lead to the development of a safety hazard associated with the material.

c. Observation of transient phenomena or damage likely to lead to preventing the materiel from meeting its specified performance at some phase in the life cycle.

4.4.2 Degraded Performance Susceptibility Criteria

In order that the test engineer can determine the threshold during conducted or radiated susceptibility testing the criteria for malfunction must be stated in the Test / Trial Procedure or agreed in writing prior to testing based on the following performance criteria.

a. Performance Criterion A

Susceptibility criteria associated thresholds or tolerances, and applied modulation characteristics shall be approved by the Procuring Agency in advance of the Test Program.

b. Performance Criterion B

Measurable susceptibility criteria shall be used to the maximum extent possible over visual monitoring or inspections of the EUT during real-time or post test verification.

c. Performance Criterion C

Susceptibility criteria shall be developed for each EUT Mode of Operation under evaluation. Any such loss of function during testing shall be recorded in the Test / Trial Report.

d. Performance Criterion D

Loss of function is allowed during each test provided the function can be restored by the manual operation of the controls at the end of the test and no permanent damage occurs. The allowable loss of function shall be stated in the EMC Test/ Trial Procedure. Any such loss of function during testing shall be recorded in the Test / Trial Report.

Table 500-1 provides the default performance criteria to be applied dependent on the criticality of the equipment function. The equipment function criticality category is determined during the system safety assessment. The definitions of criticality are given in **Clause 7**.

If the threshold level differs between raising and lowering of the interference signal, the upper and lower level threshold shall be recorded (Hysteresis effect).

When auxiliary test instrumentation is used for monitoring EUT e.g. oscilloscopes or digital voltmeters, steps must be taken to exclude the RF test signal induced into the output leads of the EUT from the monitoring circuit so that the output signal can be monitored without disturbance. Where ever possible fibre optic cables should be used. The method used for correct monitoring of the EUT output shall be detailed in the Test / Trial Procedure / Report.

Following transient susceptibility testing a check shall be made to ensure that no damage to filters or other components has been made which would affect NCE01 results. As a minimum therefore NCE01 shall be performed after all transient susceptibility testing has been completed

Susceptibility Test	Safety Critical / Safety Related Function	Mission Critical Function	Non-safety Critical (Non-essential) Function[1]
NCS01	A	A	A
NCS02	A	A	A
NCS07	A	A	A
NCS10	A	C	D
NCS11	A	C	D
NCS12	A	B	B
NRS01	A	A	A
NRS02	A	A	A
NRS04	A	A	A

[1] Performance Criteria A is specified for non-safety critical functions where the interference conditions may be continuously present.

Table 501-1 Default Performance Criteria Guide

4.4.3 Retest / Retrial

Retesting of the EUT / Platform /System will take place in the event that:

a. The EUT has been repaired or redesigned as a result of a previous test failure. In such circumstances, where compliance can be assured, it is permissible to re-test only those parts of the EMI Test Program where failures occurred.

b. The test / trial procedure is not followed correctly or the EUT has been configured incorrectly. This includes where the EUT is operated differently to that previously agreed with the procuring authority or to how it would operate in its normal installation. In such circumstances all testing undertaken will be repeated with the EUT in the correct configuration.

4.4.4 Comments

A commentary on all test / trial failures observed shall be made within the test report. If further assessment is necessary, it shall be included in any overall EMC final report on the materiel.

5 APPLICABLE DOCUMENTS

5.1 Referenced

Ref 1 STANAG 4370 Environmental Testing

Ref 2 AECTP100 Environmental Guidelines for Defence Materiel

Ref 3 AECTP 300 Climatic Environmental Tests

Ref 4 AECTP 400 Mechanical Environmental Tests

Ref 5 AECTP 250 Electrical / Electromagnetic Environmental Conditions

Ref 6 RTCA DO-160

5.2 Information Only

AEP 41	Unified Electromagnetic Effects (UE3) Protection
Def Stan 59-411 Part 5	Code of Practice for Tri Service Design and Installation

6 ACRONYMS

The following acronyms are used:

COTS	Commercial Of The Shelf
E3	Electromagnetic Environmental
EID	Electrically-Initiated Devices
EM	Electromagnetic
EMC	Electromagnetic Compatibility
EMCCP	Electromagnetic Compatibility Control Plan
EME	Electromagnetic Environmental
EMITP	Electromagnetic Interference Test Plan
EMITR	Electromagnetic Interference Test Report
GFE	Government Furnished Equipment
MOTS	Military Of The Shelf

NDI	Non Development Item
OATS	Open Area Test Site
RADHAZ	Radio and Radar Radiation Hazard

7 DEFINITIONS

EID

Any single shot component or sub-assembly initiated by electrical means and having an explosive, pyrotechnic, or mechanical output resulting from an explosive, pyrotechnic, laser or electrothermal action.

Mission Critical

A characteristic or function of an equipment or system in which a failure can cause the task or operation demanded from the material to be abandoned or severely impaired.

Safety Critical

A characteristic or function of an equipment or system in which a failure or malfunction may cause a direct hazard to personnel and/or loss of materiel.

Safety Related

A characteristic or function of an equipment or system whose correct operation contributes to the safety of personnel or material.

ANNEX A

Risk Assessment of COTS/ MOTS Procurement

It is essential that the Equipment Electromagnetic (EM) Managers seek the agreement of the Platform or Facilities EM Manager before the risk assessment procedure is used. This is because the Platform or Facilities EM Manager will carry the risk and any associated extra costs through the whole life of the project. For safety critical/related equipment, platforms or facilities (such as Aircraft, Submarines and fire detection systems) this prior agreement must be in writing and added to the safety case along with any mitigation.

The risk assessment method is described in a series of flowcharts and tables. The main flowchart is shown in **Figure 500-1**. Each of the main flowchart processes is expanded into separate flow charts shown in **Figure 500-2** through to **Figure 500-5**. A description of the main processes and considerations is given here.

A.1 Define Environment: (Figure 500-2)

In order to evaluate the acceptability of the COTS/MOTS EMC performance, it is necessary to define the electromagnetic environment (EME) in which the equipment will be operated. If the EME is to be derived for a new scenario then refer to [Ref 5]. For existing platforms the EME may already be defined or may be represented by the service categories and limits given in **Categories 501**, **502** and **503**.

A.2 Evaluate EMC Specification and Compliance Evidence: (Figure 500-3)

This process or gap analysis identifies the shortfalls in the existing EMC performance of the COTS/MOTS equipment. In order to achieve this, the EMC standards, test methods and limits applied to the COTS/MOTS equipment must be identified and compared to the equivalent test given in **Categories 501** and **502**. The detailed comparison of test methods is complex and **Table 500-2** provides guidance on the relevant factors to be considered. Once the gaps and missing tests have been identified they can be assigned a risk rating- of Low, Medium or High depending on the extent of the deviation.

A.3 Assess Risk against Functional Criticality: (Figure 500-4)

The risks identified in the previous process must now be compared to the criticality of the COTS/MOTS equipment and the criticality of the environment or platform in which the COTS/MOTS equipment will be operated. Nil to Low risk will generally be acceptable. In some non-critical situations Low to Medium risk may be acceptable. In all cases a High risk is unacceptable unless some mitigating action is applied.

A.4 Mitigate Risk through Design and/or Retest: (Figure 500-5)

This process comprises two options:

a. Test the COTS/MOTS equipment to determine compliance with this Standard. Refer to **Categories 501** and **502** for the test requirements and **Categories 505**, **506** or **507** for the appropriate platform requirement. This is technically a good approach as any subsequent required protection can be properly specified and over-protection will be avoided. However the disadvantage of this approach is the cost implications of the additional testing required.

b. Remedial design can be achieved by adding the appropriate protection “barriers” to reduce the “worst case” coupled RF fields or currents the equipment could be exposed to or could emit, to below the levels it was originally required to meet. The barrier protection concept is described in good EMC design guide publications (including AEP 41 and Def Stan 59-411 Part 5). Where a COTS/MOTS equipment is modified through the use of a barrier, the resulting modified system needs to be verified against the EMC requirements.

These processes are described in outline only. In order to implement these processes effectively, it is necessary to ensure that the environment definition, evaluation, risk assessment and mitigation are performed by personnel with relevant EMC competencies.

Each of the following processes is expanded in subsequent flowcharts:

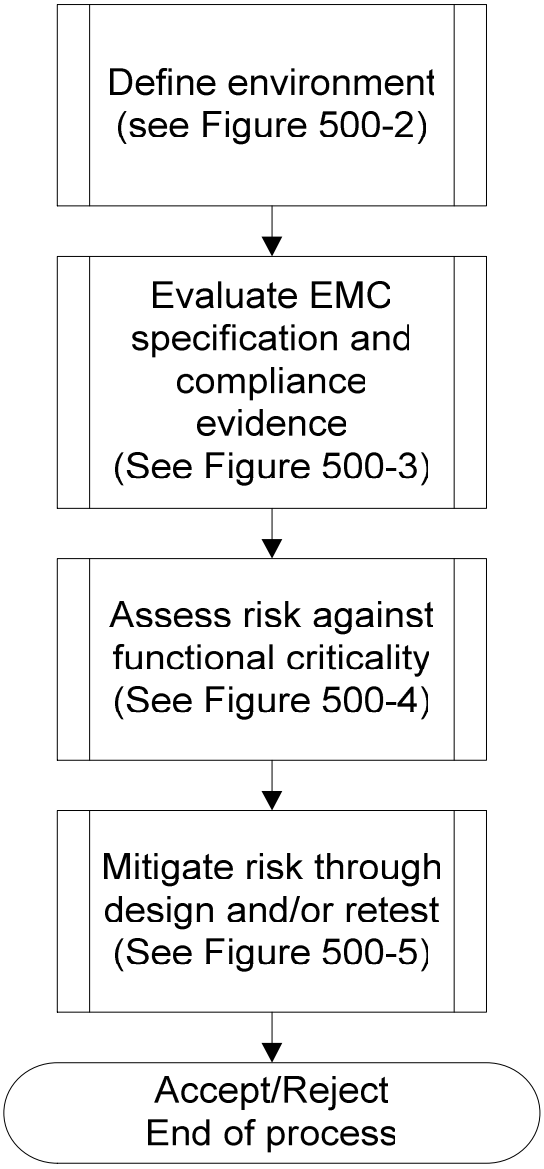

Figure 500-1 Risk Assessment of COTS / MOTS Procurement Main Flow Chart

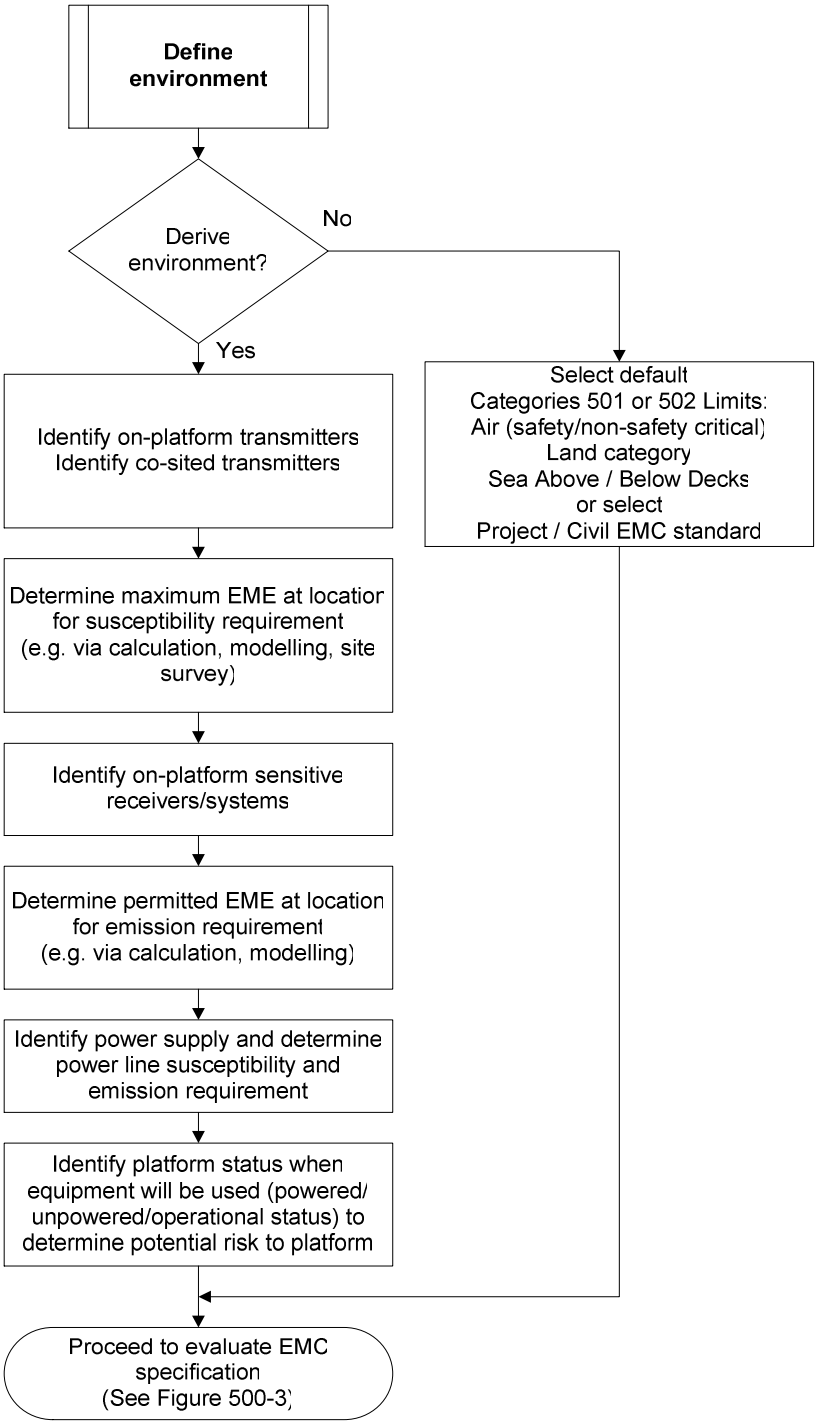

Figure 500-2 Define Environment Flow Chart

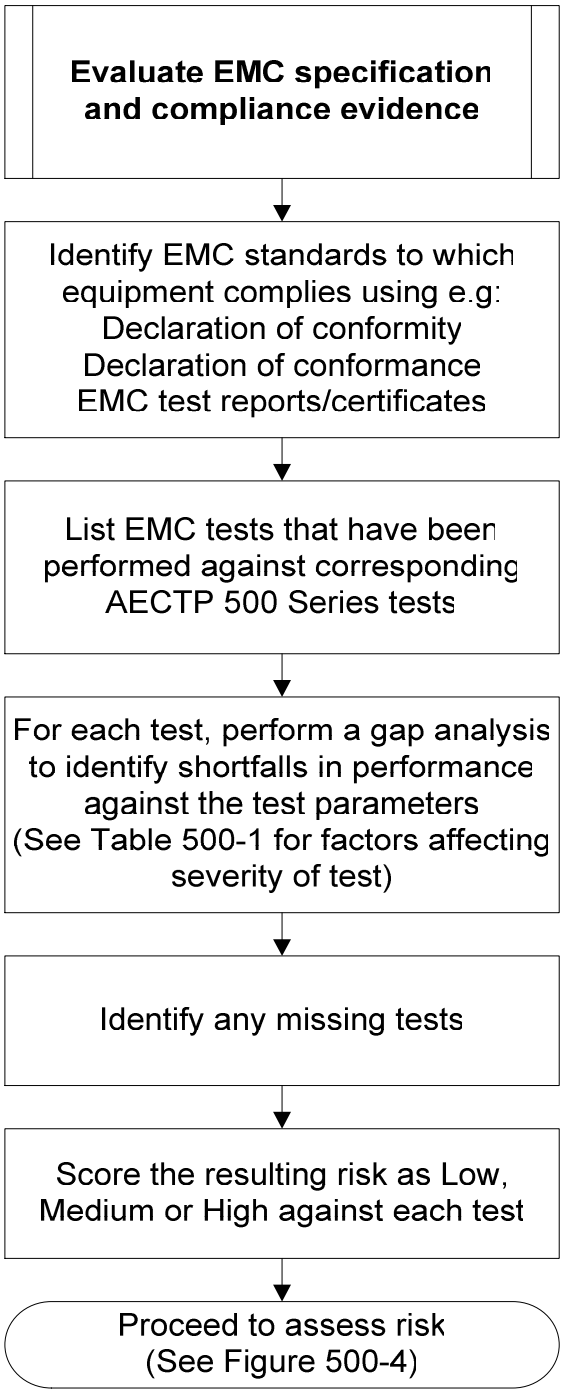

Figure 500-3 Evaluate EMC Specification Flow Chart

Test Type	EMC Gap Analysis Factor Affecting Test Severity (Not all may be applicable)
Conducted Emission	Scope of lines under test (power and/or signal, control) Frequency range Detector (average/peak/quasi peak) Measurement device (LISN/Current probe/AMN/ISN) Measurement distance from EUT along cable Limit units (current/voltage) Circuit impedance for converting between current and voltage Limit level
Radiated Emission	Frequency range Antenna test distance Extrapolation method Detector (average/peak/quasi peak) Test set-up (ground plane/EUT height/Bonding) Limit units (current/voltage) Limit level
Conducted Susceptibility	Scope of lines under test (power and/or signal, control) Frequency range Modulation Coupling device (Current probe/Coupling Decoupling Network/Shield Injection) Coupling distance from EUT along cable Limit units (current/voltage) Circuit impedance for converting between current and voltage Calibration technique (CW/peak envelope/monitor open circuit/monitor in circuit) Limit level
Radiated Susceptibility	Frequency range Modulation Test set-up (ground plane/EUT height/Bonding) Limit units (current/voltage) Calibration technique (CW/peak envelope/pre-calibrated volume/field monitored) Limit level

Test Type	EMC Gap Analysis Factor Affecting Test Severity (Not all may be applicable)
Transient Susceptibility	Scope of lines under test (power and/or signal, control) Peak (absolute) Voltage/Current (Impedance conditions) Peak (absolute) value of rate of rise Peak (absolute) Impulse – impulse equivalent maximum energy in a single polarity Rectangular Impulse – impulse equivalent of total energy Root action integral – total energy Time to peak value Frequency spectrum Calibration technique (pre-calibrated level/monitored in circuit) Differential or common mode coupling Repetition Rate

Table 500-2 EMC GAP Analysis Factors Affecting Test Severity

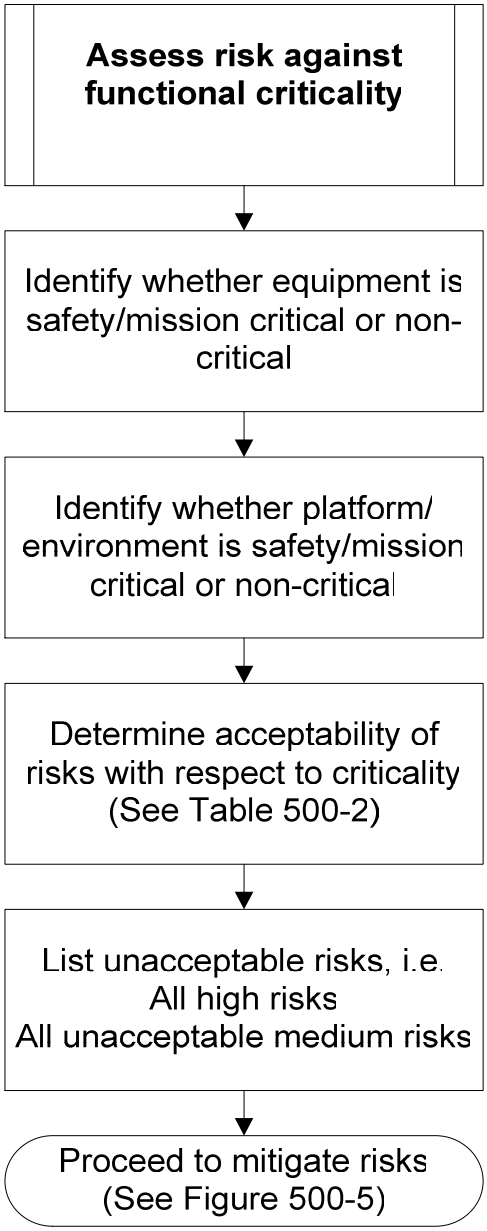

Figure 500-4 Assess Risk against Functional Criticality Flow Chart

Having determined the risk as Low, Medium or High from the previous evaluation process, the acceptability of these risks must be assessed. To assist in this process the **Table 500-3** provides a guide to the acceptable risk dependent on the criticality of the equipment under assessment and the criticality of its intended platform or environment. Having determined the criticalities, the corresponding intersection on **Table 500-2** provides the acceptable risk. The risk is shown separately for emission and susceptibility phenomena.

The risk assessment concept is that if the platform or environment is safety/mission critical, then the emissions from the equipment under assessment could act as a threat to the platform or environment and must therefore be controlled to a Nil to Low risk.

Secondly if the equipment under assessment is safety/mission critical, then its susceptibility must be controlled to a Nil to Low risk.

In the case of non-critical platform or environment, the emissions from the equipment under assessment can be accepted with a Low to Medium risk.

In the case of non-critical equipment under assessment, the susceptibility of the equipment under assessment can be accepted with a Low to Medium risk.

In all cases a High risk is unacceptable.

Having determined the acceptability of the risks, the unacceptable risks must be mitigated as shown in **Figure 500-5**. This will comprise a list of unacceptable Medium and/or High risks.

		Environment / Platform Criticality	
		Safety / Mission Critical	Non-Critical
Equipment Criticality	Safety Critical / Mission Critical	Emission = Low Susceptibility = Low	Emission = Low to Medium Susceptibility = Low
	Non-Critical	Emission = Low Susceptibility = Low to Medium	Emission = Low to Medium Susceptibility = Low to Medium
	NOTE: High Risk unacceptable for any combination without mitigation		

Table 500-3 Guide to Minimum Acceptable Risk Resulting from EMC Gap Analysis

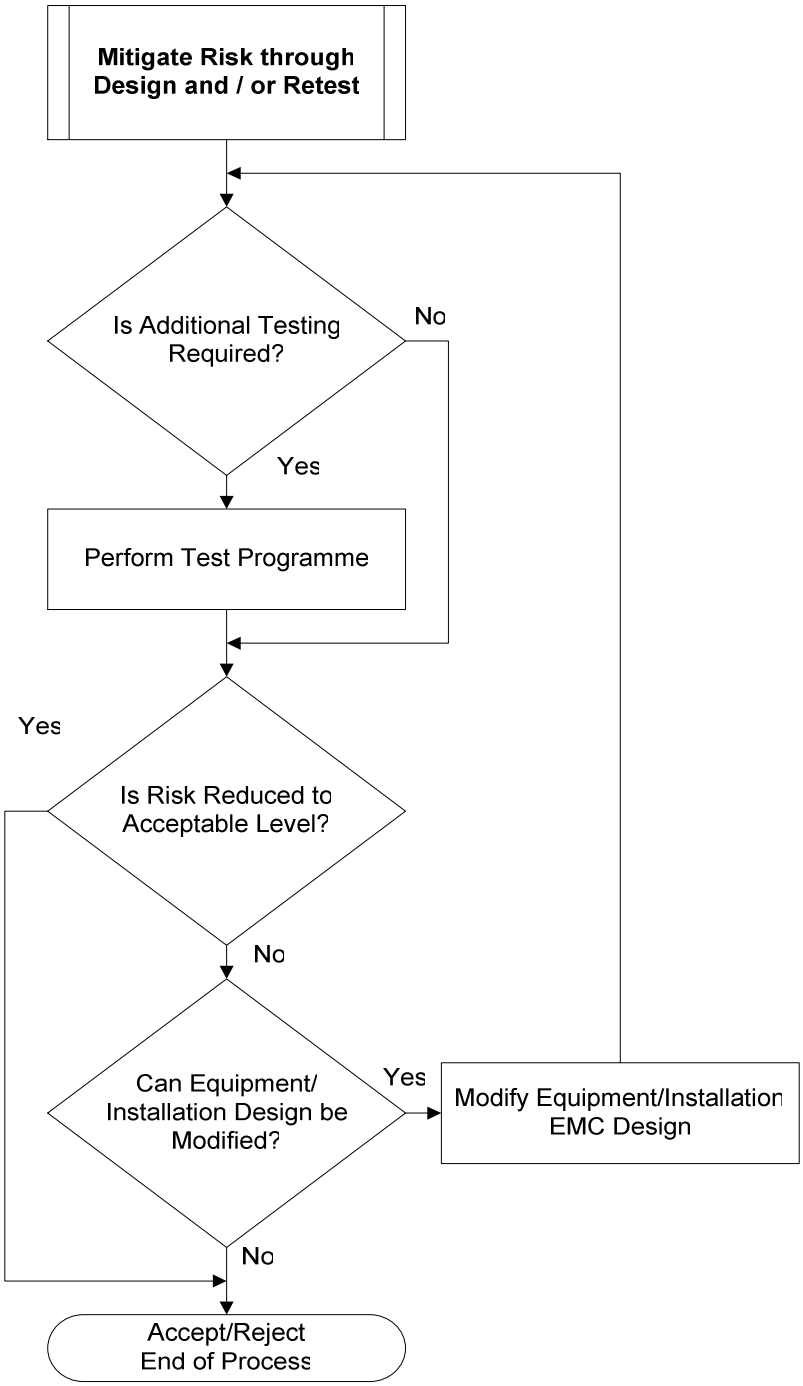

Figure 500-5 Mitigate Risk Through Design and / or Retest Flow Chart

CATEGORY 501

EQUIPMENT AND SUB-SYSTEM TESTS

1 SCOPE 501-11

1.1 Purpose 501-11

2 GUIDANCE 501-11

3 TESTING 501-11

4 GENERAL REQUIREMENTS 501-11

4.1 General 501-11
4.2 Interface Requirements 501-12
4.3 Verification Requirements 501-12

5 APPLICABILITY REQUIREMENTS 501-45

5.1 General 501-45
5.2 EMI Control Requirements versus Intended Installations 501-46

6 DETAILED TEST METHODS REQUIREMENTS 501-49

6.1 General 501-49
6.2 Units of Frequency Domain Measurements 501-49
6.3 Emission and Susceptibility Requirements, Limits, and Test Procedures 501-49
6.4 NCE01, Conducted Emissions, Power Leads, 30 Hz to 10 kHz 501-49
6.5 NCE02, Conducted Emissions, Power Leads, 10 kHz to 10 MHz 501-50
6.6 NCE03, Conducted Emissions, Antenna Terminal, 10 kHz to 40 GHz 501-52
6.7 NCE04, Conducted Emissions, Exported Transients on Power Leads 501-54
6.8 NCE05, Conducted Emission, Power, Signal and Control Leads, 30 Hz to 150 MHz 501-56
6.9 NCS01, Conducted Susceptibility, Power Leads, 30 Hz to 150 kHz 501-57
6.10 NCS02, Conducted Susceptibility, Control and Signal Leads, 30 Hz to 50 kHz 501-59
6.11 NCS03, Conducted Susceptibility, Antenna Port, Intermodulation, 15 kHz to 10 GHz 501-59
6.12 NCS04, Conducted Susceptibility, Antenna Port Rejection of Undesired Signals 30 Hz to 20 GHz 501-62
6.13 NCS05, Conducted Susceptibility, Antenna Port, Cross Modulation, 30 Hz to 20 GHz 501-64
6.14 NCS06, Conducted Susceptibility, Structure Current, 60 Hz to 100 kHz 501-65
6.15 NCS07, Conducted Susceptibility, Bulk Cable Injection, 10 kHz to 200 MHz 501-66
6.16 NCS08, Conducted Susceptibility, Bulk Cable Injection, Impulse Excitation 501-71
6.17 NCS09, Conducted Susceptibility, Damped Sinusoid Transients, Cables and Power Leads 10 kHz to 100 MHz 501-73

6.18 NCS10, Conducted Susceptibility, Imported Lightning Transient (Aircraft) 501-75
6.19 NCS11, Conducted Susceptibility, Low Frequency Power Leads (Sea Systems) 501-77
6.20 NCS12, Conducted Susceptibility Electrostatic Discharge 501-77
6.21 NCS13, Conducted Susceptibility, Transient Power Leads 501-78
6.22 NRE01, Radiated Emissions, Magnetic Field, 30 Hz to 100 kHz 501-79
6.23 NRE02, Radiated Emissions, Electric Field, 10 kHz to 18 GHz 501-80
6.24 NRE03, Radiated Emissions, Antenna Spurious and Harmonic Outputs, 10 kHz to 40 GHz 501-83
6.25 NRS01, Radiated Susceptibility, Magnetic Fields, 30 Hz to 100 kHz 501-84
6.26 NRS02, Radiated Susceptibility, Electric Field, 50 kHz to 40 GHz 501-86
6.27 NRS03, Radiated Susceptibility, Transient, Electromagnetic Field 501-91
6.28 NRS04, Radiated Susceptibility, Magnetic Field Susceptibility (DC) 501-92

7 APPLICABLE DOCUMENTS 501-92

7.1 Referenced 501-92
7.2 Information Only 501-94

8 ACRONYMS 501-94

9 DEFINITIONS 501-96

TEST PROCEDURES

10 NCE01 CONDUCTED EMISSIONS, POWER LEADS, 30 Hz to 10 kHz 501-98

10.1 NCE01 Applicability 501-98
10.2 NCE01 Limits 501-98
10.3 NCE01 Test Procedure 501-98

11 NCE02 CONDUCTED EMISSIONS, POWER LEADS, 10 kHz to 10 MHz 501-103

11.1 NCE02 Applicability 501-103
11.2 NCE02 Limits 501-103
11.3 NCE02 Test Procedure 501-103

12 NCE03 CONDUCTED EMISSIONS, ANTENNA TERMINAL, 10 KHz - 40 GHz 501-107

12.1 NCE03 Applicability 501-107
12.2 NCE03 Limits 501-107
12.3 NCE03 Test Procedure 501-107

13 NCE04, CONDUCTED EMISSIONS EXPORTED TRANSIENTS ON PRIMARY POWER LINES 501-114

13.1 NCE04 Applicability 501-114
13.2 NCE04 Limits 501-114
13.3 NCE04 Test Procedure 501-117

14 NCE05 CONDUCTED EMISSIONS, POWER, SIGNAL AND CONTROL LEADS, 30 Hz to 150 MHz 501-122

14.1 NCE05 Applicability 501-122
14.2 NCE05 Limits 501-122
14.3 NCE05 Test Procedure 501-122

15 NCS01 CONDUCTED SUSCEPTIBILITY, POWER LEADS, 30 Hz to 150 kHz 501-128

15.1 NCS01 Applicability 501-128
15.2 NCS01 Limit 501-128
15.3 NCS01 Test Procedure 501-128

16 NCS02 CONDUCTED SUSCEPTIBILITY, CONTROL AND SIGNAL LEADS, 20 Hz to 50 kHz 501-134

16.1 NCS02 Applicability 501-134
16.2 NCS02 Limits 501-134
16.3 NCS02 Test Procedure 501-134

17 NCS03 CONDUCTED SUSCEPTIBILITY, ANTENNA PORT, INTERMODULATION 15 kHz to 10 GHz 501-137

17.1 NCS03 Applicability 501-137
17.2 NCS03 Limit 501-137
17.3 NCS03 Test Procedures 501-137

18 NCS04 CONDUCTED SUSCEPTIBILITY, ANTENNA PORT, REJECTION of UNDESIRED SIGNALS, 30 Hz to 20 GHz 501-138

18.1 NCS04 Applicability 501-138
18.2 NCS04 Limit 501-138
18.3 NCS04 Test Procedures 501-138

19 NCS05 CONDUCTED SUSCEPTIBILITY, ANTENNA PORT, CROSS MODUULATION 30 Hz to 20 GHz 501-139

19.1 NCS05 Applicability 501-139
19.2 NCS05 Limit 501-139
19.3 NCS05 Test Procedures 501-139

20 NCS06 CONDUCTED SUSCEPTIBILIY STRUCTURE CURRENT, 60 Hz to 100 kHz 501-140

20.1 NCS06 Applicability 501-140
20.2 NCS06 Limit 501-140
20.3 NCS06 Test Procedures 501-140

21 NCS07 CONDUCTED SUSCEPTIBILITY, BULK CURRENT INJECTION, 10 kHz to 200 MHz 501-143

21.1 NCS07 Applicability 501-143
21.2 NCS07 Limit 501-143
21.3 NCS07 Test Procedures 501-143

22 NCS08 CONDUCTED SUSCEPTIBILITY, BULK CURRENT INJECTION IMPULSE EXCITATION 501-149

22.1 NCS08 Applicability 501-149
22.2 NCS08 Limit 501-149
22.3 NCS08 Test Procedure 501-149

23 NCS09 CONDUCTED SUSCEPTIBILITY, DAMPED SINUSOIDAL TRANSIENTS, CABLES and POWER LEADS, 10 kHz to 100MHz 501-154

23.1 NCS09 Applicability 501-154
23.2 NCS09 Limit 501-154
23.3 NCS09 Test Procedures 501-154

24 NCS10 CONDUCTED SUSCEPTIBILITY, IMPORTED LIGHTNING TRANSIENTS (AIRCRAFT / WEAPONS) 501-159

24.1 NCS10 Applicability 501-159
24.2 NCS10 Limits 501-159
24.3 NCS10 Test Procedure 501-160

25 NCS11 CONDUCTED SUSCEPTIBILITY, IMPORTED LOW FREQUENCY, SUSCEPTIBILTY POWER LEADS (SEA SYSTEMS) 501-168

25.1 NCS11 Applicability 501-168
25.2 NCS11 Limits 501-168
25.3 NCS11 Test Procedure 501-168

26 NCS 12 ELECTROSTATIC DISCHARGE 501-173

26.1 NCS12 Applicability 501-173
26.2 NCS12 Limit 501-173
26.3 NCS12 Test Procedure 501-174

27 NCS13 CONDUCTED SUSCEPTIBILITY, TRANSIENTS, POWER LEADS 501-180

27.1 NCS13 Applicability 501-180
27.2 NCS13 Limit 501-180
27.3 NCS13 Test Procedure 501-180

28 NRE01 RADIATED EMISSIONS, MAGNETIC FIELD, 30 Hz to 100 kHz 501-185

28.1 NRE01 Applicability 501-185
28.2 NRE01 Limit 501-185
28.3 NRE01 Test Procedures 501-185

29 NRE02 RADIATED EMISSIONS, ELECTRIC FIELD, 10 kHz to 18 GHz 501-190

29.1 NRE02 Applicability 501-190
29.2 NRE02 Limits 501-190
29.3 NRE02 Test Procedures 501-190

30 NRE03 RADIATED EMISSIONS, ANTENNA SPURIOUS and HARMONIC OUTPUTS 10 kHz to 40 GHz 501-200

30.1 NRE03 Applicability 501-200
30.2 NRE03 Limits 501-200

30.3 NRE03 Test Procedures 501-200

31 NRS01 RADIATED SUSCEPTIBILITY, MAGNETIC FIELD, 30 Hz to 100 kHz 501-205

31.1 NRS01 Applicability 501-205
31.2 NRS01 Limit 501-205
31.3 NRS01 Test Procedures 501-205
31.4 NRS01 alternative test procedures – AC Helmholtz coil 501-207

32 NRS02 RADIATED SUSCEPTIBILITY, ELECTRIC FIELD, 50 kHz to 40 GHz 501-213

32.1 NRS02 Applicability 501-213
32.2 NRS02 Limit 501-213
32.3 NRS02 Test Procedures 501-213
32.4 NRS02 Alternative Test Procedures – Reverberation Chamber (Mode-Tuned) 501-216

33 NRS03 RADIATED SUSCEPTIBILITY, TRANSIENT ELECTROMAGNETIC FIELD 501-227

33.1 NRS03 Applicability 501-227
33.2 NRS03 Limit 501-227
33.3 NRS03 Test Procedures 501-227

34 NRS04 RADIATED SUSCEPTIBILITY, MAGNETIC FIELD (DC) 501-233

34.1 NRS04 Applicability 501-233
34.2 NRS04 Limits 501-233
34.3 NRS04 Test Procedure 501-233

FIGURES

Figure 501-1 Voltage Probe for Tests at User's Installation 501-13

Figure 501-2 RF Absorber Loading Diagram 501-16

Figure 501-3 Test Set-Up for Conductive Surface Mounted EUT 501-19

Figure 501-4 Test Set-Up for Non-Conductive Surface Mounted EUT 501-19

Figure 501-5 Test Set-Up for Free Standing EUT in Shielded Enclosure 501-20

Figure 501-6 Test Set-Up for Free Standing EUT 501-20

Figure 501-7 Typical 50 µH LISN schematic 501-22

Figure 501-8 Typical 5 µH LISN schematic 501-22

Figure 501-9 50 µH LISN Impedance 501-23

Figure 501-10 5 µH LISN Impedance 501-23

Figure 501-11 Peak Detector Response 501-34

Figure 501-12 Example of Data Presentation Resolution 501-40

Figure 501-13 Correction Factor for 50 µH LISN Coupling Capacitor 501-52

Figure 501-14 Basic Circuit for NCE04 Probe/Filter/Oscilloscope Combination 501-56

Figure 501-15 NCS01 Power Amplifier Protection 501-58

Figure 501-16 NCS03 General Test Set-Up 501-61

Figure 501-17 NCS04 General Test Set-Up 501-63

Figure 501-18 NCS05 General Test Set-Up 501-65

Figure 501-19 Typical NCS07 Calibration Fixture 501-68

Figure 501-20 Maximum VSWR of Calibration Fixture 501-69

Figure 501-21 Insertion Loss Measurement 501-70

Figure 501-22 NCS07 Alternative Test Setup, Three Phase Ungrounded Power System 501-71

Figure 501-23 Circuit Diagram of NCS08 Pulse Generator 501-72

Figure 501-24 Typical NCS08 Calibration Fixture Waveform 501-73

Figure NCE01-1 Limit for Submarine Applications 501-100

Figure NCE01-3 Limit for Surface Ships and Submarine Applications, 400Hz 501-101

Figure NCE01-4 Limit for Air Applications 501-101

Figure NCE01-5 Measurement System Check 501-102

Figure NCE01-6 Measurement Setup 501-102

Figure NCE02-1 Limit (EUT power leads, AC and DC) for all Applications 501-105

Figure NCE02-2 Measurement System Check Setup 501-105

Figure NCE02-3 Measurement Setup 501-106

Figure NCE03-1 Setup for Low Power Transmitters and Amplifiers 501-111

Figure NCE03-2 Setup for High Power Transmitters and Amplifiers 501-112

Figure NCE03-3 Setup for Receivers and Stand-by mode for Transmitters and Amplifiers 501-113

Figure NCE04-1 Typical Test Configuration, DC Supply 501-120

Figure NCE04-2 Typical Test Configuration, AC Supply Lines 501-121

Figure NCE05-1 NCE05 Limits for Air Service Use 501-124

Figure NCE05-2 NCE05 Limits for Land Service Use 501-125

Figure NCE05-3 NCE05 Limits for Sea Service Use (DC, 60Hz, 400Hz) 501-125

Figure NCE05-4 Measurement System Check 501-126

Figure NCE05-5 Measurement Setup for Power Leads 501-126

Figure NCE05-6 Measurement Setup for Signal and Control Leads 501-127

Figure NCS01-1 Voltage Limit for all Applications 501-130

Figure NCS01-2 Power Limit for all Applications 501-131

Figure NCS01-3 Calibration 501-131

Figure NCS01-4 Signal Injection, DC or Single Phase AC 501-132

Figure NCS01-5 Signal Injection, 3-Phase Ungrounded 501-132

Figure NCS01-6 Signal Injection, 3-Phase Wye 501-133

Figure NCS02-1 Limit for Air Application 501-135

Figure NCS02-2 Limit for Land and Sea Application 501-136

Figure NCS02-3 Basic Test Setup 501-136

Figure NCS06-1 Limit for all Applications 501-142

Figure NCS06-2 Test Configuration 501-142

Figure NCS07-1 Calibration Limit for all Applications 501-147

Figure NCS07-2 Maximum Insertion Loss for Injection Probes 501-147

Figure NCS07-3 Calibration Setup 501-148

Figure NCS07-4 Bulk Cable Injection Evaluation 501-148

Figure NCS08-1 NCS08 Signal Characteristics for all Applications 501-151

Figure NCS08-2 Typical NCS08 Calibration Fixture Waveform with a Longer Recording Time 501-152

Figure NCS08-3 Calibration Set-Up 501-152

Figure NCS08-4 Bulk Current Injection 501-153

Figure NCS09-1 Typical NCS09 Damped Sinusoidal Waveform 501-156

Figure NCS09-2 Limit for all Applications 501-157

Figure NCS09-3 Typical Test Setup for Calibration of Test Waveform 501-157

Figure NCS09-4 Typical Setup for Bulk Cable Injection of Damped Sinusoidal Transients 501-158

Figure NCS10-1 Short Waveform..... 501-165

Figure NCS10-2 Intermediate Waveform..... 501-166

Figure NCS10-4 Typical Test Configuration 501-167

Figure NCS10-5 Typical Generator Performance Verification Setup 501-167

Figure NCS11-1 Typical Transient Waveform (600V and 750V)..... 501-171

Figure NCS11-2 Typical Transient Waveform (2500V) 501-171

Figure NCS11-3 Typical Test Configuration 501-172

Figure NCS12-1 Simplified Circuit Diagram of the ESD Generator 501-177

Figure NCS12-2 ESD Generator Discharge Tip Geometry 501-177

Figure NCS12-3 Typical Type 4 ESD Waveform 501-178

Figure NCS12-4 Generator Calibration Setup 501-178

Figure NCS12-5 ESD Calibration Arrangement 501-179

Figure NCS12-6 Typical Test Configuration 501-179

Figure NCS13-1 Voltage Limit 501-182

Figure NCS13-2 Calibration..... 501-183

Figure NCS13-3 Signal Injection, DC or Single Phase AC..... 501-183

Figure NCS13-4 Signal Injection, 3-Phase Ungrounded..... 501-184

Figure NCS13-5 Signal Injection, 3-Phase Wye..... 501-184

Figure NRE01-1 Limit for Air Applications..... 501-187

Figure NRE01-2 Limit for Land Applications 501-187

Figure NRE01-3 Limit for all Sea Applications 501-188

Figure NRE01-4 Calibration Configuration 501-188

Figure NRE01-5 Basic Test Setup 501-189

Figure NRE02-1 Limits for Air and Space System Application 501-193

Figure NRE02-2 Limits for Land Application 501-194

Figure NRE02-3 Limits for Surface Sea Application 501-195

Figure NRE02-4 Limits for Submarine Application 501-196

Figure NRE02-5 Basic Test Setup 501-197

Figure NRE02-6 Antenna Positioning 501-198

Figure NRE02-7 Multiple Antenna Positions 501-199

Figure NRE02-8 Rod Antenna System Check 501-199

Figure NRE03-1 Calibration and Test Setup for Radiated Harmonics and Spurious Emissions, 10 kHz to 1 GHz 501-203

Figure NRE03-2 Calibration and Test Setup for Radiated Harmonics and Spurious Emissions, 1 GHz to 40 GHz 501-204

Figure NRS01-1 Limit for all Air and Sea Applications 501-209

Figure NRS01-2 Limit for all Land Applications 501-209

Figure NRS01-3 Calibration of the Radiating System 501-210

Figure NRS01-4 Basic Test Setup 501-210

Figure NRS01-5 Calibration of Helmholtz Coils 501-211

Figure NRS01-6 Test Setup for Helmholtz Coils 501-212

Figure NRS02-1 Test Equipment Configuration 501-221

Figure NRS02-2 Multiple Test Antenna Locations for Frequency > 200 MHz 501-222

Figure NRS02-3 Multiple Test Antenna Locations for N Positions, D > 3 metres 501-223

Figure NRS02-4 Receive Antenna Procedure (1 to 40 GHz) 501-224

Figure NRS02-5 Reverberation Chamber Setup 501-225

Figure NRS02-6 Reverberation Chamber Overview 501-226

Figure NRS03-1 Limit for all Applications 501-230

Figure NRS03-2 Typical Calibration Setup using Parallel Plate Radiation System 501-231

Figure NRS03-3 Typical Test Setup using Parallel Plate Radiation System 501-232

Figure NRS04-1 Equipment Calibration Setup 501-235

Figure NRS04-2 Arrangement of EUT within Helmholtz Coil Assembly 501-236

Figure NRS04-3 Localised Test Method 501-236

TABLES

Table 501-1 Absorption at Normal Incidence 501-15

Table 501-2 Bandwidth and Measurement Time 501-36

Table 501-3 Derived Multiple Scan Times 501-37

Table 501-4 Susceptibility Scanning 501-41

Table 501-5 Susceptibility Testing Times 501-42

Table 501-6 Emission and Susceptibility Requirements 501-47

Table 501-7 Requirement Matrix 501-48

Table NCE03-1 EUT Operating Frequency Range 501-107

Table NCS01-1 3 Phase Ungrounded Power 501-129

Table NCS01-2 3 Phase Wye Power 501-130

Table NCS07-1 Limit Curves 501-146

Table NCS10-1 Peak Waveform Amplitude Limits 501-160

Table NCS10-2 Pulse Waveform and Output Characteristics 501-161

Table NCS11-1 Level of Applied Transients 501-168

Table NCS11-2 Generator Performance Characteristics 501-169

Table NCS12-1 Application of Charging Voltages by Equipment Category 501-174

Table NCS12-2 ESD Generator Output Requirements 501-175

Table NCS12-3 Outline Technical Characteristics of ESD Generator 501-175

Table NRE03-1 Operating Frequency Range of EUT 501-200

Table NRSO2-1 Limits 501-220

Table NRS02-2 Required Number of Tuner Positions for a Reverberation Chamber 501-221

CATEGORY 501

Equipment and Sub-System Tests

1 SCOPE

1.1 Purpose

The aim of this category is to cover the requirements for development of a test program for all materiel characterised as electronic, electrical and electromechanical equipment, to be tested at the equipment and subsystems level.

For Application and Limitations see AECTP 500 – **Clauses 2.2** and **2.3**.

2 GUIDANCE

See AECTP 500 – **Clause 3**.

3 TESTING

See AECTP 500 – **Clause 4**.

4 GENERAL REQUIREMENTS

4.1 General

Electronic, electrical, and electromechanical equipment and subsystems shall comply with the applicable general interface requirements detailed in **Clause 4.2**. General requirements for verification shall be in accordance with **Clause 4.3**. These general requirements are in addition to the applicable detailed emission and susceptibility requirements and associated test procedures defined in **Clause 4.0**.

Discussion: *The requirements in this clause are universally applicable to all subsystems and equipment. Separate emission and susceptibility requirements that are structured to address specific concerns with various classes of subsystems and equipment are contained in other clauses of this category of the standard.*

This document is concerned only with specifying technical requirements for controlling electromagnetic interference (EMI) emissions and susceptibility at the subsystem-level and equipment-level. The requirements in this document are not intended to be directly applied to subassemblies of equipment such as modules or circuit cards. The basic concepts can be implemented at the subassembly level; however, significant tailoring needs to be accomplished for the particular application. The requirements included herein are intended to be used as a baseline. Placement of the limits is based on demonstrated performance typically required for use on existing platforms in order to achieve electromagnetic compatibility (EMC). System-level requirements dealing with integration of subsystems and equipment are contained in AECTP 505 for Air [Ref 1], 506 for Sea [Ref 2], 507 for Land [Ref 3] and 508 for Ordnance [Ref 4]. The procuring activity and system contractors should review the requirements contained herein for possible tailoring based on system design and expected operational environments. MIL-STD-469 [Ref 5] provides additional requirements for radars for achieving electromagnetic compatibility. In addition national laws governing use of the radio frequency spectrum must be addressed.

Guidance and techniques, which are helpful in meeting the requirements of this AECTP 501 category are contained in the AECTP 250 series of leaflets [Ref 6] other useful publications are listed under ***Clause 7.2*** *for information.*

The qualification status of equipment and subsystems becomes uncertain when hardware or software changes are incorporated due to equipment updates or test failures, including failures from testing to requirements other than EMI. To maintain AECTP 501 qualification after changes are implemented, either an analysis showing no substantive impact needs to be issued or continued compliance needs to be demonstrated by limited testing deemed to be appropriate to evaluate the changes. The approach used to maintain continued certification and the results of analysis and testing are normally subject to procuring activity approval.

4.2 Interface Requirements

See AECTP 500 – **Clause 3.5**.

4.3 Verification Requirements

The general requirements related to test procedures, test facilities, and equipment stated below, together with the detailed test procedures included in **Clause 6.0**, shall be used to determine compliance with the applicable emission and susceptibility requirements of this standard. Any procuring activity approved exceptions or deviations from these general requirements shall be documented in the Electromagnetic Interference Test Procedures (EMITP). Equipment that is intended to be operated as a subsystem shall be tested as such to the applicable emission and susceptibility requirements whenever practical. Formal testing is not to commence without approval of the EMITP by the Command or agency concerned. Data that is gathered as a result of performing tests in one electromagnetic discipline might be sufficient to satisfy requirements in another. Therefore, to avoid unnecessary duplication, a single test program should be established with tests for similar requirements conducted concurrently whenever possible.

Discussion*:This portion of the document specifies general requirements that are applicable to a variety of test procedures applicable for individual emissions and susceptibility requirements. The detailed test procedures for each emissions and susceptibility requirement include procedures that are unique to that requirement. Other sources of information dealing with electromagnetic interference testing are available in industry documents such as RTCA DO-160 [Ref 7], SAE ARP 1972 [Ref 8] and CISPR 16-1 [Ref 9].*

Electromagnetic disciplines (EMC), electromagnetic pulse (EMP), lightning, RF compatibility, frequency allocation, etc. are integrated to differing levels in various government and contractor organisations. There is often a common base of requirements among the disciplines. It is more efficient to have unified requirements and complete and concise testing. For example, the EMC, EMP and lightning areas all pertain to electronic hardness to transients. The transient requirements in this standard should satisfy most concerns or should be adapted as necessary to do so.

Testing integrated equipment at the subsystem-level is advantageous because the actual electrical interfaces are in place rather than electrical load or test equipment simulations. When simulations are used, there is always doubt regarding the integrity of the simulation and questions arise whether emission and susceptibility problems are due to the equipment under test or the simulation.

"Contractor-generated" test procedures provide a mechanism to interpret and adapt AECTP 501, as it is applicable to a particular subsystem or equipment and to detail the test agency's facilities and instrumentation and their use. It is important that the procedures are available to the procuring activity early so that the procuring activity can approve the test procedures prior to the start of testing. Agreement needs to exist between the procuring activity and the contractor on the interpretation of test requirements and procedures, thereby minimising the possible need for re-testing.

When testing large equipment, equipment that requires special handling provision or high power equipment, deviations from the standard testing procedures may be required. Large equipment may not fit through the typical shielded room door or may be so heavy that it would crush the floor. Other

equipment has large movable arms or turrets or equipment that requires special heating or cooling facilities. This equipment may have to be tested at the manufacturer's facilities or at the final installation. The following examples are for guidance. Sound engineering practices should be used and explained in detail in the EMITP when deviating from the standard test procedures due to EUT characteristics. The design of the tests is of primary importance and the data recorded during the testing must reflect the final installation characteristics as closely as possible.

For equipment which requires high input current (for example: > 200 A), commercial LISNs may not be available. For NCE02, the "voltage probe" called out in ANSI C63.4 [Ref 10] may be substituted. The construction of the probe is shown in ***Figure 501-1****. A direct connection to the power lines is required and care must be taken to establish a reference ground for the measurements. It may be necessary to perform repeated measurements over a suitable period of time to determine the variation in the power line impedance and the impact on the measured emissions from the EUT.*

The measurements are made between each current-carrying conductor in the supply mains and the ground conductor with a blocking capacitor C and resistor R, as shown in ***Figure 501-1****, so that the total resistance between the line under test and ground is 1500 Ω. The probe attenuates the voltage so calibration factors are required. The measurement point (probe's position on the cables) must be identified in all test set-ups.*

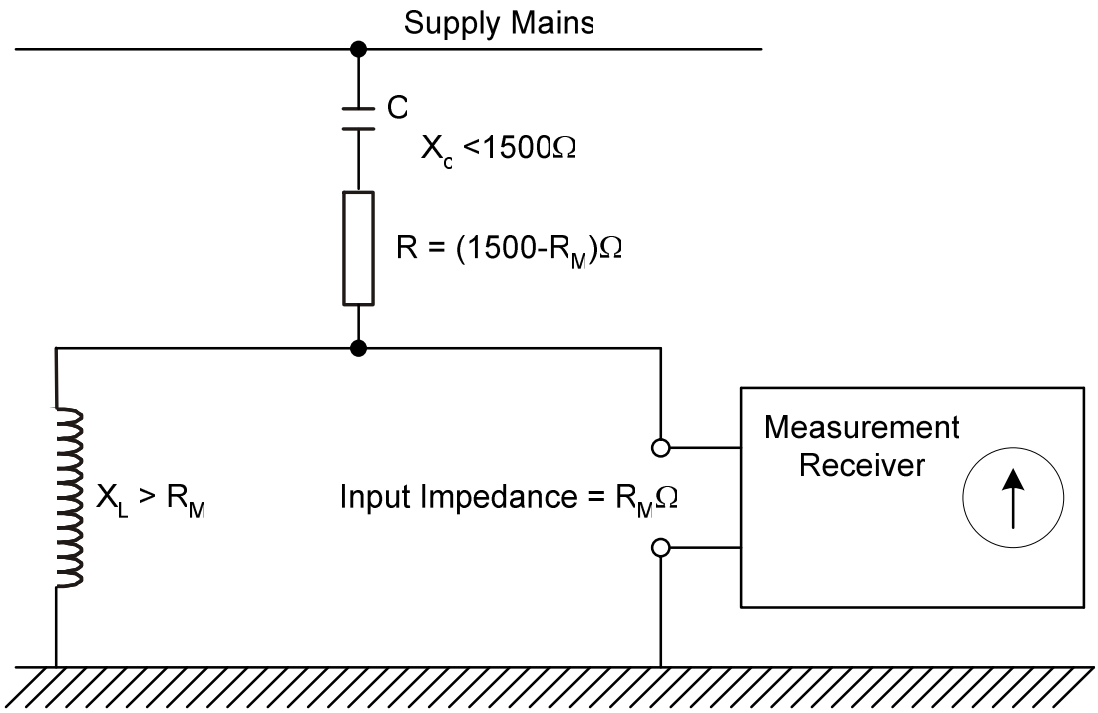

Figure 501-1 Voltage Probe for Tests at User's Installation

When equipment is too large or requires special provisions (loads, drives, water, emission of toxic fumes and such), testing in a typical anechoic room may not be feasible. Temporary screen rooms consisting of RF absorbent cloth can be built around the test area to reduce the ambient for radiated emission testing and to contain the RF field during radiated susceptibility testing. Since the room may be highly reflective, care must be taken to identify any resonances. Several antenna positions may be required in order to reduce the effect of the resonances.

Equipment, which produces high power RF output, may be required to be tested on an open area test site. Additionally, equipment that needs to have a communication link to the outside world must be tested in the open. Government approval may be required in order to generate the RF fields for the NRS02 test requirement. If the communication link can be simulated, then the test can be performed in

a shielded room. In this case, special dummy loads may be required, since the high power RF radiation could damage the anechoic material due to heating.

Imposition of EMI requirements on large equipment has become essential to prevent EMI problems. Therefore, EMI requirements should not be waived simply because of special handling problems or equipment size. Typical equipment and subsystems for which these special provisions have been applied are as follows:

a. *Air handling units (heating, ventilating, and air conditioning)*

b. *Large uninterruptible power supplies (UPS)*

c. *Equipment vans/motorised vehicles*

d. *Desalinisation units*

e. *Large motors/generators/drives/power distribution systems*

f. *Large radars*

g. *Rail guns and their power sources*

h. *Catapults and their power sources*

i. *Multiple console subsystems*

Reference should also be made to Refs [1], [2], [3] and [4].

4.3.1 Measurement Tolerances

Unless otherwise stated for a particular measurement, the tolerance shall be as follows:

a. Distance: ±5%

b. Frequency: ±2%

c. Amplitude, measurement receiver: ±2 dB

d. Amplitude, measurement system (includes measurement receivers, transducers, cables, and so forth): ±3 dB

e. Time (waveforms): ±5%

f. Resistors: ±5%

g. Capacitors: ±20%

Discussion: *Tolerances are necessary to maintain controls for obtaining consistent measurements.* ***Clause 4.3.1 b*** *through to* ***4.3.1.d*** *is in agreement with Ref [10] for electromagnetic noise instrumentation. See also AECTP 500* ***Clause 4.2.3*** *for further information.*

4.3.2 Shielded Enclosures

To prevent interaction between the EUT and the outside environment, shielded enclosures will usually be required for testing. These enclosures prevent external environment signals from contaminating emission measurements and susceptibility test signals from interfering with electrical and electronic items in the vicinity of the test facility. Shielded enclosures must have adequate attenuation such that the ambient requirements of **Clause 4.3.4** are satisfied. The enclosures must be sufficiently large such that the EUT arrangement requirements of **Clause 4.3.8** and antenna positioning requirements described in the individual test procedures are satisfied.

Discussion: *Potential accuracy problems introduced by shielded enclosure resonances are well documented and recognised; however, shielded enclosures are usually a necessity for testing of military equipment to the requirements of this standard. Most test agencies are at locations where ambient levels outside of the enclosures are significantly above the limits in this standard and would interfere with the ability to obtain meaningful data.*

Electrical interfaces with military equipment are often complex and require sophisticated test equipment to simulate and evaluate the interface. This equipment usually must be located outside of the shielded enclosure to achieve sufficient isolation and prevent it from contaminating the ambient and responding to susceptibility signals.

The shielded enclosure also prevents radiation of applied susceptibility signals from interfering with local antenna-connected receivers. The most obvious potential offender is the NRS02 test. However, other susceptibility tests can result in substantial radiated energy that may violate Government rules.

4.3.2.1 Radio Frequency (RF) Absorber Material

RF absorber material (carbon impregnated foam pyramids, ferrite tiles, and so forth) shall be used when performing electric field radiated emissions or radiated susceptibility testing inside a shielded enclosure (except for mode stir testing) to reduce reflections of electromagnetic energy and to improve accuracy and repeatability. The RF absorber shall be placed above, behind, and on both sides of the EUT, and behind the radiating or receiving antenna as shown in **Figure 501-2**. Minimum performance of the material shall be as specified in **Table 501-1**. The manufacturer's certification of their RF absorber material (basic material only, not installed) is acceptable.

Discussion: *Accuracy problems with making measurements in untreated shielded enclosures due to reflections of electromagnetic energy have been widely recognised and documented. The values of RF absorption required by **Table 501-1** are considered to be sufficient to substantially improve the integrity of the measurements without unduly impacting test facilities. The minimum placement provisions for the material are specified to handle the predominant reflections. The use of additional material is desirable, where possible. It is intended that the values in **Table 501-1** can be met with available ferrite tile material or standard 0.6 metres (24 inch) pyramidal absorber material.*

Frequency	Minimum Absorption
80 MHz – 250 MHz	6 dB
Above 250 MHz	10 dB

Table 501-1 Absorption at Normal Incidence

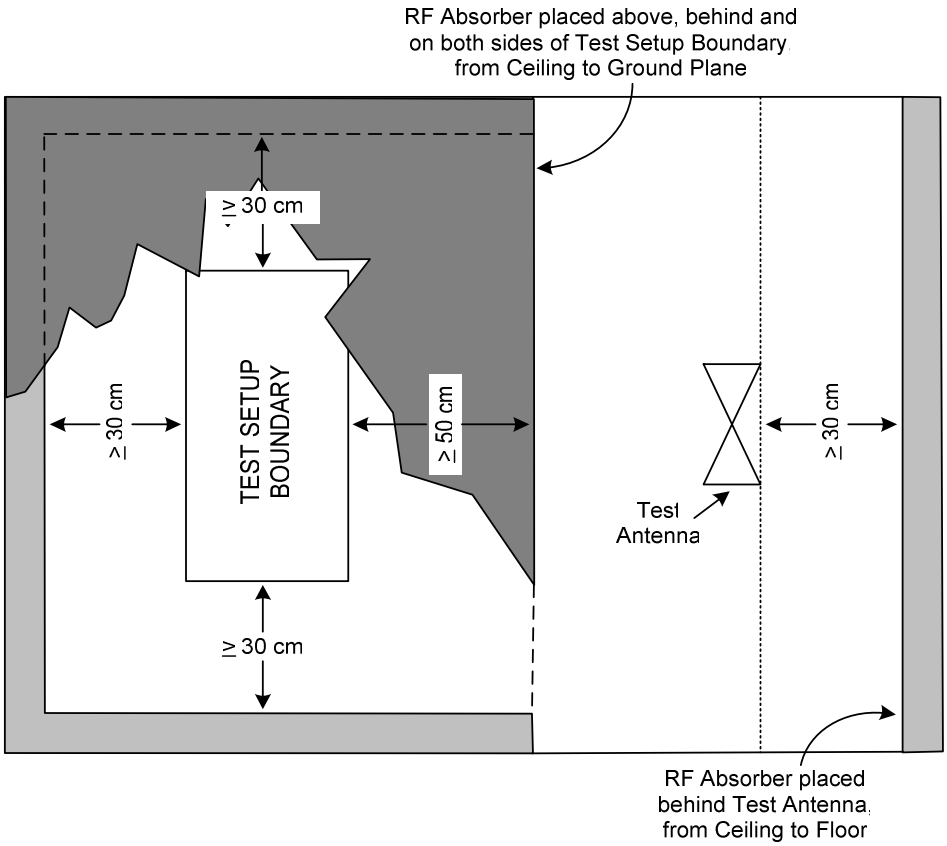

Figure 501-2 RF Absorber Loading Diagram

4.3.3 Other Test Sites

If other test sites are used, the ambient requirements of **Clause 4.3.4** shall be met.

Discussion: *For certain types of EUTs, testing in a shielded enclosure may not be practical. Examples are EUTs which are extremely large, require high electrical power levels or motor drives to function, emit toxic fumes, or are too heavy for normal floor loading (see the discussion section of* ***Clause 4.3*** *for additional information). There is a serious concern with ambient levels contaminating data when testing is performed outside of a shielded enclosure. Therefore, special attention is given to this testing under* ***Clause 4.3.4****, "Ambient electromagnetic level." All cases where testing is performed outside a shielded enclosure shall be justified in detail in the EMITP, including typical profiles of expected ambient levels.*

If it is necessary to operate EUTs that include RF transmitters outside of a shielded enclosure, spectrum certification and a frequency assignment must first be obtained through the spectrum management process.

An option in emission testing is the use of an open area test site (OATS) in accordance with Ref [10]. These sites are specifically designed to enhance accuracy and repeatability. Due to differences between Ref [10] and this category of the AECTP 500 standard in areas such as antenna selection, measurement distances, and specified frequency ranges, the EMITP shall detail the techniques for using the OATS and relating the test results to the requirements of this standard.

4.3.4 Ambient Electromagnetic Level

During testing, the ambient electromagnetic level measured with the EUT de-energised and all auxiliary equipment turned on shall be at least 6 dB below the allowable specified limits when the tests are performed in a shielded enclosure. Ambient conducted levels on power leads shall be measured

with the leads disconnected from the EUT and connected to a resistive load, which draws the same rated current as the EUT. When tests are performed in a shielded enclosure and the EUT is in at least 6dB below required limits, the ambient profile need not be recorded in the Electromagnetic Interference Test Report (EMITR). When measurements are made outside a shielded enclosure, the tests shall be performed during times and conditions when the ambient is at its lowest level. The ambient shall be recorded in the EMITR and shall not compromise the test results.

Discussion: *Controlling ambient levels are critical to maintaining the integrity of the gathered data. High ambients present difficulties distinguishing between EUT emissions and ambient levels. Even when specific signals are known to be ambient related; they may mask EUT emissions that are above the limits in this category of the AECTP 500 standard.*

The requirement that the ambient be at least 6 dB below the limit ensures that the combination of the EUT emissions and ambient does not unduly affect the indicated magnitude of the emission. If a sinusoidal noise signal is at the limit and the ambient is 6 dB below the limit, the indicated level should be approximately 3 dB above the limit. Similarly, if the ambient were allowed to be equal to the limit for the same true emission level, the indicated level would be approximately 5 dB above the limit.

A resistive load is specified to be used for conducted ambient measurements on power leads. However, under certain conditions actual ambient levels may be higher than indicated with a resistive load. The most likely reason is the presence of capacitance at the power interface of the EUT that will lower the input impedance at higher frequencies and increase the current. This capacitance should be determined and ambient measurements repeated with the capacitance in place. There is also the possibility of resonance conditions with shielded room filtering, EUT filtering, and power line inductance. These types of conditions may need to be investigated if unexpected emission levels are observed.

Testing outside of a shielded enclosure often must be performed at night to minimise influences of the ambient. A prevalent problem with the ambient is that it continuously changes with time as various emitters are turned on and off and as amplitudes fluctuate. A useful tool for improving the flow of testing is to thoroughly analyse the EUT circuitry prior to testing and identify frequencies where emissions may be expected to be present.

An option to improve overall measurement accuracy is to make preliminary measurements inside a shielded enclosure and accurately determine frequencies where emissions are present. Testing can be continued outside the shielded enclosure with measurements being repeated at the selected frequencies. The 6 dB margin between the ambient and limits must then be observed only at the selected frequencies.

4.3.5 Ground Plane

The EUT shall be installed on a ground plane that simulates the actual installation. If the actual installation is unknown or multiple installations are expected, then a metallic ground plane shall be used. See **Figure 501-3**. Unless otherwise specified below, ground planes shall be 2.25 square metres or larger in area with the smaller side no less than 76 cm. When a ground plane is not present in the EUT installation, the EUT shall be placed on a non-conductive table see **Figure 501-4**.

Discussion: *Generally, the radiated emissions and radiated susceptibilities of equipment are due to coupling from and to the interconnecting cables and not via the case of the EUT. Emissions and susceptibility levels are directly related to the placement of the cable with respect to the ground plane and to the electrical conductivity of the ground plane. Thus, the ground plane plays an important role in obtaining the most realistic test results.*

When the EUT is too large to be installed on a conventional ground plane on a bench, the actual installation should be duplicated. For example, a large radar antenna may need to be installed on a test stand and the test stand bonded to the floor of the shielded enclosure. Ground planes need to be placed on the floor of shielded rooms with floor surfaces such as tiles that are not electrically conductive see ***Figure 501-5****.*

The use of ground planes is also applicable for testing outside of a shielded enclosure see ***Figure 501-6****. These ground planes will need to be referenced to earth as necessary to meet the electrical safety requirements of National Electrical Codes. Where possible, these ground planes should be electrically bonded to other accessible grounded reference surfaces such as the outside structure of a shielded enclosure.*

The minimum dimensions for a ground plane of 2.25 square metres with 76 cm on the smallest side will be adequate only for set-ups involving a limited number of EUT enclosures with few electrical interfaces. The ground plane must be large enough to allow for the requirements included in ***Clause 4.3.8*** *on positioning and arrangement of the EUT and associated cables to be met.*

4.3.5.1 Metallic Ground Plane

When the EUT is installed on a metallic ground plane, the ground plane shall have a surface resistivity no greater than 0.1 mΩ per square. The DC resistance between metallic ground planes and the shielded enclosure shall be 2.5 mΩ or less. The metallic ground planes shown in **Figures 501-3** through to **501-6** shall be electrically bonded to the floor or wall of the basic shielded room structure at least once every 1 metre. The metallic bond straps shall be solid and maintain a five-to-one ratio or less in length to width. Metallic ground planes used outside a shielded enclosure shall extend at least 1.5 metres beyond the test set-up boundary in each direction.

Discussion: *For the metallic ground plane, a copper ground plane with a thickness of 0.25 mm has been commonly used and satisfies the surface resistance requirements. Other metallic materials of the proper size and thickness needed to achieve the resistivity can be substituted.*

For metallic ground planes, the surface resistivity can be calculated by dividing the bulk resistivity by the thickness. For example, copper has a bulk resistivity of 1.75x10-8 Ω-metres. For a ground plane 0.25 mm thick as noted above, the surface resistance is:

1.7x10-8/2.5x10-4 = 6.8x10-5 Ω's per square

= 0.068 mΩ's per square

The requirement is 0.1 mΩ's per square

4.3.5.2 Composite Ground Plane

When the EUT is installed on a conductive composite ground plane, the surface resistivity of the typical installation shall be used. Composite ground planes shall be electrically bonded to the enclosure with means suitable to the material.

Discussion: *A copper ground plane has typically been used for all testing in the past. For most instances, this has been adequate. However, with the increasing use of composites, the appropriate ground plane will play a bigger role in the test results. Limited testing on both copper and conductive composite ground planes has shown some differences in electromagnetic coupling test results, thus the need exists to duplicate the actual installation, if possible. In some cases, it may be necessary to include several ground planes in the same test set-up if different units of the same EUT are installed on different materials in the installation.*

With the numerous different composite materials being used in installations, it is not possible to specify a general resistivity value. The typical resistivity of carbon composite is about 2000 times that of aluminium. The actual resistivity needs to be obtained from the installation contractor and used for testing.

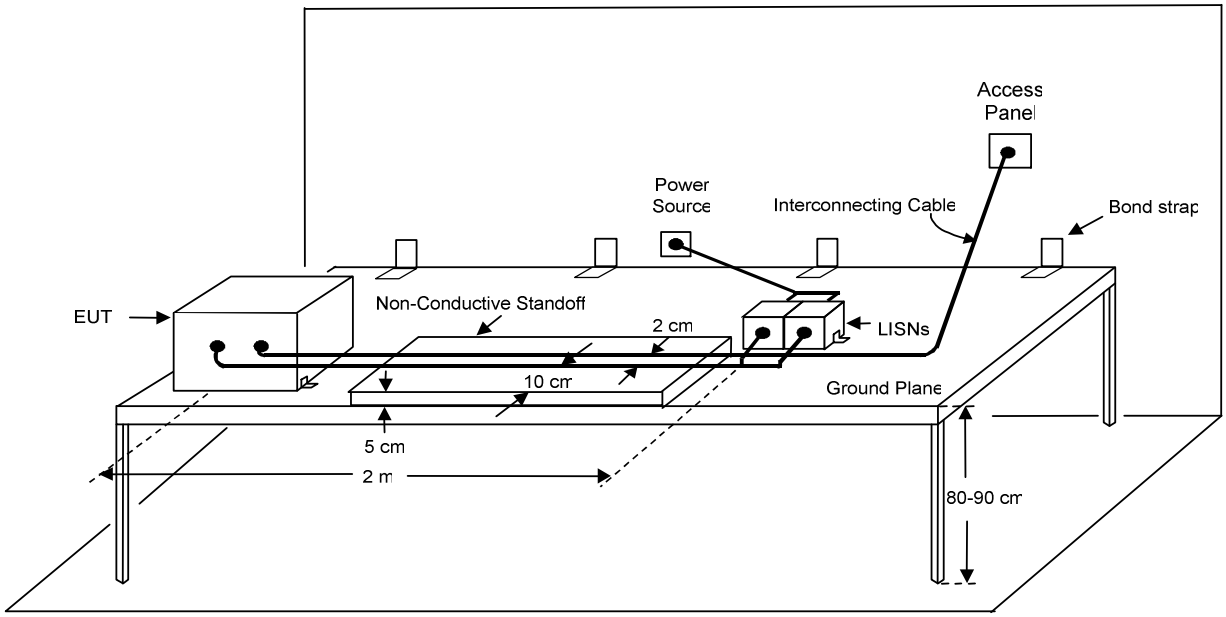

Figure 501-3 Test Set-Up for Conductive Surface Mounted EUT

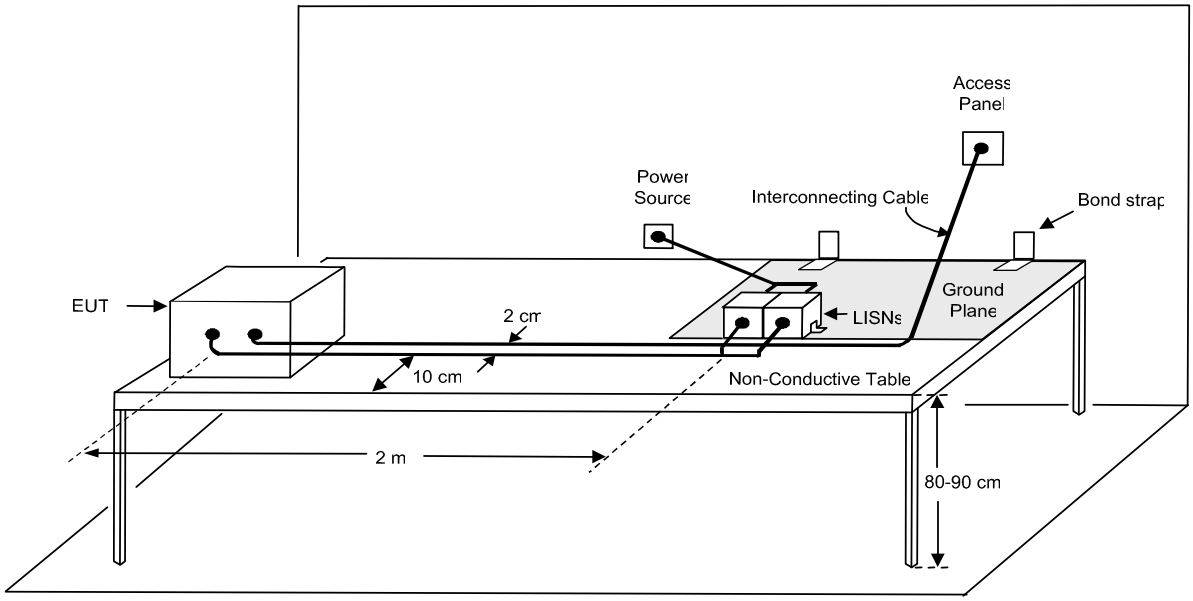

Figure 501-4 Test Set-Up for Non-Conductive Surface Mounted EUT

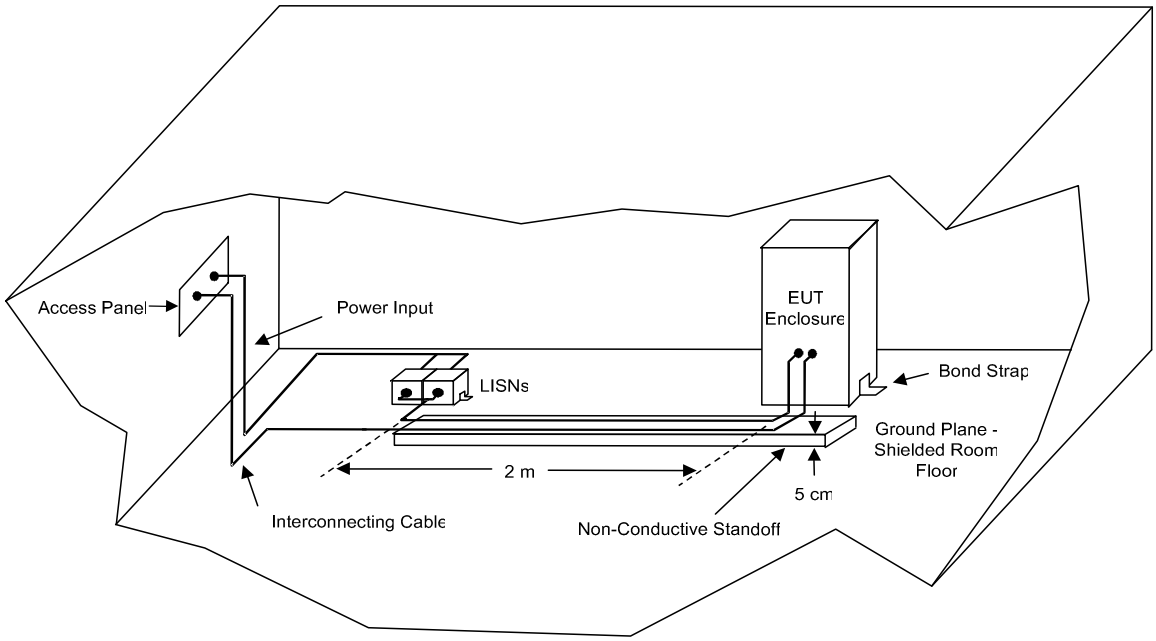

Figure 501-5 Test Set-Up for Free Standing EUT in Shielded Enclosure

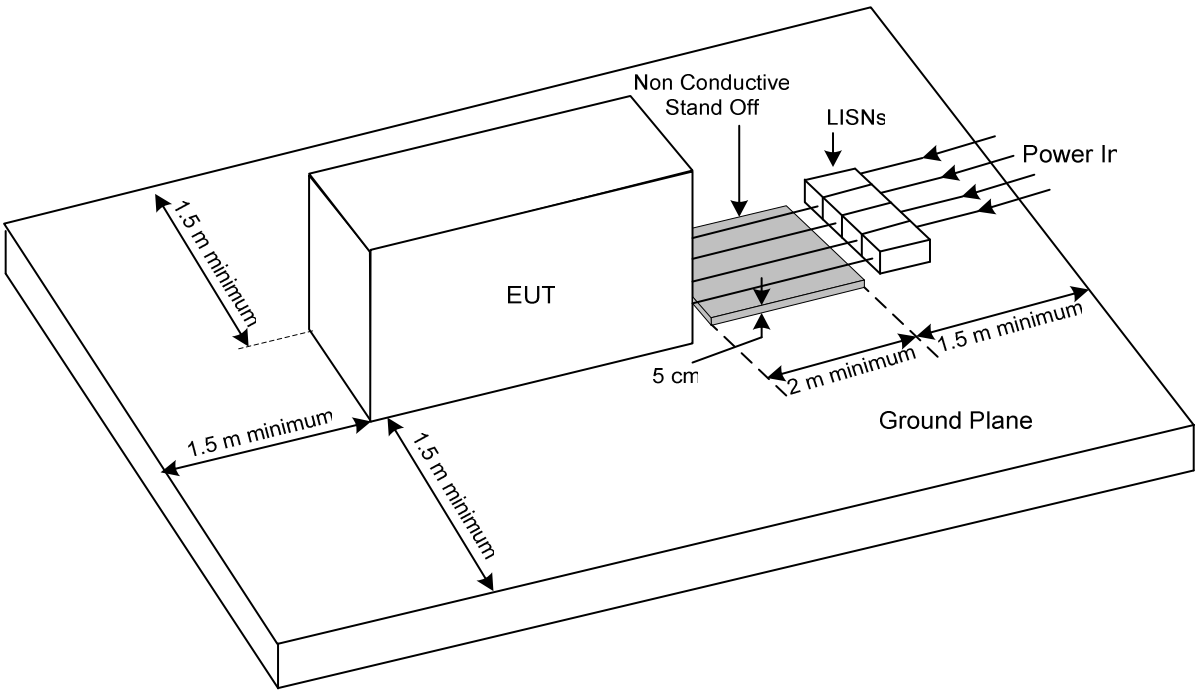

Figure 501-6 Test Set-Up for Free Standing EUT

4.3.6 Power Source Impedance

The impedance of power sources providing input power to the EUT shall be controlled by Line Impedance Stabilisation Networks (LISNs) for all measurement procedures of this document unless otherwise stated in a particular test procedure. LISNs shall not be used on output power leads. The

LISNs shall be located at the power source end of the exposed length of power leads specified in **Clause 4.3.8.6.2**. The LISN circuits shall be in accordance with the schematic shown in **Figures 501-7** and **501-8**. The LISN impedance characteristics shall be in accordance with **Figures 501-9** and **501-10**. The LISN impedance shall be calibrated or measured on a regular basis as defined in **Clause 4.3.11** under the following conditions:

a. The impedance shall be measured between the power output lead on the load side of the LISN and the metal enclosure of the LISN.

b. The signal output port of the LISN shall be terminated in 50 Ω.

c. The power input terminal on the power source side of the LISN shall be unterminated.

The impedance measurement results shall be provided in the EMITR.

Discussion: *The impedance is standardised to represent expected impedances in actual installations and to ensure consistent results between different test agencies. The intent of these devices was to determine the current generator portion of a Norton current source model. If the impedance of the interference source was also known, the interference potential of the source could be analytically determined for particular circumstances in the installation. A requirement was never established for measuring the impedance portion of the source model. More importantly, concerns arose over the test configuration influencing the design of power line filtering. Optimised filters are designed based on knowledge of both source and load impedances. Significantly different filter designs will result for the 10 µF capacitor loading versus the impedance loading shown in* ***Figure 501-9****.*

LISNs are not used on output power leads. Emission measurements using LISNs are performed on input power leads because the EUT is using a power source common to many other equipment items and the EUT must not degrade the quality of the power. When the EUT is the source of power, the issue is completely different since the electrical characteristics of the power required are controlled by the defined power quality requirements. Output power leads should be terminated with appropriate electrical loading that produces potentially worst-case emission and susceptibility characteristics.

The particular configuration of the LISN is specified for several reasons. A number of experiments were performed to evaluate typical power line impedances present in a shielded room on various power input types both with and without power line filters and to assess the possible methods of controlling the impedance. An approach was considered for the standard to simply specify an impedance curve from 30 Hz to 100 MHz. This would have allowed the test agency to meet the impedance using whatever means the agency found suitable. The experiments showed that there were no straightforward techniques to maintain desired controls over the entire frequency range.

A specific 50 µH LISN (see Ref [10}) was selected to maintain a standardised control on the impedance as low as 10 kHz. 5 µH LISNs provide little control below 100 kHz, however where extended frequency range testing is required above 10 MHz these will still be used due to the instability of the 50 µH LISN at higher frequencies see ***Figures 501-8*** *and* ***501-10****. Impedance control below 10 kHz is difficult. From evaluations of several 50 µH LISN configurations, the one specified demonstrated the best overall performance for various shielded rooms filtering variations. Near 10 kHz, the reactance's of the 50 µH inductor and 8 µF capacitor, cancel and the LISN is effectively a 5 Ω resistive load across the power line.*

Using a common LISN is important for standardisation reasons. However, the use of alternative LISNs may be desirable in certain application where the characteristics of the LISN may not be representative of the actual installation and the design of EUT circuitry is being adversely affected. For example, there are issues with switching power supply stability and the power source impedance seen by the power supply. The 50 µH inductor in the LISN represents the inductance of power distribution wiring running for approximately 50 metres. For a large platform, such as a ship or cargo aircraft, this value is quite representative of the actual installation. However, for smaller platforms such as fighter aircraft, inductance values may be substantially lower than 50 µHs and hence the 5 µH LISN may be more appropriate.

Caution needs to be exercised in using the 50 µH LISN for 400 Hz power systems. Some existing LISNs may not have components sufficient to handle the power dissipation requirements. At 115 V, 400 Hz, the 8 µF capacitor and 5 Ω resistor will pass approximately 2.3 A, which results in 26.5 W being dissipated in the resistor.

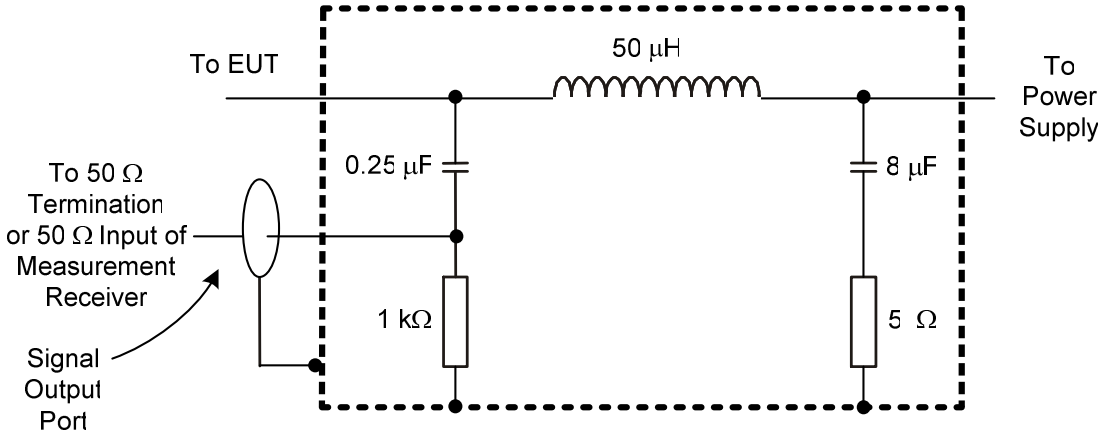

Figure 501-7 Typical 50 µH LISN schematic

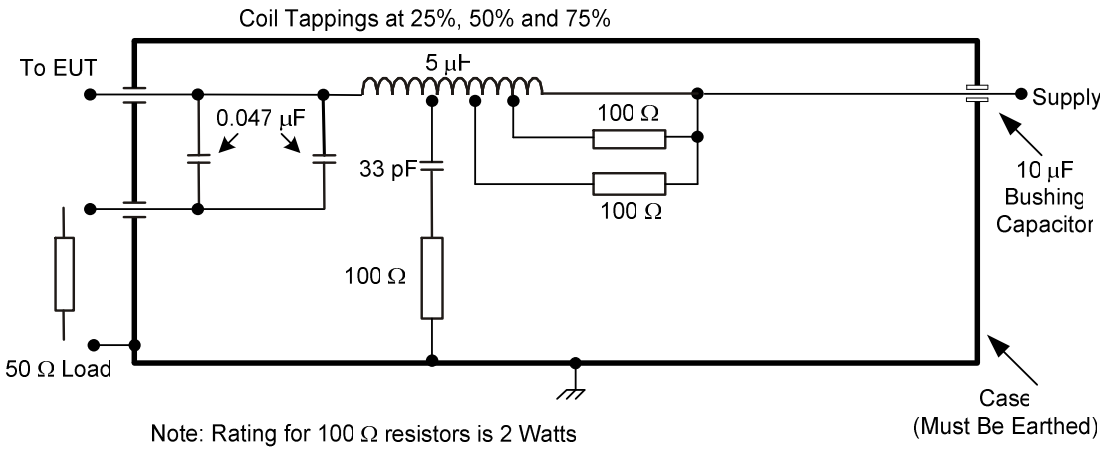

Figure 501-8 Typical 5 µH LISN schematic

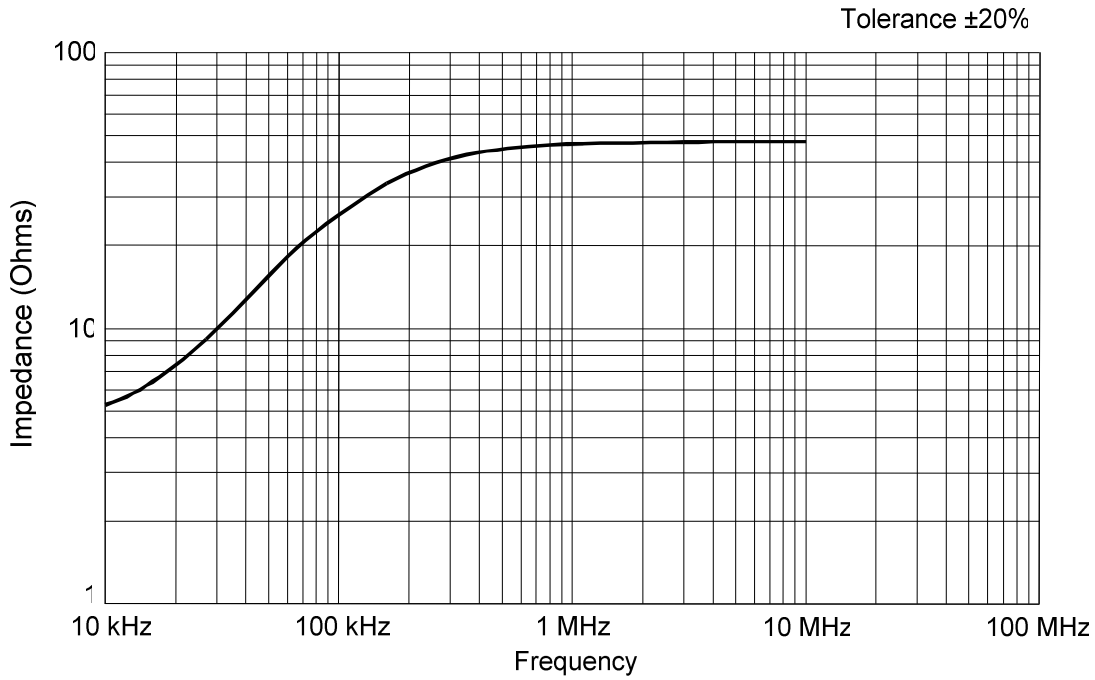

Figure 501-9 50 µH LISN Impedance

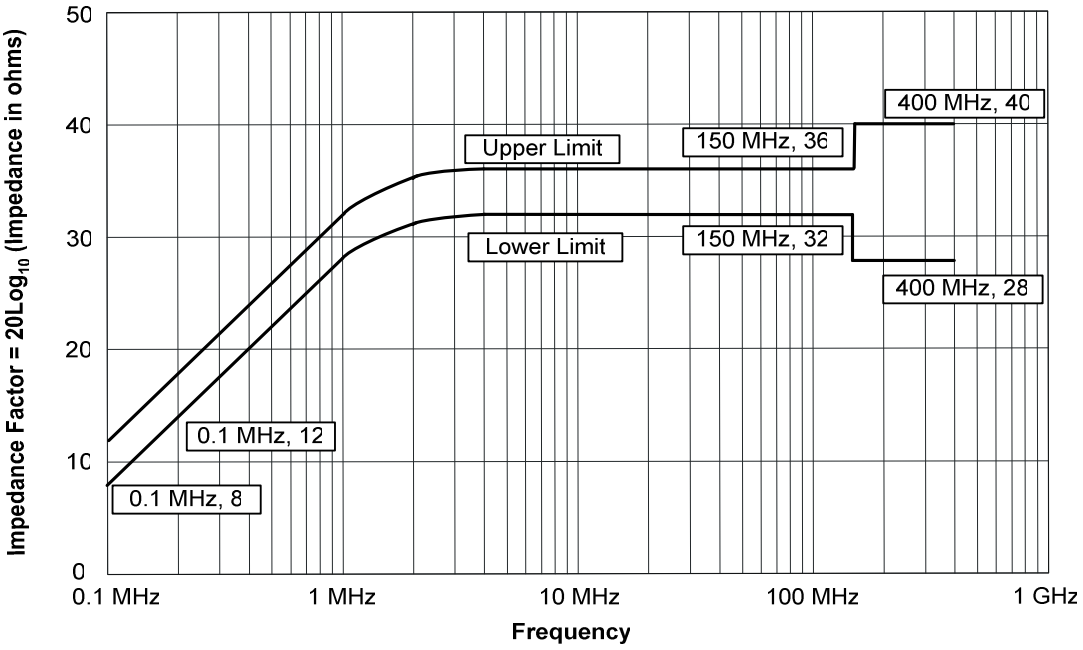

Figure 501-10 5 µH LISN Impedance

4.3.7 General Test Precautions

Discussion: *The requirements included here cover important areas related to improving test integrity and safety that need special attention. There are many other areas where test difficulties may develop. Some are described here.*

It is common for shields to become loose or broken at connectors on coaxial cables resulting in incorrect readings. There also are cases where centre conductors of coaxial cables break or separate. Periodic tests should be performed to ensure cable integrity. Special low loss cables may be required when testing at higher frequencies. Cables should also be verified for correct operation over the required frequency range of measurement. The resulting attenuation of those cables should be taken into account.

Caution needs to be exercised when performing emission testing at frequencies below approximately 10 kHz to avoid ground loops in the instrumentation, which may introduce faulty readings. A single-point ground often needs to be maintained. It is usually necessary to use isolation transformers at the measurement receiver and accessory equipment. The single-point ground is normally established at the access (feedthrough) panel for the shielded enclosure. However, if a transducer is being used which requires an electrical bond to the enclosure (such as the rod antenna counterpoise), the coaxial cable will need to be routed through the enclosure access panel without being grounded. Since the shielded room integrity will then be compromised, a normal multiple point grounded set-up needs to be re-established as low in frequency as possible.

Rather than routing the coaxial cable through the enclosure access panel without grounding it to the enclosure, a 50 Ω video isolation transformer may be connected to the grounded RF connector at the access panel inside the room. Normal connection of the measuring receiver is made to the grounded connector at the panel outside the room. This technique effectively breaks the ground loop without sacrificing the room's shielding integrity. The losses of the video isolation transformer must be accounted for in the measurement data. These devices are typically useful up to approximately 10 MHz.

If isolation transformers are found to be necessary in certain set-ups, problems may exist with items powered by switching power supplies. A solution is to use transformers that are rated at approximately five times the current rating of the item.

Solid-state instrumentation power sources have been found to be susceptible to radiated fields even to the extent of being shut down. It is best to keep these items outside of the shielded enclosure.

4.3.7.1 Accessory Equipment

Accessory equipment used in conjunction with measurement receivers shall not degrade measurement integrity.

Discussion: *Measurement receivers are generally designed to meet the limits of this standard so they do not contaminate the ambient for emission testing when they are used inside the shielded enclosure. However, accessory equipment such as computers, oscilloscopes, plotters, or other instruments used to control the receiver or monitor its outputs can cause problems. They may compromise the integrity of the receiver by radiating signals conducted out of the receiver from improperly treated electrical interfaces or may produce interference themselves and raise the ambient. Even passive devices such as headsets have been known to impact the test results.*

It is best to locate all of the test equipment outside of the shielded enclosure with the obvious exception of the transducer (antenna or current probe). Proper equipment location will ensure that the emissions being measured are being generated in the EUT only and will help ensure that the ambient requirements of ***Clause 4.3.4*** *are met. If the equipment must be used inside the enclosure or if testing is being conducted outside of an enclosure, the measurement receiver and accessory equipment should be located as far away from the transducers as practical to minimise any impact.*

4.3.7.2 Excess Personnel and Equipment

The test area shall be kept free of unnecessary personnel, equipment, cable racks, and desks. Only the equipment essential to the test being performed shall be in the test area or enclosure. Only personnel actively involved in the test shall be permitted in the enclosure.

Discussion: *Excess personnel and both electronic and mechanical equipment such as desks or cable racks in the enclosure can affect the test results. During testing in particular radiated emissions, all nonessential personnel and equipment need to be removed from the test site. Any object in the enclosure can significantly influence or introduce standing waves in the enclosure and thus alter the test results. The requirement to use RF absorber material will help to mitigate these effects. However, material performance is not defined below 80 MHz for practical reasons and standing waves continue to be a concern.*

4.3.7.3 Overload Precautions

Measurement receivers and transducers are subject to overload, especially receivers without preselectors and active transducers. Periodic checks shall be performed to assure that an overload condition does not exist. Instrumentation changes shall be implemented to correct any overload condition.

Discussion: *Overloads can easily go unnoticed if there is not an awareness of the possibility of an overload or active monitoring for the condition. The usual result is a levelling of the output indication of the receiver.*

Two types of overloads are possible. A narrowband signal such as a sinusoid can saturate any receiver or active transducer. Typical procedures for selecting attenuation settings for measurement receivers place detected voltages corresponding to emission limits well within the dynamic range of the receiver. Saturation problems for narrowband type signals will normally only appear for a properly configured receiver if emissions are significantly above the limits. Saturation can occur more readily when receivers are used to monitor susceptibility signals due to the larger voltages involved.

Overload from impulsive type signals with broad frequency content can be much more deceptive. This condition is most likely to occur with devices without a tuneable bandpass feature in the first stage of the signal input. Examples are preamplifier rod antennas and spectrum analysers without preselectors. The input circuitry is exposed to energy over a large portion of the frequency spectrum. Preselectors include a tuneable tracking filter which bandwidth limits the energy applied to the receiver front-end circuitry.

Measurement receiver overload to both narrowband and impulsive type signals can be evaluated by: applying 10 dB additional attenuation in the first stage of the receiver (before mixer circuitry) or external to the receiver. If overload is not present, the observed output will uniformly decrease by 10 dB.

Overload conditions for active antennas are normally published as part of the literature supplied with the antenna. For narrowband signals, the indicated level in the data can be reviewed with respect to the literature to evaluate overload. Levels are also published for impulsive type signals; however, these levels are not very useful since they usually assume that a flat field exists across the useable range of the antenna. In reality, the impulsive field will vary significantly with frequency and the antenna circuitry sees the integration of the spectral content of this field over its bandpass. The primary active antenna used is an active rod antenna. Overload can be evaluated by collapsing the rod and observing the change in indication. If overload is not present, the indicated level should drop approximately 8 dB (rod at 30% of its original height). The actual change for any particular manufacturer's product will depend on the telescoping design and can be determined by radiating a signal to the antenna that is within its linear range.

4.3.7.4 RF Hazards

Some tests in this standard will result in electromagnetic fields that are potentially dangerous to personnel. The permissible exposure levels (ICNIRP Guidelines [Ref 11]) shall not be exceeded in areas where personnel are present. Safety procedures and devices shall be used to prevent accidental exposure of personnel to RF hazards.

Discussion: *During some radiated susceptibility and radiated emission testing, NRS02, NRS03 and NRE03 in particular, fields may exceed the permissible exposure levels [Ref11]. During these tests, precautions must be implemented to avoid inadvertent exposure of personnel. Monitoring of the EUT during testing may require special techniques such as remotely connected displays external to the enclosure or closed circuit television to adequately protect personnel.*

4.3.7.5 Shock Hazard

Some of the tests require potentially hazardous voltages to be present. Extreme caution must be taken by all personnel to assure that all safety precautions are observed.

Discussion: *A safety plan and training of test personnel are normally required to assure that accidents are minimised. Test equipment manufacturers' precautions need to be followed, if specified. If these are not available, the test laboratory should establish adequate safety precautions and train all test personnel. Special attention should be observed for NCS06 since electronic enclosures are intentionally isolated from the ground plane for test purposes.*

4.3.7.6 Transmission Restrictions

Some of the tests require high level signals to be generated that could interfere with normal transmission approved frequency assignments. All such testing should be conducted in a shielded enclosure. Some open site testing may be feasible if prior co-ordination is accomplished with the appropriate authorities.

Discussion: *Radiated susceptibility NRS02 testing and possibly other tests will produce signals above authorisations. This situation is one of the reasons that shielded enclosures are normally required.*

4.3.8 EUT Test Configurations

The EUT shall be configured as shown in the general test set-ups of **Figures 501-2** through to **501-6** as applicable. These set-ups shall be maintained during all testing unless other direction is given for a particular test procedure.

Discussion: *Emphasis is placed on "maintaining" the specified set-up for all testing unless a particular test procedure directs otherwise.*

4.3.8.1 EUT Design Status

EUT hardware and software shall be representative of production. Software may be supplemented with additional code that provides diagnostic capability to assess performance.

Discussion: *It is important that the hardware and software being tested is the same as the equipment that is being fielded. Sometimes equipment is tested which is pre-production and contains circuit boards that do not include the final layout or software that is not the final version. Questions inevitably arise concerning the effects of the differences between the tested equipment and production configurations on the qualification status of the equipment. Analytically determining the impact is usually difficult.*

4.3.8.2 Bonding of EUT

Only the provisions included in the design of the EUT shall be used to bond units such as equipment case and mounting bases together, or to the ground plane. When bonding straps are required, they shall be identical to those specified in the installation drawings.

Discussion: *Electrical bonding provisions for equipment are an important aspect of platform installation design. Adequacy of bonding is usually one of the first areas reviewed when platform problems develop. Electrical bonding controls common mode voltages that develop between the equipment enclosures and the ground plane. Voltages potentially affecting the equipment will appear across the bonding interface when RF stresses are applied during susceptibility testing. Voltages will also develop due to internal circuit operation and will contribute to radiated emission profiles. Therefore, it is important that the test set-up use actual bonding provisions so that test results are representative of the intended installation.*

4.3.8.3 Shock and Vibration Isolators

EUTs shall be secured to mounting bases having shock or vibration isolators if such mounting bases are used in the installation. The bonding straps furnished with the mounting base shall be connected to the ground plane. When mounting bases do not have bonding straps, bonding straps shall not be used in the test setup.

Discussion: *Including shock and vibration isolators in the set-up when they represent the platform installation is important. The discussion above for* ***Clause 4.3.8.2*** *is also applicable to shock and vibration isolators; however, the potential effect on test results is even greater. Hard mounting of the equipment enclosures to the ground plane can produce a low impedance path across the bonding interface over most of the frequency range of interest. The bonding straps associated with isolators will typically represent significant impedances at frequencies as low as tens of kilohertz. The common mode voltages associated with these impedances will generally be greater than the hard mounted situation. Therefore, the influence on test results can be substantial.*

4.3.8.4 Safety Grounds

When external terminals, connector pins, or equipment grounding conductors are available for safety ground connections and are used in the actual installation, they shall be connected to the ground plane. Arrangement and length shall be in accordance with **Clause 4.3.8.6.1**. Shorter lengths shall be used if they are specified in the installation instructions.

Discussion: *Safety grounds used in equipment enclosures have been the source of problems during EMI testing. Since they are connected to the equipment enclosure, they would be expected to be at a very low potential with respect to the ground plane and a non-contributor to test results. However, the wire lengths within enclosures are often sufficiently long that coupling to them results from noisy circuits. Also, safety grounds can conduct induced signals from external sources and reradiate within the equipment enclosure. Therefore, they must be treated similarly to other wiring.*

4.3.8.5 Orientation of EUTs

EUTs shall be oriented such that surfaces, which produce maximum radiated emissions and respond most readily to radiated signals, face the measurement antennas. Bench mounted EUTs shall be located 10 ±2 cm from the front edge of the ground plane subject to allowances for providing adequate room for cable arrangement as specified below.

Discussion: *Determination of appropriate surfaces is usually straightforward. Seams on enclosures that have metal-to-metal contact or contain EMI gaskets rarely contribute and should be considered low priority items. Prime candidates are displays such as video screens, ventilation openings, and cable penetrations. In some cases, it may be necessary to probe the surfaces with a sensor and measurement receiver to decide on EUT orientation.*

Previous national military standards specifically required probing with a loop antenna to determine localised areas producing maximum emissions or susceptibility for radiated electric field testing. The test antennas were to be placed 1 metre from the identified areas. The requirement was not included in this standard due to difficulties in applying the requirement and the result that probing was often not performed. Probing implies both scanning in frequency and physical movement of the probe. These two actions cannot be performed in a manner to cover all physical locations at all frequencies. A complete frequency scan can be performed at particular probe locations and movement of the probe over the entire test set-up can be performed at particular frequencies. The detailed requirements on the use of multiple antenna positions and specific requirements on the placement of the antennas in test procedures for NRE02 and NRS02 minimise concerns with the need to probe.

4.3.8.6 Construction and Arrangement of EUT Cables

Electrical cable assemblies shall simulate actual installation and usage. Shielded cables or shielded leads within cables shall be used only if they have been specified in installation requirements. Input (primary) power leads, returns and wire grounds shall not be shielded.

Cables shall be checked against installation requirements to verify proper construction techniques such as use of twisted pairs, shielding, and shield terminations. Details on the cable construction used for testing shall be included in the EMITP.

Discussion: *For most EUTs, electrical interface requirements are covered in interface control or similar documents. Co-ordination between equipment manufacturers and system integration organisations is necessary to ensure a compatible installation from both functional and electromagnetic interference standpoints. For general purpose EUTs, which may be used in many different installations, either the equipment specifications cover the interface requirements or the manufacturers publish recommendations in the documentation associated with the equipment.*

Equipment manufacturers sometimes contend that failures during EMI testing are not due to their equipment and can be cured simply by placing overall shields on the interface cabling. High-level emissions are often caused by electronic circuits within EUT enclosures coupling onto cables simulating the installation, which interface, with the EUT. Overall shielding of the cabling is certainly permissible if it is present in the installation. However, the use of overall shielding that is not representative of the installation would result in test data that is useless. Also, overall shielding of cabling in some installations is not a feasible option due to weight and maintenance penalties. The presence of platform structure between cabling and antennas on a platform is not an acceptable reason for using overall shields on cables for testing in accordance with this standard. The presence of some platform shielding is a basic assumption.

An issue that arises with power leads concerns the use of shielding. It is unusual for power leads to be shielded in the actual installation. If they come directly off a prime power bus, shielding can only be effective if the entire bus is shielded end-to-end. Since buses normally distribute power to many locations, it is not practical to shield them. An exception to this situation is when power is derived from an intermediate source that contains filtering. Shielding between the intermediate source and the EUT will then be effective. When it is proposed that shielded power leads be used in the test set-up, the configuration needs to be researched to ensure that it is correct. There may be instances when published interface information is not available. In this case, overall shielding is not to be used. Individual circuits are to be treated as they typically would for that type of interface with shielding not used in questionable cases.

For some testing performed in the past using bulk cable drive techniques, overall cable shields were routinely removed and the injected signal was applied to the core wiring within the shield. The intent of this standard is to test cables as they are configured in the installation. If the cable uses an overall shield, the test signal is applied to the overall shielded cable. If the procuring agency desires that the test be performed on the core wiring, specific wording needs to be included in contractual documentation.

In some instances, Navy surface ship applications specify shielded power leads for a particular length of run. The shielded arrangement may be simulated in the test setup. Since unshielded power

distribution wiring will be present at some point in the installation, an additional length of unshielded power leads (not less than 2 meters) should normally be added and routed parallel to the front plane of the test setup boundary during radiated testing. Approval of the procuring activity is required for using power leads that are entirely shielded. The additional unshielded cable should not be used during conducted emissions testing.

4.3.8.6.1 Interconnecting Leads and Cables

Individual leads shall be grouped into cables in the same manner as in the actual installation. Total interconnecting cable lengths in the set-up shall be the same as in the actual platform installation. If a cable is longer than 10 metres, at least 10 metres shall be included. When cable lengths are not specified for the installation, cables shall be sufficiently long to satisfy the conditions specified below. At least the first 2 metres (except for cables which are shorter in the actual installation) of each interconnecting cable associated with each enclosure of the EUT shall be run parallel to the front boundary of the set-up. Remaining cable lengths shall be routed to the back of the set-up and shall be placed in a zigzagged arrangement. When the set-up includes more than one cable, individual cables shall be separated wherever possible by 2 cm measured from their outer circumference. For bench top set-ups using ground planes, the cable closest to the front boundary shall be placed 10 cm from the front edge of the ground plane. All cables shall be supported 5 cm above the ground plane.

Discussion: *Actual lengths of cables used in installations are necessary for several reasons. At frequencies below resonance, coupling is generally proportional to cable length. Resonance conditions will be representative of the actual installation. Also, distortion and attenuation of intentional signals due strictly to cable characteristics will be present and potential susceptibility of interface circuits to induced signals will therefore be similar to the actual installation.*

Zigzagging of long cables is accomplished by first placing a length of cable in an open area and then reversing the direction of the cable run by 180 degrees each time a change of direction is required. Each subsequent segment is farther from the first. Individual segments of the cable are parallel and should be kept 2 cm apart. The zigzagging of long cables rather than coiling is to control excess inductance. A 2 cm spacing between cables is required to expose all cabling to the test antennas and limit coupling of signals between cables. The 10 cm dimension for cables from the front edge of the ground plane ensures that there is sufficient ground plane surface below the first cable to be effective. The 5 cm stand-offs standardise loop areas available for coupling and capacitance to the ground plane. The standoffs represent routing and clamping of cables in actual installations a fixed distance from structure.

The requirement that the first 2 metres of each interconnecting cable associated with each enclosure of the EUT be routed parallel to the front boundary of the set-up is intended to ensure that radiated emissions and susceptibility testing properly assesses the performance of the EUT. Noise signals developed within the EUT and conducted outside on electrical interfaces will tend to be attenuated as they travel along interconnecting cables, particularly at frequencies where the associated wavelength is becoming short compared with the cable length. Similarly, induced signals on interconnecting cables from radiated susceptibility fields will be attenuated as they travel along the cable. Requiring that the first 2 metres of the cabling be exposed therefore maximises the effects of potential radiated coupling.

In some military applications, there can be over 2000 cables associated with a subsystem. In most cases where large numbers of cables are involved, there will be many identical cable interfaces connected to identical circuitry. Testing of every cable interface is not necessary in this situation. The EMITP should document instances where these circumstances exist and should propose which cables are to be included in the set-up and to be tested.

4.3.8.6.2 Input (Primary) Power Leads

Two metres of input power leads (including neutrals and returns) shall be routed parallel to the front edge of the set-up in the same manner as the interconnecting leads. Each input power lead, including neutrals and returns, shall be connected to a LISN (see **Clause 4.3.6**). Power leads that are bundled, as part of an interconnecting cable in the actual installation, shall be separated from the bundle and routed to the LISNs (outside the shield of shielded cables). After the 2 metre exposed length, the power leads shall be terminated at the LISNs in as short a distance as possible. The total length of power lead from the EUT electrical connector to the LISNs shall not exceed 2.5 metres. All power leads shall be supported 5 cm above the ground plane. If the power leads are twisted in the actual installation, they shall be twisted up to the LISNs.

Discussion: *Appropriate power lead length is a trade-off between ensuring sufficient length for efficient coupling of radiated signals and maintaining the impedance of the LISNs. To keep a constant set-up, it is undesirable to change the power lead length for different test procedures. Requiring a 2 metre exposed length is consistent with treatment of interconnecting leads for radiated concerns. Wiring inductance 5 cm from a ground plane is approximately 1 µH/metre. At 1 MHz this inductance has an impedance of approximately 13 Ω, which is significant with respect to the LISN requirement.*

While it is common to require that neutrals and returns be isolated from equipment chassis within equipment enclosures, there are some cases where the neutral or return is tied directly to chassis. If the equipment is electrically bonded to metallic system structure in the installation and the system power source neutral or return is also tied to system structure, power return currents will flow primarily through system structure rather than through wiring. For this case, a LISN should normally be used only on the high side of the power. There are other installations, such as many types of aircraft, where returns and neutrals are isolated within the equipment, but they are often connected to system structure outside of the equipment enclosure. This practice allows for the flexibility of using a wired return, if necessary. For this situation, LISNs should normally be used on neutrals and returns to test for the wired return configuration.

The LISN requirement standardises impedance for power leads. While signal and control circuits are usually terminated in specified impedances, power circuit impedances are not usually well defined. The LISN requirement applies to all input prime power leads. The LISN requirement does not apply to output power leads. These leads should be terminated after the 2 metre exposed length in a load representing worst-case conditions. This load would normally draw the maximum current allowed for the power source.

*The construction of the power cable between the EUT and the LISNs must be in accordance with the requirements of **Clause 4.3.8.6**. For example, if a twisted triplet is used to distribute three phase ungrounded power in the actual installation, the same construction should be used in the test set-up. The normal construction must be interrupted over a sufficient length to permit connection to the LISNs.*

4.3.8.7 Electrical and Mechanical Interfaces

All electrical input and output interfaces shall be terminated with either the actual equipment from the platform installation or loads which simulate the electrical properties (impedance, grounding, balance, and so forth) present in the actual installation. Signal inputs shall be applied to all applicable electrical interfaces to exercise EUT circuitry. EUTs with mechanical outputs shall be suitably loaded. When variable electrical or mechanical loading is present in the actual installation, testing shall be performed under expected worst-case conditions. When active electrical loading (such as a test set) is used, precautions shall be taken to insure the active load meets the ambient requirements of **Clause 4.3.4** when connected to the set-up, and that the active load does not respond to susceptibility signals. Antenna ports on the EUT shall be terminated with shielded, matched loads.

Discussion: *The application of signals to exercise the electrical interface is necessary to effectively evaluate performance. Most electronic subsystems on platforms are highly integrated with large amounts of digital and analog data being transferred between equipment. The use of actual*

platform equipment for the interfacing eliminates concerns regarding proper simulation of the interface. The interfaces must function properly in the presence of induced levels from susceptibility signals. Required isolation may be obtained by filtering the interface leads at the active load and either shielding the load or placing it outside of the shielded enclosure. The filtering should be selected to minimise the influence on the interface electrical properties specified above. For proper simulation, filtering at the loads should be outside the necessary bandwidth of the interface circuitry.

Antenna ports are terminated in loads for general set-up conditions. Specific test procedures address electromagnetic characteristics of antenna ports and required modifications to the test set-up.

4.3.9 Operation of EUT

During emission measurements, the EUT shall be placed in an operating mode, which produces maximum emissions. During susceptibility testing, the EUT shall be placed in its most susceptible operating mode. For EUTs with several available modes (including software controlled operational modes), a sufficient number of modes shall be tested for emissions and susceptibility such that all circuitry is evaluated. The rationale for modes selected shall be included in the EMITP.

Discussion: *The particular modes selected may vary for different test procedures. Considerations for maximum emissions include conditions which cause the EUT to draw maximum prime power current, result in greatest activity in interface circuit operation, and generate the largest current drain on internal digital clock signals. Settings for a radar could be adjusted such that an output waveform results which has the highest available average power. Data bus interfaces could be queried frequently to cause constant bus traffic flow. Any modes of the EUT that are considered mission critical in the installation should be evaluated during susceptibility testing.*

A primary consideration for maximum susceptibility is placing the EUT in its most sensitive state for reception of intentional signals (maximum gain). An imaging sensor would normally be evaluated with a scene meeting the most stringent specifications for the sensor. RF receivers are normally evaluated using an input signal at the minimum signal to noise specification of the receiver. An additional consideration is ensuring that all electrical interfaces that intentionally receive data are exercised frequently to monitor for potential responses.

4.3.9.1 Operating Frequencies for Tuneable RF Equipment

Measurements shall be performed with the EUT tuned to not less than three frequencies within each tuning band, tuning unit, or range of fixed channels, consisting of one mid-band frequency and a frequency within ±5 % from each end of each band or range of channels.

Discussion: *Tuned circuits and frequency synthesis circuitry inside RF equipment typically vary in characteristics such as response, rejection, and spectral content of emissions as they are set to different frequencies. Several test frequencies are required simply to obtain a sampling of the performance of the EUT across its operating range.*

RF equipment that operates in several frequency bands or performs multiple functions is becoming more common. One example is a radio transceiver with VHF-FM, VHF-AM, and UHF-AM capability. Other devices are adaptive over large frequency ranges and can be programmed to perform different functions as the need arises. To meet the intent of the requirement to perform measurements at three frequencies within each tuning band, tuning unit, or range of fixed channels, each of the three functions of the radio in the example should be treated as separate bands, even if they are adjacent in frequency. Similarly, each function of adaptive RF equipment needs to be separately assessed.

The "value added" of performing all required tests at three frequencies within each band needs to be weighed against the added cost and schedule. The specific equipment design and intended function needs to be evaluated for each case.

*For example, performing NCS01 on a VHF-FM, VHF-AM, and UHF-AM combined receiver–transmitter would require that the test be performed a minimum of 18 times (3 frequencies * 3 bands * 2 modes). Since NCS01 performance generally is related to the power supply design and load rather than the specific tuned frequency, doing the test for more than a few conditions may not add much value. If*

*there is a problem, a typical result is "hum" on the secondary power outputs that is transmitted with the RF or that appears on the output audio of the receiver portion of the equipment. An appropriate approach for this particular requirement might be to test at one mid-band frequency for each of the three functions for both transmit and receive (6 tests – 3 frequencies * 2 modes).*

Other requirements need to be evaluated similarly. Since NCE02 emissions are mainly caused by power supply characteristics, testing at a mid-band frequency for each band just in the transmit mode might be adequate. For requirements with frequency coverage that extends into the operating frequency range of the equipment, such as NRE02, NCE03, and NRS02, testing at three frequencies per band may be necessary.

4.3.9.2 Operating Frequencies for Spread Spectrum Equipment

Operating frequency requirements for two major types of spread spectrum equipment shall be as follows:

a. Frequency hopping. Measurements shall be performed with the EUT utilising a hop set which contains a minimum of 30% of the total possible frequencies. This hop set shall be divided equally into three segments at the low, mid and high end of the EUT's operational frequency range.

b. Direct sequence. Measurements shall be performed with the EUT processing data at the highest possible data transfer rate.

Discussion: *During testing it is necessary to operate equipment at levels that they will experience during normal field operations. This is to allow for a realistic representation of the emission profile of the EUT during radiated and conducted testing and to provide realistic loading and simulation of the EUT during radiated and conducted susceptibility testing.*

Frequency hopping: Utilisation of a hopset that is distributed across the entire operational spectrum of the EUT will help assure that those internal circuitry dependent on the exact EUT transmit frequency being used is active intermittently during processing of the entire pseudo random stream. The fast operating times of hopping receivers/transmitters versus the allowable measurement times of the measurement receivers being used (see ***Clause 4.3.10.3****) will allow a representative EUT emission signature to be captured.*

Direct sequence: Requiring the utilisation of the highest data transfer rate used in actual operation of the EUT should provide a representative worst-case radiated and conducted emission profile. Internal circuitry will operate at its highest processing rate when integrating the data entering the transmitter, and then resolving (disintegrating) the data back once again on the receiver end. Additionally, the data rate will need to be an area of concentration during all susceptibility testing.

4.3.9.3 Susceptibility Monitoring

The EUT shall be monitored during susceptibility testing for indications of degradation or malfunction. This monitoring is normally accomplished through the use of built-in-test (BIT), visual displays, aural outputs, and other measurements of signal outputs and interfaces. Monitoring of EUT performance through installation of special circuitry in the EUT is permissible; however, these modifications shall not influence test results.

Discussion: *Most EUTs can be adequately monitored through normal visual and aural outputs, self-diagnostics, and electrical interfaces. The addition of special circuitry for monitoring can present questions related to its influence on the validity of the test results and may serve as an entry or exit point for electromagnetic energy.*

The monitoring procedure needs to be specified in the EMITP and needs to include allowances for possible weaknesses in the monitoring process to assure the highest probability of finding regions of susceptibility.

4.3.10 Use of Measurement Equipment

Measurement equipment shall be as specified in the individual test procedures of this standard. Any frequency selective measurement receiver may be used for performing the testing described in this standard. Provided that the receiver characteristics (that is, sensitivity, selection of bandwidths, detector functions, dynamic range, and frequency of operation) meet the constraints specified in this standard and are sufficient to demonstrate compliance with the applicable limits. Typical instrumentation characteristics may be found in ANSI C63.2 Ref [12].

Discussion: *Questions frequently arise concerning the acceptability for use of measurement receivers other than instruments that are specifically designated "field intensity meters" or "EMI receivers." Most questions are directed toward the use of spectrum analysers. These instruments are generally acceptable for use. However, depending on the type, they can present difficulties that are not usually encountered with the other receivers. Sensitivity may not be adequate in some frequency bands requiring that a low noise preamplifier be inserted before the analyser input. Impulse type signals from the EUT with broad spectral content may overload the basic receiver or preamplifier. The precautions of* ***Clause 4.3.7.3*** *must be observed. Both of these concerns can usually be adequately addressed by the use of a preselector with the analyser. These devices typically consist of a tuneable filter which tracks the analyser followed by a preamplifier.*

Ref [12] represents a co-ordinated position from industry on required characteristics of instrumentation receivers. This document can be used when assessing the performance of a receiver.

Many of the test procedures require non-specialised instrumentation that is used for many other purposes. The test facility is responsible for selecting instrumentation that has characteristics capable of satisfying the requirements of a particular test procedure.

Current probes used for EMI testing are more specialised instrumentation. These devices are current transformers with the circuit under test forming a single turn primary. They are designed to be terminated in 50 Ω. Current probes are calibrated using transfer impedance that is the ratio of the voltage output of the probe across 50 Ω to the current through the probe. Probes with higher transfer impedance provide better sensitivity. However, these probes also result in more series impedance added to the circuit with a greater potential to affect the electrical current level. The series impedance added by the probe is the transfer impedance divided by the number of turns in the secondary winding on the probe. Typical transfer impedances are 5 Ω or less. Typical added series impedance is 1 Ω or less.

4.3.10.1 Detector

A peak detector shall be used for all frequency domain emission and susceptibility measurements. This device detects the peak value of the modulation envelope in the receiver bandpass. Measurement receivers are calibrated in terms of an equivalent Root Mean Square (RMS) value of a sine wave that produces the same peak value. When other measurement devices such as oscilloscopes, non-selective voltmeters, or broadband field strength sensors are used for susceptibility testing, correction factors shall be applied for test signals to adjust the reading to equivalent RMS values under the peak of the modulation envelope.

Discussion: *The function of the peak detector and the meaning of the output indication on the measurement receiver are often confusing. Although there may appear to be an inherent discrepancy in the use of the terms "peak" and "RMS" together, there is no contradiction. All detector functions (that is peak, carrier, field intensity, and quasi-peak) process the envelope of the signal present in the receiver intermediate frequency (IF) section. All outputs are calibrated in terms of an equivalent RMS value. For a sine wave input to the receiver, the signal envelope in the IF section is a DC level and all detectors produce the same indicated RMS output. Calibration in terms of RMS is necessary for consistency. Signal sources are calibrated in terms of RMS. If a 0 dBm (107 dBμV) unmodulated signal is applied to the receiver, the receiver must indicate 0 dBm (107 dBμV).*

If there is modulation present on the signal applied to the receiver, the detectors respond differently. The IF section, of the receiver sees the portion of the applied signal within the bandwidth limits of the

IF. The peak detector senses the largest level of the signal envelope in the IF and displays an output equal to the RMS value of a sine wave with the same peak. The specification of a peak detector ensures that the worst-case condition for emission data is obtained. A carrier detector averages the modulation envelope based on selected charge and discharge time constants.

Figure 501-11 *shows the peak detector output for several modulation waveforms. An item of interest is that for a square wave modulated signal, which can be considered a pulse type modulation, the receiver can be considered to be displaying the RMS value of the pulse when it is on. Pulsed signals are often specified in terms of peak power. The RMS value of a signal is derived from the concept of power, and a receiver using a peak detector correctly displays the peak power.*

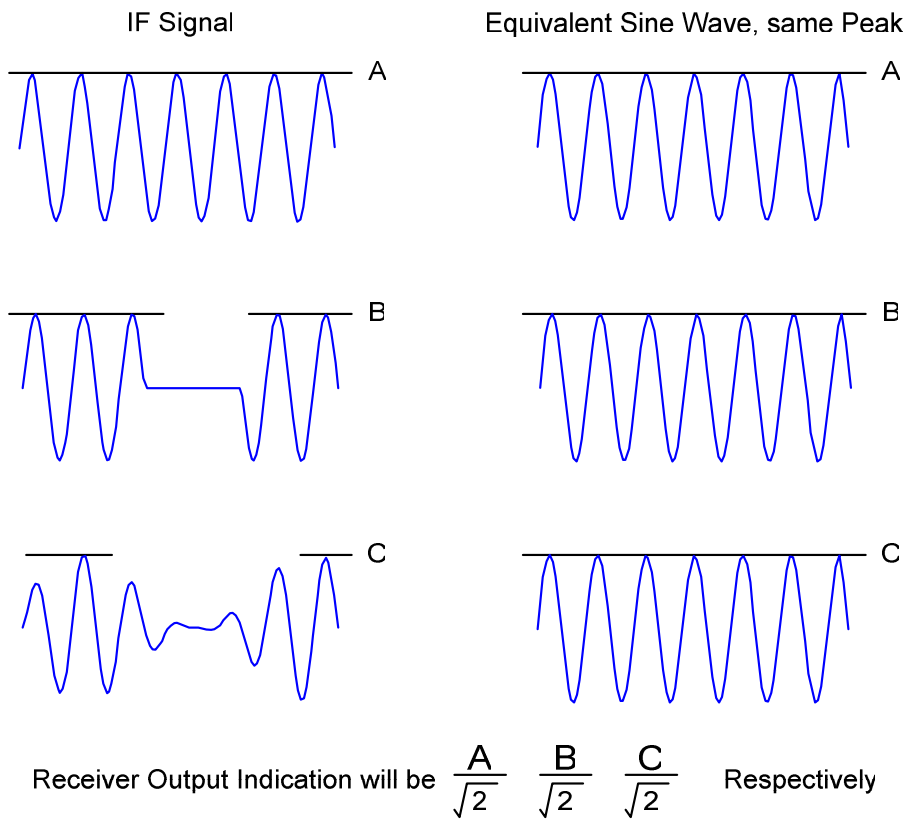

Figure 501-11 Peak Detector Response

All frequency domain measurements are standardised with respect to the response that a measurement receiver using a peak detector would provide. Therefore, when instrumentation is used which does not use peak detection; correction factors must be applied for certain signals. For an oscilloscope, the maximum amplitude of the modulated sine wave measured from the DC level is divided by 1.414 (square root of 2) to determine the RMS value at the peak of the modulation envelope.

Correction factors for other devices are determined by evaluating the response of the instrumentation to signals with the same peak level with and without modulation. For example, a correction factor for a broadband field sensor can be determined as follows. Place the sensor in an unmodulated field and note the reading. Apply the required modulation to the field ensuring that the peak value of the field is the same as the unmodulated field. For pulse type modulation, most signal sources will output the same peak value when modulation is applied. Amplitude modulation increases the peak amplitude of the signal and caution must be observed. Note the new reading. The correction factor is simply the

reading with the unmodulated field divided by the reading with the modulated field. If the meter read 10 V/m without modulation and 5 V/m with modulation, the correction factor is 2. The evaluation should be tried at several frequencies and levels to ensure that a consistent value is obtained. When subsequently using the sensor for measurements with the evaluated modulation, the indicated reading is multiplied by the correction factor to obtain the correct reading for peak detection.

4.3.10.2 Computer-Controlled Instrumentation

A description of the operations being directed by software for computer-controlled instrumentation shall be included in the EMITP. Verification techniques used to demonstrate proper performance of the software shall also be included. If commercial software is being used then, as a minimum, the manufacturer, model and revision of the software needs to be provided. If the software is developed in-house, then documentation needs to be included that describes the methodology being used for the control of the test instrumentation and how the software revisions are handled.

Discussion: *Computer software obviously provides excellent opportunities for automating testing. However, it also can lead to errors in testing if not properly used or if incorrect code is present. It is essential that users of the software understand the functions it is executing, know how to modify parameters (such as transducer or sweep variables) as necessary, and perform sanity checks to ensure that the overall system performs as expected. As a minimum, the following data should be included in the EMITP:*

a. *Sweep Times*

b. *How correction factors* are handled

c. *How final data are determined and presented*

d. *Audit trail that provides details on what part of the software controls which functions.*

4.3.10.3 Emission Testing

4.3.10.3.1 Bandwidths

The measurement receiver bandwidths listed in **Table 501-2** shall be used for emission testing. These bandwidths are specified at the 6 dB down points for the overall selectivity curve of the receivers. Video filtering shall not be used to bandwidth limit the receiver response. If a controlled video bandwidth is available on the measurement receiver, it shall be set to its greatest value. Larger receiver bandwidths may be used; however, they may result in higher measured emission levels.

Note: NO BANDWIDTH CORRECTION FACTORS SHALL BE APPLIED TO TEST DATA DUE TO THE USE OF LARGER BANDWIDTHS.

Frequency Range	6 dB Bandwidth	Dwell Time*	Minimum Measurement Time Analog Measurement Receiver
30 Hz - 1 kHz	10 Hz	0.15 sec	0.015 sec/Hz
1 kHz - 10 kHz	100 Hz	0.015 sec	0.15 sec/kHz
10 kHz - 150 kHz	1 kHz	0.015 sec	0.015 sec/kHz
150 kHz - 30 MHz	10 kHz	0.015 sec	1.5 sec/MHz
30 MHz - 1 GHz	100 kHz	0.015 sec	0.15 sec/MHz
Above 1 GHz	1 MHz	0.015 sec	15 sec/GHz
* Alternative Scanning Technique Multiple faster sweeps with the use of a maximum hold function may be used if the total scanning time is equal to or greater than the Minimum Measurement Time defined above.			

Table 501-2 Bandwidth and Measurement Time

Discussion: *The bandwidths specified in **Table 501-2** are consistent with the recommended available bandwidths and the bandwidth specification technique for receivers contained in ANSI C63.2 [Ref 12]. Existing receivers have bandwidths specified in a number of different ways. Some are given in terms of 3 dB down points. The 6 dB bandwidths are usually about 40% greater than the 3 dB values. Impulse bandwidths are usually very similar to the 6 dB bandwidths. For Gaussian shaped bandpasses, the actual value is 6.8 dB.*

The frequency break point between using a 1 kHz and 10 kHz bandwidth was modified from 250 kHz to 150 kHz in this version of the standard to harmonise with commercial EMI standards.

In order not to restrict the use of presently available receivers that do not have the specified bandwidths, larger bandwidths are permitted. The use of larger bandwidths can produce higher detected levels for wide bandwidth signals. The prohibition against the use of correction factors is included to avoid any attempts to classify signals.

The sensitivity of a particular receiver is an important factor in its suitability for use in making measurements for a particular requirement. NRE02 is usually the most demanding requirement. The sensitivity of a receiver at room temperature can be calculated as follows:

Sensitivity in dBm = -114 dBm/MHz + bandwidth (dBMHz) + noise figure (dB) Equ 1

As noted in the equ 1, reducing the noise figure is the only way (cryogenic cooling is not practical) to improve sensitivity for a specified bandwidth. The noise figure of receivers can vary substantially depending on the front-end design. System noise figure can be improved through the use of low noise preamplifiers. The resulting noise figure of a preamplifier/receiver combination can be calculated from the following. All numbers are real numbers. Conversion to decibels (10 log) is necessary to determine the resulting sensitivity in the above formula:

System noise figure = preamp noise figure + (receiver noise figure)/(preamp gain) Equ 2

Since preamplifiers are broadband devices, issues of potential overload need to be addressed. Separate preselectors, which are available for some spectrum analysers, usually combine a tracking filter with a low noise preamplifier to eliminate overload. Preselection is an integral part of many receivers.

*Example of; multiple scan times derived from **Table 501-2** are shown in **Table 501-3**. The frequency bands listed do not imply that those entire bands should be scanned at one time. The requirements for frequency resolution defined in **Clause 4.3.10.3.4** "Emission data presentation" must be met.*

C1	C2	C3	C4	C5	C6	C7	C8	C9
Start Freq (Hz)	Stop Freq (Hz)	Span (Hz)	Resolution Bandwidth (Hz)	# of Steps	Dwell Time per Step (sec)	**Table 501-2** Single Sweep Time	Single Fast Sweep Time (sec)	# of Fast Sweeps to equal one **Table 501-2** Sweep
From Table 501-2	From Table 501-2	C2-C1	From Table 501-2	2 x (C3-C4)	From Table 501-2	C5 x C6	C5 / C4	C7 / C8
30	1 k	970	10	194	0.15	29.1	19.4	1.5
1 k	19 k	9 k	100	180	0.015	2.7	1.8	1.5
10 k	150 k	140 k	1 k	280	0.015	4.2	0.28	15
0.15 M	30 M	29.85 M	10 k	5970	0.015	89.55	0.597	150
30 M	1 G	970 M	100 k	19400	0.015	291	0.194	1500
1 G	18 G	17 G	1 M	34000	0.015	510	0.034	15000

Table 501-3 Derived Multiple Scan Times

*The multiple scan option can be an effective method for capturing signals that are intermittent with a low duty cycle rate "On" time and significant "Off" time. Scan times and number of scans should be controlled for known signal characteristics to enhance the probability of capturing these signals. Scan times and sweep speeds are subject to limitations per column 8 of **Table 501-3** which provides for enough dwell time for the IF filter to respond. Modern spectrum analyzers/ receivers have inhibits to prevent an uncalibrated sweep resulting from sweep speeds that are too fast for the final IF filter to respond. These types of signals form a Binomial type probability distribution for chance of capturing. Given the signal characteristics and the scanning parameters, the probability of capturing a signal can be reasonably estimated. Measurement receivers need to operate in a maximum hold mode such that the highest levels across the frequency band are recorded over the sequence of scans. The signal characteristics (cycle times) should be included in the EMITR, if available.*

4.3.10.3.2 Emission Identification

All emissions regardless of characteristics shall be measured with the measurement receiver bandwidths specified in **Table 501-2** and compared against the applicable limits. Identification of emissions with regard to narrowband or broadband categorisation is not applicable.

Discussion: *Requirements for specific bandwidths and the use of single limits are intended to resolve a number of problems. The significance of the particular bandwidths chosen for use by a test facility, were addressed by classification of the appearance of the emissions with respect to the chosen bandwidths. Emissions considered to, be broadband had to be normalised to equivalent levels in a 1 MHz bandwidth. The bandwidths and classification techniques used by various facilities were very inconsistent and resulted in a lack of standardisation. The basic issue of emission classification was often poorly understood and implemented. Requiring specific bandwidths with a single limit eliminates any need to classify emissions.*

An additional problem is that emission profiles from modern electronics are often quite complex. Some emission signatures have frequency ranges where the emissions exhibit white noise characteristics. Normalisation to a 1 MHz bandwidth using spectral amplitude assumptions based on impulse noise characteristics is not technically correct. Requiring specific bandwidths eliminates normalisation and this discrepancy.

4.3.10.3.3 Frequency Scanning

For emission measurements, the entire frequency range for each applicable test shall be scanned. Minimum measurement time for analog measurement receivers during emission testing shall be as specified in **Table 501-2**. Synthesized measurement receivers shall step in one-half bandwidth increments or less, and the measurement dwell time shall be as specified in **Table 501-2**. For equipment that operates such that potential emissions are produced at only infrequent intervals, times for frequency scanning shall be increased as necessary to capture any emissions.

Discussion: *For each emission test, the entire frequency range as specified for the applicable requirement must be scanned to ensure that all emissions are measured.*

Continuous frequency coverage is required for emission testing. Testing at discrete frequencies is not acceptable unless otherwise stated in a particular test procedure. The minimum scan times listed in ***Table 501-2*** *are based on two considerations. The first consideration is the response time of a particular bandwidth to an applied signal. This time is 1/(filter bandwidth). The second consideration is the potential rates (that is modulation, cycling, and processing) at which electronics operate and the need to detect the worst-case emission amplitude. Emission profiles usually vary with time. Some signals are present only at certain intervals and others vary in amplitude. For example, signals commonly present in emission profiles are harmonics of microprocessor clocks. These harmonics are very stable in frequency; however, their amplitude tends to change, as various circuitries are exercised and current distribution changes.*

The first entry in the table for analog measurement receivers of 0.015 sec/Hz for a bandwidth of 10 Hz is the only one limited by the response time of the measurement receiver bandpass. The response time is 1/bandwidth = 1/10 Hz = 0.1 seconds. Therefore, as the receiver tunes, the receiver bandpass must include any particular frequency for 0.1 seconds implying that the minimum scan time = 0.1 seconds/10 Hz = 0.01 seconds/Hz. The value in the table has been increased to 0.015 seconds/Hz to ensure adequate time. This increase by a multiplication factor of 1.5 results in the analog receiver having a frequency in its bandpass for 0.15 seconds as it scans. This value is the dwell time specified in the table for synthesised receivers for 10 Hz bandwidths. Since synthesised receivers are required to step in one-half bandwidth increments or less and dwell for 0.15 seconds, test time for synthesised receivers will be greater than analog receivers.

The measurement times for other table entries are controlled by the requirement that the receiver bandpass include any specific frequency for a minimum of 15 milliseconds (dwell time in table), which is associated with a potential rate of variation of approximately 60 Hz. As the receiver tunes, the receiver bandpass is required to include any particular frequency for the 15 milliseconds. For the fourth entry in the table of 1.5 seconds/MHz for a 10 kHz bandwidth, the minimum measurement time is 0.015 seconds/0.01 MHz = 1.5 seconds/MHz. A calculation based on the response time of the receiver would yield a response time of 1/bandwidth = 1/10 kHz = 0.0001 seconds and a minimum measurement time of 0.0001 seconds/0.01 MHz = 0.01 seconds/MHz. The longer measurement time of 1.5 seconds/MHz is specified in the table. If the specified measurement times are not adequate to capture the maximum amplitude of the EUT emissions, longer measurement times should be implemented.

Caution must be observed in applying the measurement times. The specified parameters are not directly available on measurement receiver controls and must be interpreted for each particular receiver. Also, the specified measurement times may be too fast for some data gathering devices such as real-time X-Y recording. Measurement receiver peak hold times must be sufficiently long for the mechanical pen drive on X-Y recorders to reach the detected peak value. In addition, the scan speed must be sufficiently slow to allow the detector to discharge after the signal is detuned so that the frequency resolution requirements of ***Clause 4.3.10.3.4*** *are satisfied.*

For measurement receivers with a "maximum hold" feature that retains maximum detected levels after multiple scans over a particular frequency range, multiple faster sweeps that produce the same minimum test times as implied by ***Table 501-2*** *are acceptable. For the situation noted in the requirement concerning equipment that produces emissions at only infrequent intervals, using the multiple scan technique will usually provide a higher probability of capturing intermittent data than using one slower scan.*

4.3.10.3.4 Emission Data Presentation

Amplitude versus frequency profiles of emission data shall be automatically generated and displayed at the time of test and shall be continuous. The displayed information shall account for all applicable correction factors (transducers, attenuators, cable loss, and the like) and shall include the applicable limit. Manually gathered data is not acceptable except for verification of the validity of the output. Plots of the displayed data shall provide a minimum frequency resolution of 1% or twice the measurement receiver bandwidth, whichever is less stringent, and minimum amplitude resolution of 1 dB. The above resolution requirements shall be maintained in the reported results of the EMITR.

Discussion: *Continuous displays of amplitude versus frequency are required. This information can be generated in a number of ways. The data can be plotted real-time as the receiver scans. The data can be stored in computer memory and later dumped to a plotter. Photographs of video displays are acceptable; however, it is generally more difficult to meet resolution requirements and to reproduce data in this form for submittal in an EMITR.*

Placement of limits can be done in several ways. Data may be displayed with respect to actual limit dimensions (such as dBμV/m) with transducer, attenuation, and cable loss corrections made to the data. An alternative is to plot the raw data in dBμv (or dBm) and convert the limit to equivalent dBμv (or dBm) dimensions using the correction factors. This second technique has the advantage of displaying the proper use of the correction factors. Since both the emission level and the required limit are known, a second party can verify proper placement. Since the actual level of the raw data is not available for the first case, this verification is not possible.

An example of adequate frequency and amplitude resolution is shown in ***Figure 501-12****. 1% frequency resolution means that two sinusoidal signals of the same amplitude separated by 1% of the tuned frequency are resolved in the output display so that they both can be seen. As shown in* ***Figure 501-12****, 1% of the measurement frequency of 5.1 MHz is 0.051 MHz and a second signal at 5.151 MHz (1 dB different in amplitude on the graph) is easily resolved in the display. The "2 times the measurement receiver bandwidth" criteria means, that two sinusoidal signals of the same amplitude separated by twice the measurement receiver bandwidth are resolved. For the example shown in* ***Figure 501-12****, the bandwidth is 0.01 MHz and 2 times this value is 0.02 MHz. Therefore, the 1% criterion is less stringent and is applicable. 1 dB amplitude resolution means that the amplitude of the displayed signal can be read within 1 dB. As shown in* ***Figure 501-12****, the reviewer can determine whether the signal amplitude is 60 dBμV or 61 dBμV.*

The difference between resolution and accuracy is sometimes confusing. ***Clause 4.3.1*** *requires a 3 dB measurement system accuracy for amplitude while,* ***Clause 4.3.10.3.4*** *requires 1 dB amplitude resolution. Accuracy is an indication how precisely a value needs to be known while resolution is an indication of the ability to discriminate between two values. A useful analogy is reading time from a watch. A watch typically indicates the time within one second (resolution) but may be 30 seconds different than the absolute correct time (accuracy).*

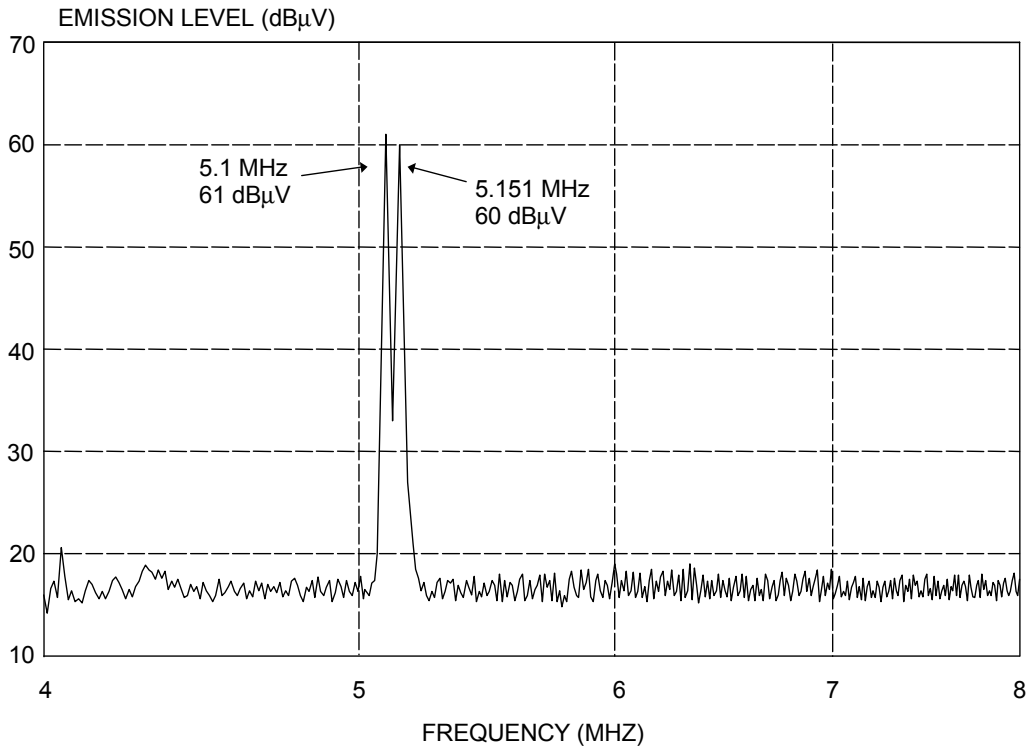

Figure 501-12 Example of Data Presentation Resolution

4.3.10.4 Susceptibility Testing

See also **Clause 4.4.2** in AECTP 500 for Susceptibility Criteria.

4.3.10.4.1 Frequency Scanning

For susceptibility measurements, the entire frequency range for each applicable test shall be scanned. For swept frequency susceptibility testing, frequency scan rates and frequency step sizes of signal sources shall not exceed the values listed in **Table 501-4**. The rates and step sizes are specified in terms of a multiplier of the tuned frequency (f_o) of the signal source. Analog scans refer to signal sources, which are continuously tuned. Stepped scans refer to signal sources, which are sequentially tuned to discrete frequencies. Stepped scans shall dwell at each tuned frequency for the greater of 3 seconds or EUT response time. Scan rates and step sizes shall be decreased when necessary to permit observation of a response.

For Safety Critical Systems there is a need to check for ‘window effects’

“Window Effects” is the name given to a susceptibility that has been observed during immunity testing of some systems which occurs at a certain test level but then apparently disappears at a higher level. An example of this is a system which utilizes a solid state switch and the upset is defined as inadvertent operation of the switch. As the level of applied RF is increased, a threshold level is reached where the controlling circuitry changes state, thus operating the switch. At higher levels, the controlling circuitry is saturated, thus no longer changing the state of the switch. If in this case the test level was just applied at the higher level then the susceptibility would not have been found. Safety critical and safety related equipment shall be reviewed for circuits having a safety function which may exhibit “window effects” to determine the necessity to conduct window effect tests. Where identified, the requirement to perform "window effects testing" shall be included within the relevant susceptibility test procedures of the EMITP.

The review shall address both CW and transient conditions. "Window effects" may be observed in equipment containing non-linear transient protection devices.

To check for "window effects" the signal source should be programmed to reduce its output by 20 dB at a minimum of 5 frequencies per decade, logarithmically spaced. At these frequencies, the output is then increased in 5 dB steps to the pass/fail level. If it is intended to sweep across the frequency band at the test level, to reduce test time it should be demonstrated that "window effects" are not applicable to the system under test.

Frequency Range	Analog Scans Maximum Scan Rates	Stepped Scans Maximum Step Size
30 Hz – 1 MHz	0.0333 f_o/sec	0.05 f_o
1 MHz – 30 MHz	0.00667 f_o/sec	0.01 f_o
30 MHz – 1 GHz	0.00333 f_o/sec	0.005 f_o
1 GHz – 40GHz	0.00167 f_o/sec	0.0025 f_o

Table 501-4 Susceptibility Scanning

Discussion: *For any susceptibility test performed in the frequency domain, the entire frequency range as specified in the applicable requirement must be scanned to ensure that all potentially susceptible frequencies are evaluated Care must be taken to ensure that the scanning type, analog or stepped, is correctly selected.*

Note: Most 'Sweep Generators' are actually digital synthesized generators and the "Stepped" scan rates must be used.

*The scan rates and step sizes in **Table 501-4** are structured to allow for a continuous change in value with frequency for flexibility. Computerised test systems could be programmed to change values very frequently. A more likely application is to block off selected bands for scanning and to base selections of scan rate or step size on the lowest frequency. Computerized test systems could be programmed to calculate the step size for each step. For example, if 1 - 2 GHz were selected, the maximum step at 1.5 GHz would be: 0.0025 x 1.5 GHz = 3.75 MHz. Both automatic and manual scanning are permitted.*

*The two primary areas of concern for frequency scanning for susceptibility testing are response times for EUTs to react to stimuli and how sharply the responses tune with frequency, normally expressed as quality factor (Q). Both of these items have been considered in the determination of the scan rates and step sizes in **Table 501-4**. The table entries are generally based on the assumption of a maximum EUT response time of three seconds and Q values of 10, 50, 100, 500, and 1000 (increasing values as frequency increases in **Table 501-4**). Since EUT responses are more likely to occur in approximately the 1 to 200 MHz range due to efficient cable coupling based on wavelength considerations, Q values have been increased somewhat to slow the scan and allow additional time for observation of EUT responses. More detailed discussions on these items follow.*

*The assumption of a maximum response time of three seconds is considered to be appropriate for a large percentage of possible cases. There are several considerations. While the electronics processing the interfering signal may respond quickly, the output display may take some time to react. Outputs that require mechanical motion such as metre movements or servo driven devices will generally take longer to show degradation effects than electronic displays such as video screens. Another concern is that some EUTs will only be in particularly susceptible states periodically. For example, sensors feeding information to a microprocessor are typically sampled at specific time intervals. It is important that the susceptibility stimuli be located at any critical frequencies when the sensor is sampled. The time intervals between steps and sweep rates in **Table 501-3** may need to be modified for EUTs with unusually long response times.*

*Some concern has been expressed on the susceptibility scan rates and the impact that they would have on the length of time required to conduct a susceptibility test. The criteria of **Table 501-4** allow the susceptibility scan rate to be adjusted continually as the frequency is increased; however, as a practical matter, the rate would most likely only be changed once every octave or decade. As an example, **Table 501-5** splits the frequency spectrum up into ranges corresponding to **Table 501-4** and frequency ranges of some of the requirements. Actual test times were measured in a laboratory allowing for settling time and levelling. The total test time to run NRS02 from 2 MHz to 18 GHz for a stepped scan is 168 minutes for one polarization. Similarly, an analog scan would result in a total test time of approximately 100 minutes. These times are based on continuously calculating the next frequency using the present tuned frequency and the allowed step size. It must be emphasised that the scan speeds should be slowed down if the EUT response time or Q are more critical than those used to establish the values in **Table 501-4.** Note that the sweep times in the **Table 501-5** should be used as programmed times for a scan. Maximum allowable step sizes must be used. If scanning techniques employing alternative calculations, such as using the step size at the beginning frequency of an octave for the entire octave, larger test times will result.*

*Q is expressed as $_{fo/}$BW where f_o is the tuned frequency and BW is the width in frequency of the response at the 3 dB down points. For example, if a response occurred at 1 MHz at a susceptibility level of 1 volt and the same response required 1.414 volts (3 dB higher in required drive) at 0.95 and 1.05 MHz, the Q would be 1 MHz/(1.05 - 0.95 MHz) or 10. Q is primarily influenced by resonances in filters, interconnecting cabling, physical structure and cavities. The assumed Q values are based on observations from various types of testing. The step sizes in **Table 501-3** are one half of the 3 dB bandwidths of the assumed value of Q ensuring that test frequencies will lie within the resonant responses.*

Frequency Range	Maximum Step Size	Actual Scan Time (minutes)
30 Hz – 150 kHz	0.05 f_o	16
150 kHz– 1 MHz	0.05 f_o	4
1 MHz – 2 MHz	0.01 f_o	5
2 MHz – 30 MHz	0.01 f_o	20
30 MHz – 1 GHz	0.005 f_o	54
1 GHz – 18 GHz	0.0025 f_o	94
18 GHz – 40 GHz	0.0025 f_o	28

Table 501-5 Susceptibility Testing Times

*Below approximately 200 MHz, the predominant contributors are cable and interface filter resonances. There is loading associated with these resonances, which dampens the responses and limits most values of Q to less than 50. Above 200 MHz, structural resonances of enclosures and housings start playing a role and have higher values of Q due to less dampening. Above approximately 1 GHz, aperture coupling with excitation of cavities will be become dominant. Values of Q are dependent on frequency and on the amount of material contained in the cavity. Larger values of Q result when there is less material in the volume. A densely packaged electronics enclosure will exhibit significantly lower values of Q than an enclosure with a higher percentage of empty volume. Q is proportional to Volume / (Surface Area X Skin Depth). The value of Q also tends to increase with frequency, as the associated wavelength becomes smaller. EUT designs with unusual configurations that result in high Q characteristics may require that the scan rates and step sizes in **Table 501-4** be, decreased for valid testing.*

RF processing equipment presents a special case requiring unique treatment. Intentionally tuned circuits for processing RF can have very high values of Q. For example, a circuit operating at 1 GHz with a bandwidth of 100 kHz has a Q of 1 GHz/100 kHz or 10,000.

Automatic levelling used to stabilise the amplitude of a test signal for stepped scans may require longer dwell times than one second at discrete frequencies. The signal will take time to settle and any EUT responses during the levelling process should be ignored.

4.3.10.4.2 Modulation of Susceptibility Signals

Susceptibility test signals for NCS07 and NRS02 shall be pulse modulated (on/off ratio of 40 dB minimum) at a 1 kHz rate with a 50% duty cycle.

Discussion: *Modulation is usually the effect that degrades EUT performance. The wavelengths of the RF signal cause efficient coupling to electrical cables and through apertures (at higher frequencies). Non-linearities in the circuit elements detect the modulation on the carrier. The circuits may then respond to the modulation depending upon detected levels, circuit bandpass characteristics, and processing features.*

Pulse modulation at a 1 kHz rate, 50% duty cycle, (alternately termed 1 kHz square wave modulation) is specified for several reasons. 1 kHz is within the bandpass of most analog circuits such as audio or video. The fast rise and fall times of the pulse causes the signal to have significant harmonic content high in frequency and can be detrimental to digital circuits. Response of electronics has been associated with energy present and a square wave results in high average power. The modulation encompasses many signal modulations encountered in actual use. The square wave is a severe form of amplitude modulation used in communications and broadcasting. It also is a high duty cycle form of pulse modulation representative of radars.

Care needs to be taken in implementing 1 kHz, 50% duty cycle, pulse modulation (on/off ratio of 40 dB) using some signal sources. Most, higher frequency signal sources have either internal pulse modulation or an external port for pulse modulation. This function switches the output on and off without affecting the amplitude of the unmodulated signal, provided that the strength of the modulation signal is adequate. For other signal sources, particularly at lower frequencies, the external amplitude modulation (AM) port needs to be driven to a minimum of 99 % depth of modulation (equivalent to 40 dB on/off ratio) to simulate pulse modulation. The output signal will essentially double in amplitude compared to an unmodulated signal for this type of input. Depending on the type of testing being performed and the technique of monitoring applied signals; this effect may or may not influence the results. Use of an AM port can be substantially more involved than using a pulse modulation port. The amplitude of the input signal directly influences the depth of modulation. There is a potential of exceeding 100% depth of modulation, which will result in signal distortion. Since the on/off ratio requirement is stringent, it is necessary to view the output signal on an oscilloscope to set the appropriate depth of modulation. Another complication is that the bandwidth of AM ports is usually less than pulse ports. Driving the port with a pulse shape may result in difficulty in setting the source for a minimum of 99%.

Worst-case modulation may not be related to modulations seen in actual use or may be very, specialised. The most typical modulations used below approximately 400 MHz have been amplitude modulation at either 400 or 1000 Hz (30 to 80%) or pulse modulation, 50% duty cycle, at 400 or 1000 Hz. These same modulations have been used above 400 MHz together with pulse modulation at various pulse widths and pulse repetition frequencies. Continuous wave (CW - no modulation) has also occasionally been used. CW typically produces a detected DC level in the circuitry and affects certain types of circuits. In general, experience has shown that modulation is more likely to cause degradation. CW should be included as an additional requirement when assessing circuits that respond only to heat such as electro explosive devices. CW should not normally be used as the only condition.

Consideration should be given to applying a secondary 1 Hz modulation (where the normal 1 kHz square wave modulated waveform is completely turned on and off every 500 milliseconds) for certain subsystems with low frequency response characteristics, such as aircraft flight control subsystems. This modulation simulates characteristics of some transmitters such as HF radios in single sideband

operation (no carrier), where a transmitted voice signal, will cause the RF to be present only when a word is spoken. The dilemma with using this modulation is that the potential response of some subsystems may be enhanced, while others may be less responsive. In the latter case, the 500 millisecond off period allows the subsystem to recover from effects introduced during the "on" period.

4.3.10.4.3 Thresholds of Susceptibility

Susceptibilities and anomalies that are not in conformance with contractual requirements are not acceptable. However, all susceptibilities and anomalies observed during conduct of the test need to be documented. When susceptibility indications are noted in EUT operation, a threshold level shall be determined where the susceptible condition is no longer present. Thresholds of susceptibility shall be determined as follows and described in the EMITR:

a. When a susceptibility condition is detected, reduce the interference signal until the EUT recovers.

b. Reduce the interference signal by an additional 6 dB.

c. Gradually increase the interference signal until the susceptibility condition reoccurs. The resulting level is the threshold of susceptibility.

d. Record this level, frequency range of occurrence, frequency and level of greatest susceptibility, and other test parameters, as applicable.

Discussion: *It is usually necessary to test at levels above the limits to ensure that the test signal is at least at the required level. Determination of a threshold of susceptibility is necessary when degradation or anomalies is present to assess whether requirements are met. This information should be included in the EMITR. Threshold levels below limits are unacceptable.*

The specified steps to determine thresholds of susceptibility standardise a particular technique. An alternative procedure sometimes utilised in the past was to use the value of the applied signal where the EUT recovers (step a above) as the threshold. Hysteresis type effects are often present where different values are obtained for the two procedures.

Distortion of sinusoidal susceptibility signals caused by non-linear effects in power amplifiers can lead to erroneous interpretation of results. When distortion is present, the EUT may actually respond to a harmonic of the intended susceptibility frequency, where the required limit may be lower. When frequency selective receivers are used to monitor the injected level, distortion itself does not prevent a valid susceptibility signal level from being verified at the intended frequency. However, harmonic levels should be checked when susceptibility is present to determine if they are influencing the results. When broadband sensors are being used such as in portions of NRS02, distortion can result in the sensor incorrectly displaying the required signal level at the intended frequency. In this case, distortion needs to be controlled such that correct levels are measured.

4.3.10.4.4 Susceptibility of EUT Input Power Filters

Conducted emission test NCE01 or NCE05 must be performed prior to performing transient tests NCS10 and NCS11 to obtain a baseline measurement. On completion of transient tests NCS10 and NCS11 conducted emission test NCE01 or NCE05 shall be repeated. This is to confirm no damaged has been sustained by the EUT power line filters.

Discussion: *Comparison of emission profiles before and after transient testing shall be performed. This shall determine whether any damage to the EUT occurred during application of the transients, i.e. Filtering or other component damage. Should any significant changes in emission profile be evident then a FAIL result shall be recorded for this test even if the emission profile has been reduced due to the application of the transient.*

The conducted emission assessment is not intended to show compliance against the NCE01 or NCE05 limits but is used solely to compare the 'before' and 'after' emission profiles.

If test NCE01 or NCE05 has been performed as part of the trial prior to the transient tests then these results are acceptable to use as a baseline.

4.3.11 Calibration of Measuring Equipment

Test equipment and accessories required for measurement in accordance with this standard shall be calibrated in accordance with National Standards (e.g. ANSI/NCSL Z540-1 Ref [13] or ISO 10012-1 Ref [14] etc). In particular, measurement antennas, current probes, field sensors, and other devices used in the measurement loop shall be calibrated at least every 2 years unless otherwise specified by the procuring activity, or when damage is apparent.

Discussion: *Calibration is typically required for any measurement device whose characteristics are not verified through use of another calibrated item during testing. For example, it is not possible during testing to determine whether an antenna used to measure radiated emissions is exhibiting correct gain characteristics. Therefore, these antennas require periodic calibration. Conversely, a power amplifier used during radiated susceptibility testing often will not require gain calibration since application of the proper signal level is verified through the use of a separate calibrated field sensing device. However, for this type of equipment what it should be measured and limited is the harmonic content due to normally the field sensing devices used for field calibrations are broadband equipment. This parameter should be maintained below -15 dBc. In such applications in which that figure cannot be achieved, care must be taken to ensure that the E-field sensor is indicating the field from the fundamental and not form the harmonics.*

4.3.11.1 Measurement System Test

At the start of each emission test, the complete test system (including measurement receivers, cables, attenuators, couplers, and so forth) shall be verified by injecting a known signal, as stated in the individual test procedure, while monitoring system output for the proper indication. When the emission test involves an uninterrupted set of repeated measurements (such as evaluating different operating modes of the EUT) using the same measurement equipment, the measurement system test needs to be accomplished only one time.

Discussion: *The end-to-end system check prior to emission testing is valuable in demonstrating that the overall measurement system is working properly. It evaluates many factors including proper implementation of transducer factors and cable attenuation, general condition and setting of the measurement receiver, damaged RF cables or attenuators, and proper operation of software. Details on implementation are included in the individual test procedures.*

4.3.11.2 Antenna Factors

Factors for test antennas shall be determined in accordance with SAE ARP-958 Ref [15] or other acceptable test methods.

Discussion: *Ref [15] provides a standard basis for determining antenna factors emission testing. A caution needs to be observed in trying to apply these factors in applications other than EMI testing. The two antenna technique for antennas such as the biconical and double ridge horns is based on far field assumptions, which are not met over much of the frequency range. Although the factors produce standardised results, the true value of the electric field is not necessarily being provided through the use of the factor. Different measuring sensors need to be used when the true electric field must be known.*

5 APPLICABILITY REQUIREMENTS

5.1 General

This clause specifies details the test applicability requirements. **Table 501-6** is a list of the specific requirements established by this standard identified by requirement number and title and also where the test originated from. Specific test procedures are implemented by approved EMITP as detailed in

Clause 6. All results of tests performed to demonstrate compliance with the requirements are to be documented in the EMITR and forwarded to the Command or agency concerned for evaluation prior to acceptance of the equipment or subsystem. Design procedures and techniques for the control of EMI shall be described in the Electromagnetic Interference Control Plan (EMICP). Approval of design procedures and techniques described in the EMICP does not relieve the supplier of the responsibility of meeting the contractual emission, susceptibility, and design requirements.

Discussion: *The applicability of individual requirements in* ***Table 501-6*** *for a particular equipment or subsystem is dependent upon the platforms where the item will be used. The electromagnetic environments present on a platform together with potential degradation modes of electronic equipment items play a major role regarding which requirements are critical to an application. For example, emissions requirements are tied to protecting antenna-connected receivers on platforms. The operating frequency ranges and sensitivities of the particular receivers on-board a platform therefore, influence the need for certain requirements.*

The EMICP, EMITP, and EMITR are important elements in documenting design efforts for meeting the requirements of this category of the standard, testing approaches, which interpret the generalised test procedures in this standard, and reporting of the results of testing. The EMICP is a mechanism instituted to help ensure that contractors analyse equipment design for EMI implications and include necessary measures in the design for compliance with requirements. Approval of the document does not indicate that the procuring activity agrees that all the necessary effort is stated in the document. It is simply recognition that the design effort is addressing the correct issues.

The susceptibility limits are the upper bound on the range of values for which compliance is required. The EUT must also provide required performance at any stress level below the limit. For example, if the limit for radiated susceptibility to electric fields is 10 V/m, the EUT must also meet its performance requirements at 5 V/m or any other field less than or equal to 10 V/m. There have been cases documented where equipment (such as equipment with automatic gain control circuitry) was not susceptible to radiated electric fields at given frequencies at the limit level but was susceptible to the environment at the same frequencies when exposed to fields below the limit level.

5.2 EMI Control Requirements versus Intended Installations

Table 501-7 shows the applicability of the test methods to each of the Land, Sea and Air service environments and should be read in conjunction with the more detailed discussion of applicability of each individual test method listed in **Clause 4**. In addition there are differences between Nations on where/whether a particular test should be applied.

Where an equipment or subsystem is to be installed in more than one type of platform or installation, it shall comply with the most stringent of the applicable requirements and limits. Also where procurement is for more than one nation the requirements of each nation shall be addressed.

Discussion: *Discussion on each requirement as it relates to different platforms is contained in C****lause 4****. These discussions explain where each test may be specifically required according to the type of platform/service or the types of sensor system fitted.*

Requirement	Description	Test derived from
NCE01	Conducted Emissions, Power Leads, 30 Hz to 10 kHz	Mil Std 461F
NCE02	Conducted Emissions, Power Leads, 10 kHz to 10 MHz	Mil Std 461F
NCE03	Conducted Emissions, Antenna Terminal, 10 kHz to 40 GHz	Mil Std 461F
NCE04	Conducted Emissions, Exported Transients on Power Leads	Def Stan 59-411
NCE05	Conducted Emissions, Power, Control & Signal Leads, 30 Hz to 150 MHz	Def Stan 59-411
NCS01	Conducted Susceptibility, Power Leads, 30 Hz to 150 kHz	Mil Std 461F
NCS02	Conducted Susceptibility, Control & Signal Leads, 20 Hz to 50 kHz	Def Stan 59-411
NCS03	Conducted Susceptibility, Antenna Port, Intermodulation, 15 kHz to 10 GHz	Mil Std 461F
NCS04	Conducted Susceptibility, Antenna Port, Rejection of Undesired Signals, 30 Hz to 20 GHz	Mil Std 461F
NCS05	Conducted Susceptibility, Antenna Port, Cross Modulation, 30 Hz to 20 GHz	Mil Std 461F
NCS06	Conducted Susceptibility, Structure Current, 60 Hz to 100 kHz	Mil Std 461F
NCS07	Conducted Susceptibility, Bulk Cable Injection, 10 kHz to 200 MHz	Mil Std 461F
NCS08	Conducted Susceptibility, Bulk Cable Injection, Impulse Excitation	Mil Std 461F
NCS09	Conducted Susceptibility, Damped Sinusoidal Transients, Cables and Power Leads, 10 kHz to 100 MHz	Mil Std 461F
NCS10	Conducted Susceptibility, Imported Lightning Transient (Aircraft/Weapons)	Def Stan 59-411
NCS11	Conducted Susceptibility, Imported Low Frequency on Power Leads (Ships)	Def Stan 59-411
NCS12	Conducted Susceptibility, Electrostatic Discharge	Def Stan 59-411
NCS13	Conducted Susceptibility, Transient Power Leads	Mil Std 461F
NRE01	Radiated Emissions, Magnetic Field, 30 Hz to 100 kHz	Mil Std 461F
NRE02	Radiated Emissions, Electric Field, 10 kHz to 18 GHz	Mil Std 461F
NRE03	Radiated Emissions, Antenna Spurious and Harmonic Outputs, 10 kHz to 40 GHz	Mil Std 461F
NRS01	Radiated Susceptibility, Magnetic Field, 30 Hz to 100 kHz	Mil Std 461F
NRS02	Radiated Susceptibility, Electric Field, 50 kHz to 40 GHz	Mil Std 461F / Def Stan 59-411
NRS03	Radiated Susceptibility, Transient Electromagnetic Field	Mil Std 461F
NRS04	Radiated Susceptibility, Magnetic Field, (DC)	Def Stan 59-411

Table 501-6 Emission and Susceptibility Requirements

Equipment and Subsystems installed in, on, or launched from the following Platforms	Requirement Applicability																								
	NCE01	NCE02	NCE03	NCE04	NCE05	NCS01	NCS02	NCS03	NCS04	NCS05	NCS06	NCS07	NCS08	NCS09	NCS10	NCS11	NCS12	NCS13	NRE01	NRE02	NRE03	NRS01	NRS02	NRS03	NRS04
Land	**-**	**Y**	**P**	**Y**	**Y**	**Y**	**Y**	**P**	**P**	**P**	**-**	**Y**	**Y**	**Y**	**-**	**-**	**Y**	**-**	**Y**	**Y**	**P**	**Y**	**Y**	**P**	**-**
Ships	**P**	**Y**	**P**	**Y**	**Y**	**Y**	**Y**	**P**	**P**	**P**	**-**	**Y**	**P**	**Y**	**-**	**Y**	**P**	**-**	**Y**	**Y**	**P**	**Y**	**Y**	**P**	**Y**
Submarines	**Y**	**Y**	**P**	**Y**	**Y**	**Y**	**Y**	**P**	**P**	**P**	**P**	**Y**	**P**	**Y**	**-**	**Y**	**P**	**Y**	**Y**	**Y**	**P**	**Y**	**Y**	**P**	**Y**
Air	**Y**	**Y**	**P**	**Y**	**Y**	**Y**	**Y**	**P**	**P**	**P**	**-**	**Y**	**Y**	**Y**	**Y**	**-**	**Y**	**-**	**Y**	**Y**	**P**	**Y**	**Y**	**P**	**-**
Space Systems, Including Launch Vehicles	-	**Y**	**P**	-	-	**Y**		**P**	**P**	**P**	-	**Y**	**Y**	**Y**	-	-	-	-	-	**Y**	**P**	-	**Y**	-	-

Table 501-7 Requirement Matrix

Key: Y Test is required for all equipment on this platform type.

P Test is partially applicable. Selection of the test should be based on knowledge of the installation and other co-located equipment's based on guidance for each test method given in **Clause 6**. These tests may also be specified / selected by the procurement authority.

No entry in the table means the test is not applicable to equipment on/in that service/platform.

Notes:

1. Where NCE05 Test is performed, it is not necessary to also undertake NCE01 or NCE02 tests.
2. NRS04 is only applicable where equipment/subsystem is installed on a platform fitted with a degaussing system or which may be subject to deperming.

Definitions:

1. Land covers military applications that are primarily land based. It includes all military vehicles including armoured and transport vehicles that will be used in or close to front line systems. In addition it includes equipment in ground facilities, which are operated in proximity or directly connected to sensitive receiving equipment or weapon systems. Where such facilities are largely in a commercial setting or only a limited use of military equipment is required the procuring authority shall specify which of these tests or other commercial tests are required.
2. Aircraft operated by all 3 services should be treated in the same manner. However, as explained in the discussion on individual test methods in **Clause 4**, some tests may not be required if sensors of a particular type are not installed.
3. Ship / Submarine application include all EUTs fitted on metallic and non-metallic military platforms which operate in open and littoral waters.

6 DETAILED TEST METHODS REQUIREMENTS

6.1 General

This clause specifies detailed emissions and susceptibility requirements and the associated test procedures. General test procedures are included in the following sub-clauses.

6.2 Units of Frequency Domain Measurements

All frequency domain limits are expressed in terms of equivalent Root Mean Square (RMS) value of a sine wave as would be indicated by the output of a measurement receiver using peak envelope detection (see **Clause 4.3.10.1**).

Discussion: A detailed discussion is provided on peak envelope detection in **Clause 4.3.10.1**. A summary of output of the detector for several input waveforms is as follows. For an unmodulated sine wave, the output simply corresponds to the RMS value of the sine wave. For a modulated sine wave, the output is the RMS value of an unmodulated sine wave with the same absolute peak value. For a signal with a bandwidth greater than the bandwidth of the measurement receiver, the output is the RMS value of an unmodulated sine wave with the same absolute peak value as the waveform developed in the receiver bandpass.

6.3 Emission and Susceptibility Requirements, Limits, and Test Procedures

Individual emission or susceptibility requirements and their associated limits and test procedures are grouped together in the following sub clauses. The applicable frequency range and limit of many emission and susceptibility requirements varies depending on the particular platform or installation. The test procedures included in this section are valid for the entire frequency range specified in the procedure; however, testing only needs to be performed over the frequency range specified for the particular platform or installation.

Discussion: In the test methods of this category, the test procedures for individual requirements follow directly after the applicability and limit statements. The discussion for the individual requirements is separated into these two areas.

6.4 NCE01, Conducted Emissions, Power Leads, 30 Hz to 10 kHz

Applicability and Limits: The requirements are applicable to leads that obtain power from sources that are not part of the EUT. There is no requirement on output leads from power sources.

This test need not be performed if test method NCE05 is being performed. See **Clause 4.2** in conjunction with Applicability **Table 501-7**.

The limits are in terms of current because of the difficulty in controlling the power source impedance in test facilities at lower frequencies. This type of control would be necessary to specify the limits in terms of voltage. Emission current levels will be somewhat independent of power source impedance variations as long as the impedance of the emission source is large relative to the power source impedance.

For surface ships and submarines, the intent of this requirement is to control the effects of conducted emissions peculiar to the shipboard power distribution system. Harmonic line currents are limited for each electrical load connected to the power distribution system.

The surface ship and submarine power distribution system (ship's primary power) supplied by the ship's alternators is 440 VAC, 60 Hz, 3-phase, 3-wire, ungrounded. Although ship's primary power is ungrounded, there exists a virtual alternating current (AC) ground at each electrical load due to capacitance to chassis. The unbalance between the virtual grounds at each electrical load causes AC currents to flow in the hull of the submarine. These hull currents can degrade the performance of electronic equipment, upset ground detectors, and counteract degaussing.

Hull currents are controlled by limiting the amplitude of harmonic currents conducted on the power distribution system wiring for each electrical load. The limit is based on maintaining total harmonic voltage distortion of the ship power distribution system within 5% of the supply voltage with the contribution from any single harmonic being less than 3%. In addition to the hull current concern, total harmonic distortion of the supply voltage waveform greater than 5% is above the tolerance of most electronic equipment, induction motors, magnetic devices, and measuring devices.

For air the primary concern is to ensure that the EUT does not corrupt the power quality (allowable voltage distortion) on the power buses present on the platform. In the case of aircraft using anti-submarine warfare (ASW) equipment it is the unacceptable levels of emission currents in the frequency range of this test that would limit the detection and processing capabilities of the Magnetic Anomaly Detection (MAD) and Acoustic Sensor systems.

The MAD systems must be able to isolate a magnetic disturbance in the earth's magnetic field of less than one part in 50,000. In present aircraft, the full sensitivity of the MAD systems is not available due to interference produced by onboard equipment. Low frequency interference effects in the 30 Hz to 10 kHz can be a problem for Acoustic Sensor systems.

Possible tailoring of the requirements by the procuring activity is to impose the requirement if sensitive receivers operating in the frequency range of the requirement are to be installed on a platform or to modify the limit based on the particular characteristics of the power system onboard the platform.

Test Procedures: Emission levels are determined by measuring the current present on each power lead. The LISNs will have little influence on the results of this testing. The circuit characteristics of the LISN will help stabilise measurements near 10 kHz; however, the LISN parameters will not be significant over most of the frequency range of the test.

Current is measured because of the low impedances present over most of the frequency range of the test. Current levels will be somewhat independent of power source impedance variations as long as the impedance of the emission source is significant in relation to the power source impedance. However, at frequencies where the shielded room filters in the test facility resonate (generally between 1 and 10 kHz), influences on measured currents can be expected.

During the measurement system check, the signal generator may need to be supplemented with a power amplifier to obtain the necessary current 6 dB below the applicable limit.

The value of the resistor “R” in **Figure NCE01-5** is not specified because a particular value is not critical. Whatever value is convenient for measurement and possible matching of the signal generator can be used.

A possible alternative measurement tool in this frequency range is a wave analyser using a Fast Fourier Transform algorithm. Use of this type of instrumentation requires specific approval by the procuring activity.

6.5 NCE02, Conducted Emissions, Power Leads, 10 kHz to 10 MHz

Applicability and Limits: The requirements are applicable to leads that obtain power from sources that are not part of the EUT. There is no requirement on output leads from power sources.

The basic concept in the lower frequency portion of the requirement is to ensure that the EUT does not corrupt the power quality (allowable voltage distortion) on the power buses present on the platform.

Since power quality standards govern allowable distortion on output power, there is no need for separate EMI requirements on output leads. The output power leads are treated no differently than any other electrical interface. This category of the standard does not directly control the spectral content of signals present on electrical interfaces. Waveform definitions and distortion limits are specified in documents such as interface control documents. In the case of output power, the quality of the power must be specified over an appropriate frequency range so that the user of the power can properly design for its characteristics. This situation is true whether the power source is a primary source such as 115 V, 400 Hz, or a + 15 V DC low current supply. A significant indirect control on spectral content exists in the NRE02 limits which essentially require that appropriate waveform control and signal

transmission techniques be used to prevent unacceptable radiation (see discussion on NCE02 limit placement and NRE02 relationship below).

Since voltage distortion is the basis for establishing power quality requirements, the NCE02 limit is in terms of voltage. The use of a, standardised line impedance over the frequency range of this test provides for the convenient measurement of the voltage as developed across this impedance.

At higher frequencies, the NCE02 limit serves as a separate control from NRE02 on potential radiation from power leads that may couple into sensitive antenna-connected receivers. The NCE02 limits have been placed to ensure that there is no conflict with the NRE02 limit. Emissions at the NCE02 limit should not radiate above the NRE02 limit. Laboratory experiments on coupling from a 2.5 metre power lead connected to a line impedance stabilisation network have shown that the electric field detected by the NRE02 rod antenna is flat with frequency up to approximately 10 MHz and is approximately equal to (x-40) dBμV/m, where "x" is the voltage expressed in dBμV. For example, if there is a signal level of 60 dBμV on the lead, the detected electric field level is approximately, 20 dBμV/m.

Tailoring of the requirements in contractual documents may be desirable by the procuring activity. Adjusting the limit line to more closely emulate a spectral curve for a particular power quality standard is one possibility. Contributions from multiple interference sources need to be considered as noted above. If antenna-connected receivers are not present on the platform at the higher frequencies, tailoring of the upper frequency of the requirement is another possibility. The requirement is limited to an upper frequency of 10 MHz due to the allowable 2.5 metre length of power lead in the test set-up approaching resonance. Any conducted measurements become less meaningful above this frequency. If tailoring is done to impose the requirement at higher frequencies, the test set-up should be modified for NCE02 to shorten the allowable length of the power leads.

Test Procedures: Emission levels are determined by measuring the voltage present at the output port on the 50 μH LISN.

The power source impedance control provided by the LISN is a critical element of this test. This control is imposed due to wide variances in characteristics of shielded room filters and power line impedances among various test agencies and to provide repeatability through standardisation. The LISN standardises this impedance. The impedance present at the EUT electrical interface is influenced by the circuit characteristics of the power lead wires to the LISNs. The predominant characteristic is inductance. The impedance starts to deviate noticeably at approximately 1 MHz where the lead inductance is about 13 Ω.

A correction factor must be included in the data reduction to account for the 20 dB attenuator and for voltage drops across the coupling capacitor. This capacitor is in series with a parallel combination of the 50 Ω measurement receiver and the 1 kΩ resistor in the 50 μH LISN. The two parallel resistances are equivalent to 47.6 Ω. The correction factor equals:

$$20 \log_{10} (1 + 5.60\text{x}10^{-9}f^2)^{1/2} / (7.48\text{x}10^{-5}f)$$

Where f is the frequency of interest expressed in Hz. This equation is plotted in **Figure 501-13**. The correction factor is 4.45 dB at 10 kHz and drops rapidly with frequency.

The upper measurement frequency is limited to 10 MHz because of resonance conditions with respect to the length of the power leads between the EUT and 50 μH LISN. As noted in **Clause 4.3.8.6.2**, these leads are between 2.0 and 2.5 metres long. Laboratory experimentation and theory show a quarter-wave resonance close to 25 MHz for a 2.5 metre lead. In the laboratory experiment, the impedance of the power lead starts to rise significantly at 10 MHz and peaks at several thousand Ω at approximately 25 MHz. Voltage measurements at the 50 μH LISN become largely irrelevant above 10 MHz.

The 0.25 μF coupling capacitor in the 50 μH LISN allows approximately 3.6 volts to be developed across the 50 Ω termination on the signal port for 115 volt, 400 Hz, power sources. The 20 dB attenuator is specified in the test procedure to protect the measurement receiver and to prevent overload. Sources of 60 Hz pose less of a concern.

An oscilloscope is necessary for the measurement system check in **Figure NCE02-1** to ensure that the actual applied voltage is measured accurately at 10 kHz and 100 kHz and maintains a sinusoidal shape. The 50 µH LISN presents a 50 Ω load impedance to a 50 Ω signal generator only for frequencies of approximately 300 kHz or higher (see **Figures 501-9** and **501-10**). Since a 50 Ω signal generator is essentially an ideal voltage source in series with 50 Ω, the amplitude display setting of the generator is correct only when it is terminated in a matched impedance of 50 Ω. Under this condition the voltage splits between the two 50 Ω resistances. If the output is measured directly with a high impedance instrument, such as an oscilloscope, the indicated voltage is twice the amplitude setting. The load seen by the signal generator varies with frequency and the voltage at the 50 µH LISN will also vary.

An area of concern for this test procedure is the potential to overload the measurement receiver due to the line voltage at the power frequency. Overload precautions are discussed in **Clause 4.3.7.3**. When an overload condition is predicted or encountered, a rejection filter can be used to attenuate the power frequency. A correction factor must be then included in the emission data to account for the filter loss with respect to frequency.

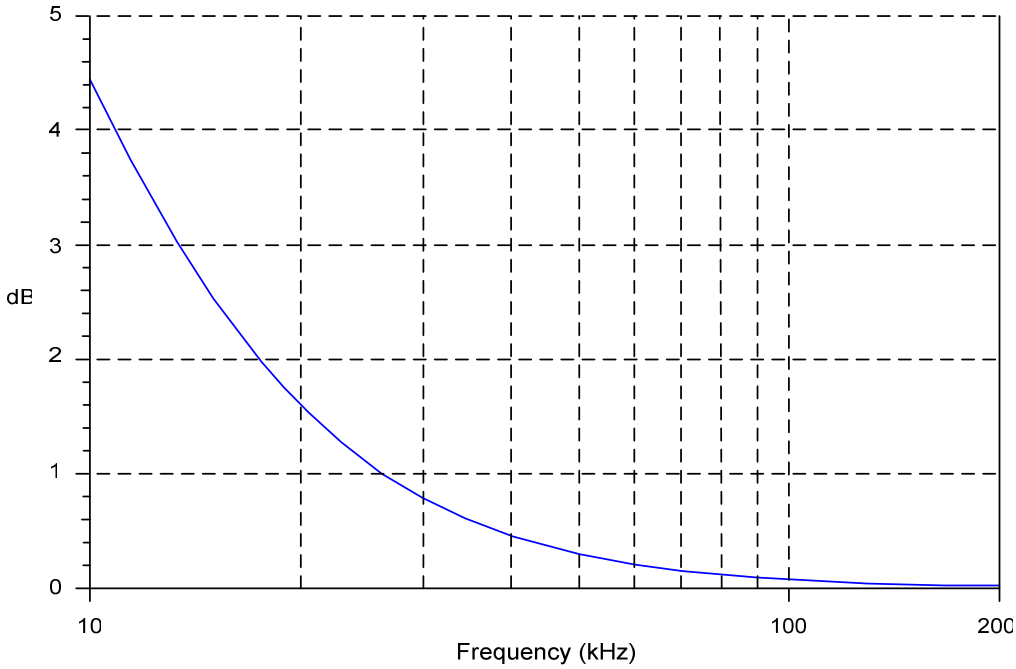

Figure 501-13 Correction Factor for 50 µH LISN Coupling Capacitor

6.6 NCE03, Conducted Emissions, Antenna Terminal, 10 kHz to 40 GHz

Applicability and Limits: The requirement is applicable for transmitters, receivers and amplifiers. The basic concern is to protect antenna-connected receivers both on and off the platform from being degraded due to radiated interference from the antenna associated with the EUT. The limit for transmitters in the transmit mode is placed primarily at levels which are considered to be reasonably obtainable for most types of equipment. Suppression levels that are required to eliminate all potential electromagnetic compatibility situations are often much more severe and could result in significant design penalties. The limit for receivers and transmitters in standby is placed at a level that provides reasonable assurance of compatibility with other equipment. Common requirements are specified for all applications since the concerns are the same for all platforms.

As an example of an antenna coupling situation, consider a 10 watt VHF-AM transmitter operating at 150 MHz and a UHF-AM receiver with a sensitivity of -100 dBm tuned to 300 MHz with isotropic antennas located 10 metres apart. The requirement is that the transmitter second harmonic at 300 MHz must be down 50 + 10 log 10 = 60 dB.

The free space loss equation

$$P_R/P_T = (\lambda^2 G_T G_R)/(4\pi R)^2$$

indicates an isolation of 42 dB between the two antennas for the following conditions:

P_R	=	Received Power		G_R	=	Receive Antenna Gain	=	1
P_T	=	Transmitted Power		G_T	=	Transmitter Antenna Gain	=	1
λ	=	Wavelength	= 1 metre	R	=	Distance between Antennas	=	10 metres

A second harmonic at the limit would be 60 + 42 = 102 dB down at the receiver. 102 dB below 10 Watts (40 dBm) is -62 dBm, which is still 38 dB above the receiver sensitivity. The level that is actually required not to cause any degradation in the receiver is -123 dBm. This value results because the worst-case situation occurs when the interfering signal is competing with the sidebands of the intentional signal with a, signal amplitude at the receiver sensitivity. For a standard tone of 30% AM used to verify sensitivity, the sidebands are 13 dB down from the carrier and a 10 dB signal-to-noise ratio is normally specified. To avoid problems, the interfering signal must, therefore, be 13 + 10 = 23 dB below -100 dBm or -123 dBm. This criterion would require the second harmonic to be 121 dB down from the transmitter carrier that could be a difficult task. Harmonic relationships can sometimes be addressed through frequency management actions to avoid problems.

Assessing the 34 dBμV (-73 dBm) requirement for standby, the level at the receiver would be 115 dBm, which could cause some minimal degradation in the presence of a marginal intentional signal.

Greater antenna separation or antenna placement not involving direct line of sight would improve the situation. Also, the VHF antenna may be poorer than isotropic in the UHF band. NCE03 does not take into account any suppression associated with frequency response characteristics of antennas; however, the results of the case cited are not unusual. NRE03, which is a radiated emission control on spurious and harmonic outputs, includes assessment of antenna characteristics.

Since the free space loss equation indicates that isolation is proportional to the wavelength squared, isolation values improve rapidly as frequency increases. Also, antennas are generally more directional in the GHz region and receivers tend to be less sensitive due to larger bandwidths.

The procuring activity may consider tailoring contractual documents by establishing suppression levels based on antenna-to-antenna coupling studies on the particular platform where the equipment will be used. Another area could be relaxation of requirements for high power transmitters. The standard suppression levels may result in significant design penalties. For example, filtering for a 10,000 W HF transmitter may be excessively heavy and substantially attenuate the fundamental frequency. Engineering trade-offs may be necessary.

Test Procedures: Since the test procedures measure emissions present on a controlled impedance, shielded, transmission line, the measurement results should be largely independent of the test set-up configuration. Therefore, it is not necessary to maintain the basic test set-up described in the main body of this category of the standard.

The NCE03 procedure uses a direct coupled technique and does not consider the effect that the antenna system characteristics will have on actual radiated levels.

The selection of modulation for transmitters and frequency, input power levels, and modulation for amplifiers can influence the results. The procedure requires that parameters that produce the worst-case emission spectrum be used. The most complicated modulation will typically produce the worst-case spectrum. The highest allowable drive level for amplifiers usually produces the worst harmonics and spurious outputs. However, some amplifiers with automatic gain controls may produce higher distortion with drive signals set to the lowest allowable input due to the amplifier producing the highest

gain levels. The details of the analysis on the selection of test parameters shall be included in the EMITP.

Figure NCE03-3 is used for receivers and transmitters in the stand-by mode. The purpose of the attenuator pad in **Figure NCE03-3** is to establish a low VSWR for more accurate measurements. Its nominal value is 10 dB, but it can be smaller, if necessary, to maintain measurement sensitivity.

The set-up in **Figure NCE03-1** is used for low power transmitters in which the highest intentionally generated frequency does not exceed 40 GHz. The attenuator pad should be approximately 20 dB or large enough to reduce the output level of the transmitter sufficiently so that it does not damage or overload the measurement receiver. The rejection network in the figure is tuned to the fundamental frequency of the EUT and is intended to reduce the transmitter power to a level that will not desensitize or induce spurious responses in the measurement receiver. Both the rejection network and RF pad losses must be adjusted to maintain adequate measurement system sensitivity. The total power reaching the measurement receiver input should not exceed the maximum allowable level specified by the manufacturer. All rejection and filter networks must be calibrated over the frequency range of measurement.

The set-up of **Figure NCE03-2** is for transmitters with high average power. For transmitters with an integral antenna, it is usually necessary to measure the spurious emissions by the radiated procedures of NRE03.

Some caution needs to be exercised in applying **Table 501-2**. For spurious and harmonic emissions of equipment in the transmit mode, it is generally desirable for the measurement receiver bandwidth to be sufficiently large to include at least 90% of the power of the signal present at a tuned frequency. This condition is required if a comparison is being made to a power requirement in a specification. Spurious and harmonic outputs generally have the same modulation characteristics as the fundamental. Since this procedure measures relative levels of spurious and harmonic signal with respect to the fundamental, it is not necessary for the measurement receiver to meet the above receiver bandwidth to signal bandwidth criterion. However, if the measurement receiver bandwidth does not meet the criterion and spurious and harmonic outputs are located in frequency ranges where this standard specifies a bandwidth different than that used for the fundamental. Then the measurement receiver bandwidth should be changed to that used at the fundamental to obtain a proper measurement.

For EUTs having waveguide transmission lines, the measurement receiver needs to be coupled to the waveguide by a waveguide to coaxial transition. Since the waveguide acts as a high-pass filter, measurements are not necessary at frequencies less than 0.8 f_{co}, where f_{co} is the waveguide cut-off frequency.

6.7 NCE04, Conducted Emissions, Exported Transients on Power Leads

Applicability and Limits: Where specified by the procuring authority NCE04 shall be performed on AC & DC primary power cables, which interface with the platform power supply.

Contactor switching transients are generated by switching the EUT on and off using an external supply contactor of the type to be used in its final installation. If the contactor type is not known or unavailable, then an alternative of suitable type and current rating may be used.

Functional switching transients are generated by switching the EUT on and off using the power switch on the EUT, if fitted. Additionally, functional switching transients may be generated by operation of the EUT, i.e. while operating the EUT over its normal operating sequence and exercising the EUT through its full range of functions.

Test Procedures: The purpose of this test is to measure the amplitude and duration of transients appearing on primary power lines caused by the normal operation of the EUT and also as a result of switching on and off the power supply to the EUT. These transient emissions may couple via conduction and radiation from the power lines to other potentially susceptible equipment in the actual installation.

For AC supplies, a twin 'T' notch filter may be used to filter the power supply frequency. With the power frequency filtered, any transients shown on the oscilloscope are relative to the AC waveform when measured between the transient peak and the oscilloscope's reference level.

The accurate measurement of transient amplitude in conducting this test may sometimes be prejudiced by the high amplitude response at the power supply frequency. The following describes the design of a twin-T filter, tuned to the supply frequency, which is connected at the oscilloscope input, in tandem with a voltage probe, which attenuates the power supply frequency response by at least 30 dB.

Figure 501-14 shows a typical x10 voltage probe connected via a twin-T filter to an oscilloscope. For simplicity, the additional components necessary to ensure broad-band performance are not shown. Typical component values for the probe and oscilloscope are Z_I = 9 MΩ and Z_0 = 1 MΩ, giving a x10 attenuation. For probes with both series and shunt resistances Z_1 should be calculated as the output impedance of the probe.

Given the impedances of the probe and oscilloscope combination to be used, the component values of the twin-T network may now be calculated for the chosen power frequency f_0. To ensure symmetry of the twin-T response at frequencies, well above and below f_0.

$$\text{Let} \quad R = \sqrt{(2Z_1Z_0)} \ \text{ and } \ 2R = 2\sqrt{(2Z_1Z_0)}$$

To locate the notch frequency at f_0 let $\omega_0 = 2\pi f_0$ then $C = 1/R\omega_0$ and $2C = 2/R\omega_0$

The use of 1% tolerance components, in series and parallel combinations to achieve the calculated values, is usually satisfactory. The filter components should be installed in a screened box with short connections between them.

Note that the overall attenuation from probe input to oscilloscope input, at frequencies well above the notch frequency is:

$$A = Z_0/(Z_1+2R+Z_0)$$

rather than:

$$Z_0/(Z_1+Z_0) \text{ without the filter.}$$

For a x10 probe and a notch frequency of 50 Hz the probe attenuation without the filter is 20 dB while with the filter it is 25.3 dB at all frequencies except in the vicinity of the notch frequency. The attenuation exceeds 35 dB between 30 Hz and 82 Hz and exceeds 55 dB within ± 5% of the notch frequency.

It will be necessary to calibrate the attenuation of the probe/filter/oscilloscope combination over the required frequency range to check that the notch frequency has been sufficiently centred on the power frequency and the attenuation away from the notch frequency is constant near the design value. This attenuation value will be used to determine the true transient amplitude. At this stage it may be necessary to optimise the broad-band performance of the probe using the adjustments provided in the probe and then re-calibrate.

Alternatively, a fast acquisition digital oscilloscope may be used to store the data. Although the power supply frequency is not filtered, measurement of all transient types can be made with reference to the AC waveform. This is achieved by reducing the timebase, effectively zooming in on the transient using the data stored within the oscilloscope.

It should be noted that different limits may apply for systems operating at power line frequencies or voltages other than those specified in this section. In these cases the Procuring Authority may adjust the limits accordingly.

Prior to performing the test the contactor shall be validated. To ascertain that transient levels consistent with contact bounce do not mask those caused by the EUT, the test house shall ensure that the contactor meets the following validation. The set up shall be based on that given in **Figures NCE04-2** and **NCE04-3**. The difference being resistive load substitutes the EUT with a 10μF capacitor on each lead to the ground plane and the oscilloscope probes connected directly onto either

side of the contactor. The value of the load shall be such that the same current is drawn from the power source as when the EUT is connected.

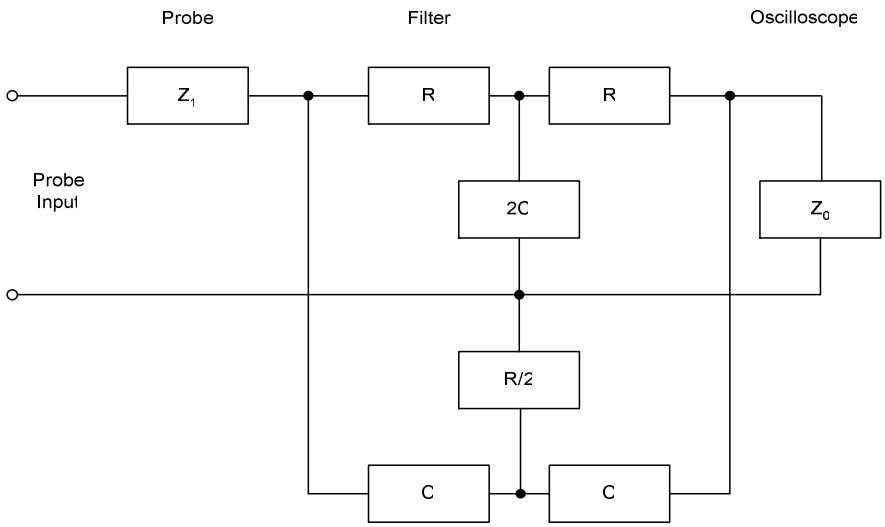

Figure 501-14 Basic Circuit for NCE04 Probe/Filter/Oscilloscope Combination

6.8 NCE05, Conducted Emission, Power, Signal and Control Leads, 30 Hz to 150 MHz

Applicability and Limits: This requirement is applicable to all power, signal and control leads connected to a EUT that are greater than 1 m in length. Particular attention should be given to leads that are installed in the same conduit, trunking or cable bundles as those of other systems fitted to the same platform where cross coupling can readily occur. Where internal EUT cables interface between different component parts of the EUT only and no part of the installation is closer than 15 cm to external cabling then these may be excluded from this test.

Where fibre optic cables that have a protective conducting sheaf, are used within an installation, they may also be subject to this test if run in close proximity to other cable harnesses or interference sources.

This requirement is also applicable for power leads, including returns that obtain power from other sources not part of the EUT for Land, Sea and Air applications.

For AC applications, this requirement is applicable starting at the second harmonic of the EUT power frequency.

This requirement is performed to control the levels of conducted interference appearing on EUT cabling which could couple to adjacent cabling from other systems installed on the same platform.

Reference shall be made to the Applicability **Table 501-7** before subjecting the EUT to this test method. Where some procuring authorities require testing to a higher frequency than normally covered by Test Method NCE02 then Test Method NCE05 should be used. If Test Method NCE05 is performed on the input power leads of a EUT then it is permissible to omit Test Methods NCE01 and NCE02 testing.

Test Procedures: During application of this test the 5 µH LISN must be used throughout as its impedance characteristic remains more stable at higher frequencies than that of the 50 µH LISN used in other test procedures.

When using current probes care should be taken to make sure that the cable under test passes through the centre of the internal aperture so that measurements are more repeatable. This can most

easily be achieved with the use of a former of some kind that holds the cable in place. When placing current probes on cabling minimise the effect of neighbouring cable harnesses on the measurement by maintaining the maximum separation distance to them.

Current probes should be positioned at a point 5 cm from each LISN terminal stud on each power lead tested. Supplies and their returns should be tested separately (common mode) and not as pairs (differential mode). Current probes should be positioned 5 cm from the EUT connector back shell of each signal and control lead being tested. Where signal or control leads are longer than 2 m then testing is required at both ends of the cable at frequencies above 30 MHz.

Ambient measurements are made on power leads prior to EUT testing with the EUT replaced by a resistive load drawing the same steady state current. Ambient measurements on signal and control lines are performed at the same location as the EUT measurement but with the EUT switched off. All EUT exercising equipment must be fully functional and connected in circuit during all ambient measurements, although it is understood that in some circumstances full functionality may not be achievable due to required interaction with the EUT. Care should be taken not to introduce additional interference from exercising equipment and wherever possible this should be of a passive nature or filtered to minimise interference levels.

For the purpose of the test the EUT should be powered and in its normal mode of operation throughout and some means of indication should be present to establish its correct operation.

6.9 NCS01, Conducted Susceptibility, Power Leads, 30 Hz to 150 kHz

Applicability and Limits: The requirement is applicable to power input leads that obtain power from other sources that are not part of the EUT. There is no requirement on power output leads. The basic concern is to ensure that equipment performance is not degraded from ripple voltages associated with allowable distortion of power source voltage waveforms.

The required signal is applicable only to the high sides on the basis that the concern is developing a differential voltage across the power input leads to the EUT. The series injection technique in the test procedure results in the voltage dropping across the impedance of the EUT power input circuitry. The impedance of the power return wiring is normally insignificant with respect to the power input over most of the required frequency range. Common mode voltages evaluations are addressed by other susceptibility tests such as NCS07 and NRS02. Injection on a power return will result in the same differential voltage across the power input; however, it will result in a large voltage at the return connection to the EUT with respect to the ground plane, which is considered unrealistic.

Similar to NCE02, the limits are based on a review of the power quality standards with emphasis toward the spectral content curves present in MIL-STD-704 Ref [16]. Rather than having a separate curve for each possible power source voltage, only two curves are specified. The voltage amplitude specified is approximately 6 dB above typical power quality limits, although the limit has been somewhat generalised to avoid complex curves. The margin between the limit and the power quality standard is necessary to allow for variations in performance between manufactured items.

The difference between the limits for NCE02 and NCS01 of approximately 26 dB should not be viewed as a margin. The NCE02 limit is placed so that ripple voltages do not exceed that allowed by the power quality standards due to interference contributions from multiple EUTs. Therefore, the power quality standard is the only valid basis of comparison.

The primary tailoring consideration for the procuring activity for contractual documents is adjustment of the limit to follow more closely a particular power quality standard.

Test Procedures: Since the applied voltage is coupled in series using a transformer, Kirchhoff's voltage law requires that the voltage appearing across the transformer output terminals must drop around the circuit loop formed by the EUT input and the power source impedance. The voltage level specified in the limit is measured across the EUT input because part of the transformer induced voltage can be expected to drop across the source impedance.

Earlier EMI standards introduced a circuit for a phase shift network, which was intended to cancel out AC power waveforms and allow direct measurement of the ripple present across the EUT. While these

devices very effectively cancel the power waveform, they return the incorrect value of the ripple and are not acceptable for use. The networks use the principle of inverting the phase of the input power waveform, adding it to the waveform (input power plus ripple) across the EUT, and presumably producing only the ripple as an output. For a clean power waveform, the network would perform properly. However, the portion of the ripple that drops across the power source impedance contaminates the waveform and gets recombined with the ripple across the EUT resulting in an incorrect value.

Voltages will appear across the primary side of the injection transformer due to the EUT current load at the power frequency. Larger current loads will result in larger voltages and are the predominant concern. These voltages can cause potential problems with the power amplifier. The circuit arrangement in **Figure 501-15** will substantially reduce this voltage and provide protection for the amplifier. This effect is accomplished by using a dummy load equal to the EUT and wiring the additional transformer so that its induced voltage is equal to and 180 degrees out of phase with the induced voltage in the injection transformer. If possible, the dummy load should have the same power factor as the EUT.

On initial turn on, DC-to-DC power switching converters can create large voltages on the primary side of the injection transformer that can damage the power amplifier. A precaution is to place a 5 Ω resistor across the primary and to disconnect the transformer during initial turn on.

The injected signal should be maintained as a sinusoid. Saturation of the power amplifier or coupling transformer may result in a distorted waveform.

If the return side of power is not connected to the shielded room ground, the oscilloscope may need to be electrically “floated” using an isolation transformer to correctly measure the injected voltage resulting in a potential shock hazard. Differential probe amplifiers are available which will convert a differential measurement between the high side and an isolated ground to a single-ended measurement where the measurement device can be grounded. These probes have an output that is suitable for measurement with either an oscilloscope or high impedance, frequency selective, receiver (provided the receiver can tolerate the high input voltage).

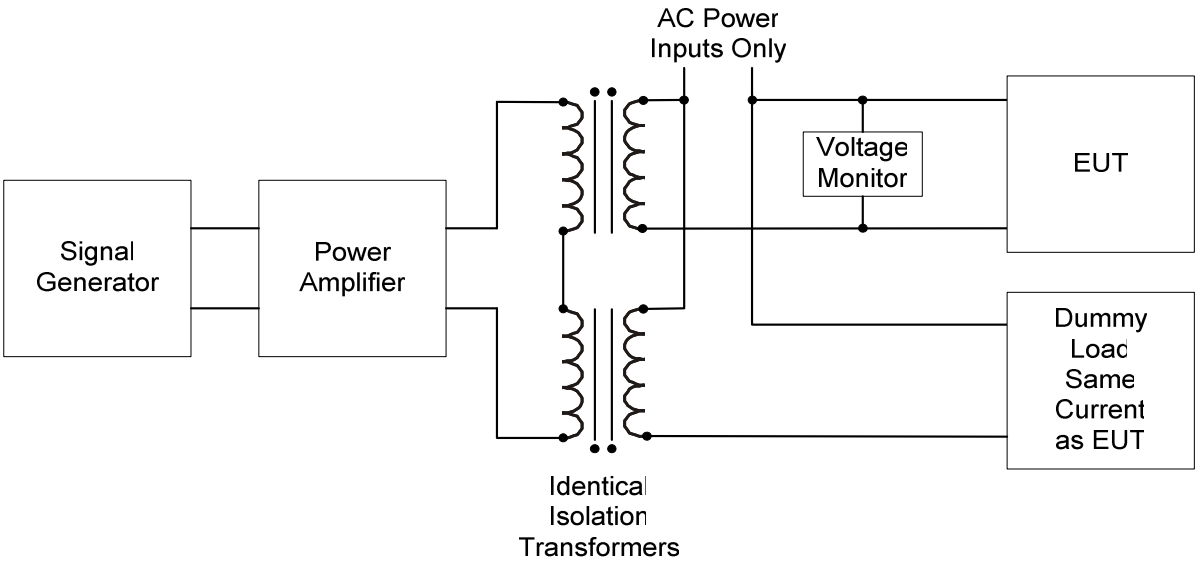

Figure 501-15 NCS01 Power Amplifier Protection

6.10 NCS02, Conducted Susceptibility, Control and Signal Leads, 30 Hz to 50 kHz

Applicability and Limits: The purpose of this test is to confirm that audio frequency currents which are likely to be flowing in cables adjacent to the EUT control and signal lines do not cause malfunction of the EUT.

This test is applicable to all interconnecting or control and signals leads greater than 1 metre in length connected to the EUT. Primary Power Lines which have been subject to NCS01 test are exempt from this test. Audio systems can be especially sensitive to this test

The effective coupling between cables is dependent upon length and separation. Electromagnetic radiation is produced by conductors in which currents or voltages are changing. In the near field (i.e. at distances less than $\lambda/2\pi$ at the relevant frequency) the induction components are dominant but these components decrease rapidly with distance (proportional to $1/d^2$ or $1/d^3$ at a distance d). In the far field (i.e. at distances greater than $\lambda/2\pi$) the radiation field, which varies as 1/d, is dominant.

The limits for this test are representative of those typically found in most military installations and have been derived by empirical measurements. The procuring authority should give consideration to tailoring the limits at frequencies where high-level ripple is expected. For the airside, the frequency range of the enhanced limit (146dBµA), may need to be adjusted depending on the frequency range of the aircraft's ac power system e.g. if the equipment is installed on aircraft whose primary power is variable over a frequency range of 350 Hz – 800 Hz then the enhanced limit should cover this band.

Test Procedures: The test wire shall be closely coupled to each cable form to be tested by wrapping an insulated current carry wire spiralling at a two turn per metre equally spaced and running the whole of the cable bundle to within 15cms of each end connector.

The test wire shall be energized with the specified current over the required frequency range and monitored by means of a suitable method and device (e.g. ammeter/test receiver, voltmeter/resistor, current probe etc.) capable of measuring up to 50 kHz. The cable bundle under test shall be mounted on 5 cm non-conducting spacers with respect to the ground plane.

The test signal shall consist of an unmodulated carrier wave and shall be maintained at the test limit current across the test frequency range.

Should malfunctions be found during the test the current shall be reduced until the threshold is established then recorded.

6.11 NCS03, Conducted Susceptibility, Antenna Port, Intermodulation, 15 kHz to 10 GHz

Applicability and Limits: The intent of this requirement is to control the response of antenna-connected receiving subsystems to in-band signals resulting from potential intermodulation products of two signals outside of the intentional passband of the subsystem produced by non-linearities in the subsystem. The requirement can be applied to receivers, transceivers, amplifiers, and the like. Due to the wide diversity of subsystem designs being developed, the applicability of this type of requirement and appropriate limits need to be determined for each procurement. Also, requirements need to be specified that are consistent with the signal processing characteristics of the subsystem and the particular test procedures to be used to verify the requirement.

One approach for determining levels required for the out-of-band signals is from an analysis of the electromagnetic environments present and characteristics of receiving antennas. However, levels calculated by this means will often place unreasonable design penalties on the receiver. For example, if an external environment of 200 V/m is imposed on a system, an isotropic antenna at 300 MHz will deliver 39 dBm to the receiver. This level represents a severe design requirement to many receivers. An alternative approach is to simply specify levels that are within the state-of-the-art for the particular receiver design.

This requirement is most applicable to fixed frequency, tuneable, superheterodyne receivers. Previous versions of this standard required normal system performance with the two out-of-band signals to be 66 dB above the level required to obtain the standard reference output for the receiver. One signal was raised to 80 dB above the reference in the 2 to 25 MHz and 200 to 400 MHz bands to account for

transmissions from HF and UHF communication equipment. Maximum levels for both signals were limited to 10 dBm. As an example, conventional communication receivers commonly have sensitivities on the order of -100 dBm. For this case, the 66 dB above reference signal is at -34 dBm and the 80 dB above reference signal is at -20 dBm. Both are substantially below the 10 dBm maximum used in the past.

For other types of receivers, application of this requirement is often less straightforward and care must be taken to ensure that any applied requirements are properly specified. Many receivers are designed to be interference or jam resistant and this feature may make application of this requirement difficult or inappropriate.

One complicating factor is that one of the out-of-band signals typically is modulated with a waveform normally used by the receiver. For receivers that process a very specific modulation, the issue exists whether an out-of-band signal can reasonably be expected to contain that modulation. Another complicating factor is related to the potential intermodulation products resulting from two signals. Responses from intermodulation products can be predicted to occur when $f_o = mf_1 + nf_2$ where f_o is the operating frequency of the receiver, m and n are integers, and f_1 and f_2 are the out-of-band signals. For receivers, which continuously change frequency (such as frequency agile or frequency hopping), the relationship will be true only for a portion of the operating time of the receiver, unless the out-band-signals are also continuously tuned or the receiver operating characteristics are modified for the purpose of evaluation.

Test Procedures: No test procedures are provided in this category of the standard for this requirement. Because of the large variety of receiver designs being developed, the requirements for the specific operational characteristics of a receiver must be established before meaningful test procedures can be developed. Only general testing techniques are discussed here.

Intermodulation testing can be applied to a variety of receiving subsystems such as receivers, RF amplifiers, transceivers and transponders.

Several receiver front-end characteristics must be known for proper testing for intermodulation responses. These characteristics generally should be determined by test. The maximum signal input that the receiver can tolerate without overload needs to be known to ensure that the test levels are reasonable and that the test truly is evaluating intermodulation effects. The bandpass characteristics of the receiver are important for determining frequencies near the receiver fundamental f_o that will be excluded from test. Requirements for this test are generally expressed in terms of a relative degree of rejection by specifying the difference in level between potentially interfering signals and the established sensitivity of the receiver under test. Therefore, determination of the sensitivity of the receiver is a key portion of the test.

The basic concept with this test is to combine two out-of-band signals and apply them to the antenna port of the receiver while monitoring the receiver for an undesired response. One of the out-of-band signals is normally modulated with the modulation expected by the receiver. The second signal is normally continuous wave (CW). **Figure 501-16** shows a general set-up for this test.

For applications where the receiver would not provide an indication of interference without a receive signal being present, a third signal can be used at the fundamental. This arrangement may also be suitable for some receivers that process a very, specialised type of modulation, which would never be expected on an out-of-band signal. An option is for the two out-of-band signals to be CW for this application.

The frequency of the two out-of-band signals should be set such that $f_o = 2f_1 - f_2$ where f_o is the tuned frequency of the receiver and f_1 and f_2 are the frequencies of the signal sources. This equation represents a third order intermodulation product, which is the most common response observed in receivers. f_1 and f_2 should be swept or stepped over the desired frequency range while maintaining the relationship in the equation. It is important to verify that any responses noted during this test are due to intermodulation responses. Responses can result from simply lack of rejection to one of the applied signals or from harmonics of one of the signal sources. Turning off each signal source in turn and noting whether the response remains can demonstrate the source of the response.

For receivers with front-end mixing and filtering in an antenna module, the test may need to be designed to be performed on a radiated basis. All signals would need to be radiated and assurances provided that any observed intermodulation products are due to the receiver and not caused by items in the test area. The EMITP would need to address antenna types, antenna locations, antenna polarisation and field measurement techniques. This test would probably need to be performed in an anechoic chamber.

For frequency hopping receivers, one possible approach is choose an f_o within the hop set and set up the signals sources as described above. The performance of the receiver could then be evaluated as the receiver hops. If the frequency hopping receiver has a mode of operation using just one fixed frequency, this mode should also be tested.

A common error made in performing this test procedure is attributing failures to the EUT, which are actually harmonics of the signal source or intermodulation products generated in the test set-up. Therefore, it is important to verify that the signals appearing at the EUT antenna port are only the intended signals through the use of a measurement receiver as shown in **Figure 501-16**. Damaged, corroded, and faulty components can cause signal distortion resulting in misleading results. Monitoring will also identify path losses caused by filters, attenuators, couplers, and cables.

Typical data for this test procedure for the EMITR are the sensitivity of the receiver, the levels of the signal sources, frequency ranges swept, operating frequencies of the receivers, and frequencies and threshold levels associated with any responses.

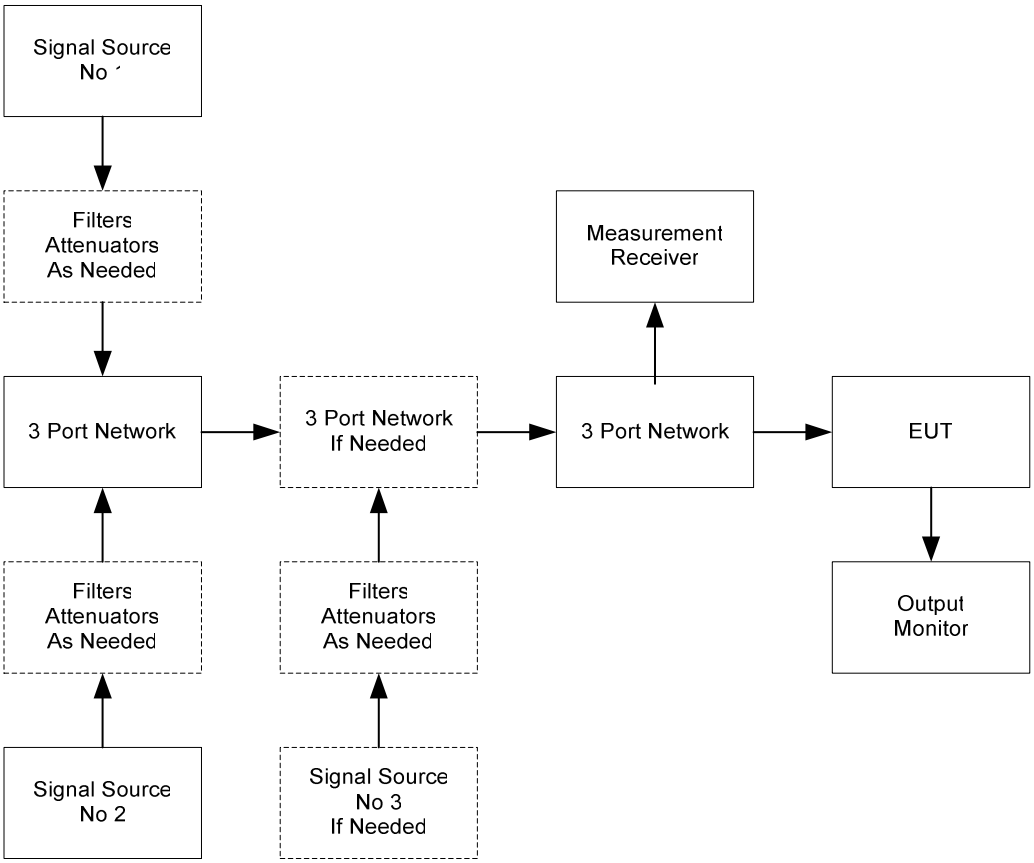

Figure 501-16 NCS03 General Test Set-Up

6.12 NCS04, Conducted Susceptibility, Antenna Port Rejection of Undesired Signals 30 Hz to 20 GHz

Applicability and Limits: The intent of this requirement is to control the response of antenna-connected receiving subsystems to signals outside of the intentional passband of the subsystem. The requirement can be applied to receivers, transceivers, amplifiers, and the like. Due to the wide diversity of subsystem designs being developed, the applicability of this type of requirement and appropriate limits need to be determined for each procurement. Also, requirements need to be specified that are consistent with the signal processing characteristics of the subsystem and the particular test procedures to be used to verify the requirement.

One approach for determining levels required for the out-of-band signal can be determined from an analysis of the electromagnetic environments present and characteristics of receiving antennas. However, levels calculated by this means will often place unreasonable design penalties on the receiver. For example, if an external environment of 200 V/m is imposed on a system, an isotropic antenna at 300 MHz will deliver 39 dBm to the receiver. This level represents a severe design requirement to many receivers. An alternative approach is to simply specify levels that are within the state-of-the-art for the particular receiver design.

This requirement is most applicable to fixed frequency, tuneable, superheterodyne receivers.

For other types of receivers, application of this requirement is often less straightforward and care must be taken to ensure that any applied requirements are properly specified. Many receivers are designed to be interference or jam resistant and this feature may make application of this requirement difficult or inappropriate.

This requirement is usually specified using either one or two signals. With the one signal requirement, the signal is out-of-band to the receiver and is modulated with a waveform normally used by the receiver. No in-band signal is used. For receivers that process a very specific modulation, the issue exists whether an out-of-band signal can reasonably be expected to contain that modulation. An alternative is to specify the requirement for two signals. An in-band signal can be specified which contains the normal receiver modulation. The out-of-band signal can be modulated or unmodulated with the criterion being that no degradation in reception of the intentional signal is allowed.

Test Procedures: No test procedures are provided in this category of the standard for this requirement. Because of the large variety of receiver designs being developed, the requirements for the specific operational characteristics of a receiver must be established before meaningful test procedures can be developed. Only general testing techniques are discussed here.

Front-end rejection testing can be applied to a variety of receiving subsystems such as receivers, RF amplifiers, transceivers, and transponders.

Several receiver front-end characteristics must be known for proper testing. These characteristics generally should be determined by test. The maximum signal input that the receiver can tolerate without overload needs to be known to ensure that the test levels are reasonable. The bandpass characteristics of the receiver are important for determining frequencies near the receiver fundamental that will be excluded from testing. Requirements for this test are often expressed in terms of a relative degree of rejection by specifying the difference in level between a potentially interfering signal and the established sensitivity of the receiver under test. Therefore, determination of the sensitivity of the receiver is a key portion of the test.

The basic concept with this test procedure is to apply out-of-band signals to the antenna port of the receiver while monitoring the receiver for degradation. **Figure 501-17** shows a general test set-up for this test. There are two common techniques used for performing this test using either one or two signal sources. For the one signal source procedure, the signal source is modulated with the modulation expected by the receiver. It is then swept over the appropriate frequency ranges while the receiver is monitored for unintended responses. With the two signal source procedure, a signal appropriately modulated for the receiver is applied at the tuned frequency of the receiver. The level of this signal is normally specified to be close to the sensitivity of the receiver. The second signal is unmodulated and

is swept over the appropriate frequency ranges while the receiver is monitored for any change in its response to the intentional signal.

The two signal source procedure is more appropriate for most receivers. The one signal source procedure may be more appropriate for receivers that search for a signal to capture since they may respond differently once a signal has been captured. Some receivers may need to be evaluated using both procedures to be completely characterised.

For frequency hopping receivers, one possible approach is to use a one signal procedure as if the EUT did not have a tuned frequency (include frequency scanning across the hop set) to evaluate the jamming/interference resistance of the receiver. If a frequency hopping receiver has a mode of operation using just one fixed frequency, this mode should also be tested.

For receivers with front-end mixing and filtering in an antenna module, the test may need to be designed to be performed on a radiated basis. All signals would need to be radiated and assurances provided that any observed responses are due to the receiver and not caused by items in the test area. The EMITP would need to address antenna types, antenna locations, antenna polarisation, and field measurement techniques. This test would probably need to be performed in an anechoic chamber.

A common error made in performing this test procedure is attributing failures to the EUT, which are actually harmonics or spurious outputs of the signal source. Therefore, it is important to verify that the signals appearing at the EUT antenna port are only the intended signals through the use of a measurement receiver as shown in **Figure 501-17**. Damaged, corroded, and faulty components can cause signal distortion resulting in misleading results. Monitoring will also identify path losses caused by filters, attenuators, couplers, and cables.

Typical data for this test procedure for the EMITR are the sensitivity of the receiver, the levels of the signal sources, frequency ranges swept, operating frequencies of the receivers, degree of rejection (dB), and frequencies and threshold levels associated with any responses.

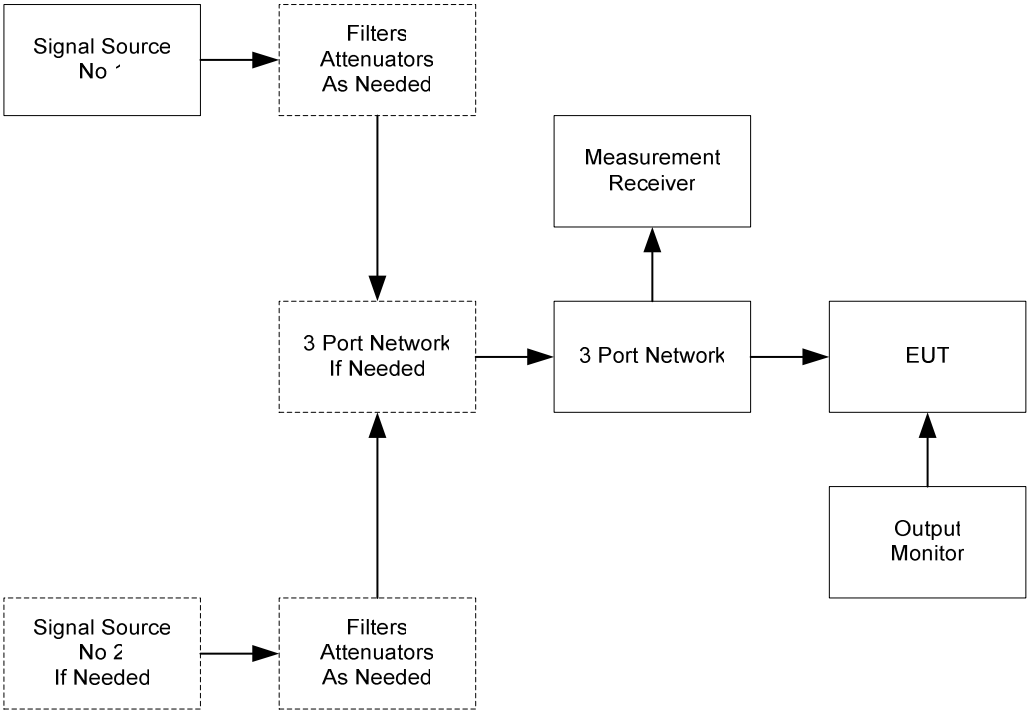

Figure 501-17 NCS04 General Test Set-Up

6.13 NCS05, Conducted Susceptibility, Antenna Port, Cross Modulation, 30 Hz to 20 GHz

Applicability and Limits: The intent of this requirement is to control the response of antenna-connected receiving subsystems to modulation being transferred from an out-of-band signal to an in-band signal. This effect results from a strong, out-of-band signal near the operating frequency of the receiver that modulates the gain in the front-end of the receiver and adds amplitude varying information to the desired signal. The requirement should be considered only for receivers, transceivers, amplifiers, and the like, which extract information from the amplitude modulation of a carrier. Due to the wide diversity of subsystem designs being developed, the applicability of this type of requirement and appropriate limits need to be determined for each procurement. Also, requirements need to be specified that are consistent with the signal processing characteristics of the subsystem and the particular test procedure to be used to verify the requirement.

One approach for determining levels required for the out-of-band signal can be determined from an analysis of the electromagnetic environments present and characteristics of receiving antennas. However, levels calculated by this means will often place unreasonable design penalties on the receiver. For example, if an external environment of 200 V/m is imposed on a system, an isotropic antenna at 300 MHz will deliver 39 dBm to the receiver. This level represents a severe design requirement to many receivers. An alternative approach is to simply specify levels that are within the state-of-the-art for the particular receiver design.

This requirement is most applicable to fixed frequency, tuneable, superheterodyne receivers

For other types of receivers, application of this requirement is often less straightforward and care must be taken to ensure that any applied requirements are properly specified. Many receivers are designed to be interference or jam resistant and this feature may make application of this requirement difficult or inappropriate.

One complicating factor is that one of the out-of-band signals typically is modulated with a waveform normally used by the receiver. For receivers that process a very specific modulation, the issue exists whether an out-of-band signal can reasonably be expected to contain that modulation. Another factor is that the out-of-band signal is normally specified to be close to the receiver operating frequency. For receivers that continuously change frequency (such as frequency agile or frequency hopping), an appropriate relationship may exist for only short periods for a fixed frequency out-of-band signal.

Test Procedures: No test procedures are provided in this category of the standard for this requirement. Because of the large variety of receiver designs being developed, the requirements for the specific operational characteristics of a receiver must be established before meaningful test procedures can be developed. Only general testing techniques are discussed in this appendix.

Cross modulation testing should be applied only to receiving subsystems such as receivers, RF amplifiers, transceivers and transponders which extract information from the amplitude modulation of a carrier.

Several receiver front-end characteristics must be known for proper testing for cross modulation responses. These characteristics generally should be determined by test. The maximum signal input that the receiver can tolerate without overload needs to be known to ensure that the test levels are reasonable. The bandpass characteristics of the receiver are important for determining frequencies near the receiver fundamental that will be excluded from test. Requirements for this test are generally expressed in terms of a relative degree of rejection by specifying the difference in level between potentially interfering signals and the established sensitivity of the receiver under test. Therefore, determination of the sensitivity of the receiver is a key portion of the test.

The basic concept with this test is to apply a modulated signal out-of-band to the receiver and to determine whether the modulation is transferred to an unmodulated signal at the receiver's tuned frequency resulting in an undesired response. There may be cases where the in-band signal needs to be modulated if the receiver characteristics so dictate. The level of the in-band signal is normally adjusted to be close to the receiver's sensitivity. The out-of-band signal is modulated with the modulation expected by the receiver. It is then swept over the appropriate frequency ranges while the receiver is monitored for unintended responses. Testing has typically been performed over a frequency

range + the receiver intermediate frequency (IF) centred on the receiver's tuned frequency. **Figure 501-18** shows a general set-up for this test.

For receivers with front-end mixing and filtering in an antenna module, the test may need to be designed to be performed on a radiated basis. All signals would need to be radiated and assurances provided that any responses are due to the receiver and not caused by items in the test area. The EMITP would need to address antenna types, antenna locations, antenna polarisation and field measurement techniques. This test would probably need to be performed in an anechoic chamber.

For frequency hopping receivers, one possible approach is choose an f_o within the hop set and set up the signals sources as described above. The performance of the receiver could then be evaluated as the receiver hops. If the frequency hopping receiver has a mode of operation using just one fixed frequency, this mode should also be tested.

It is important to verify that the signals appearing at the EUT antenna port are only the intended signals through the use of a measurement receiver as shown in **Figure 501-18**. Damaged, corroded, and faulty components can cause signal distortion resulting in misleading results. Monitoring will also identify path losses caused by filters, attenuators, couplers, and cables.

Typical data for this test procedure for the EMITR are the sensitivity of the receiver, the levels of the signal sources, frequency ranges swept, operating frequencies of the receivers, and frequencies and threshold levels associated with any responses.

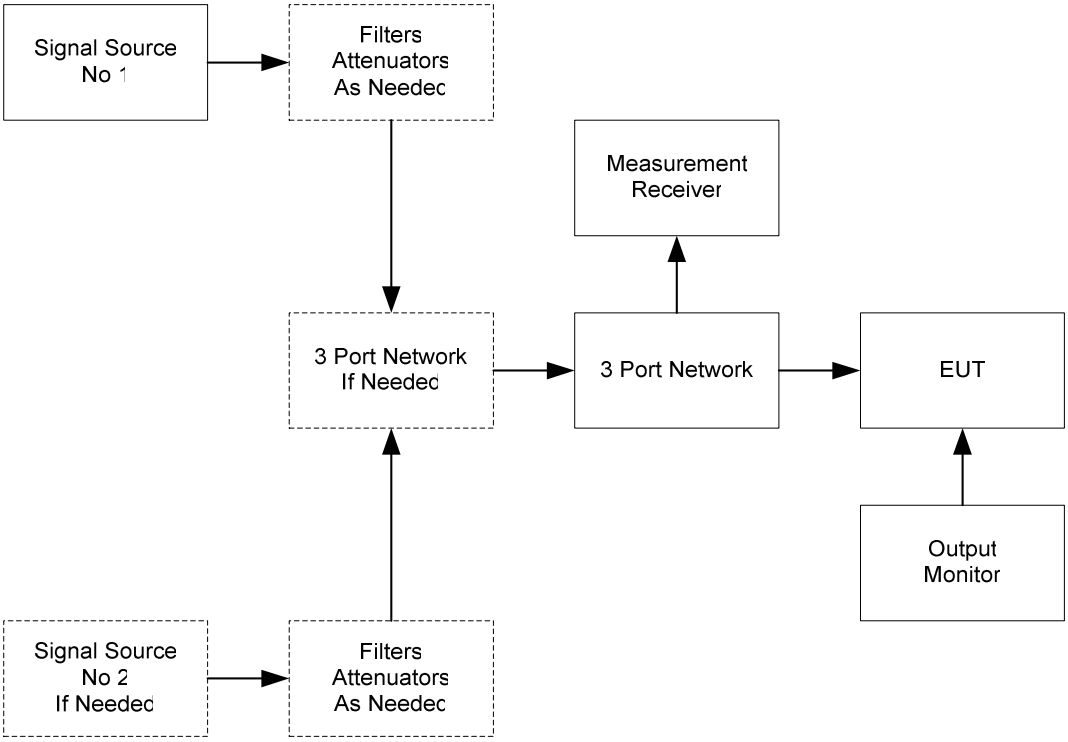

Figure 501-18 NCS05 General Test Set-Up

6.14 NCS06, Conducted Susceptibility, Structure Current, 60 Hz to 100 kHz

Applicability and Limits: This requirement is specialised and is intended to be applied only for very sensitive equipment (1 µV or better) such as tuned receivers operating over the frequency range of the test. The basic concern of the requirement is to ensure that equipment does not respond to magnetic fields caused by currents flowing in platform structure and through EUT housing materials. The magnetic fields are sufficiently low that there is no concern with most circuitry.

An estimate can be made of induced voltages that may result from the required NCS06 currents. Magnetic fields act by inducing voltages into loop areas in accordance with Faraday's law:

$$(V = -d\phi/dt)$$

For a constant magnetic field perpendicular to a given loop area, Faraday's law reduces to;

$$V = -2\pi fBA$$

Where: f = Frequency of Interest B = Magnetic Flux Density A = Loop Area

Since Faraday's law indicates that these voltages are proportional to frequency, the maximum voltage from the NCS06 currents will result at the 20 kHz knee of the curve for a given loop area. A drop of, 20 dB/decade would result in a constant voltage. Since the curve, is dropping at only, 10 dB/decade below 20 kHz, the induced voltage will rise as frequency increases. The sharp drop off above 20 kHz results in decreasing voltages with increasing frequency.

If the 103 dBμA current at 20 kHz specified in the requirement is assumed to spread uniformly over a cross-sectional dimension of 10 cm, the surface current density and the resulting magnetic field intensity at the surface would be 1.41 A/m. In air, this value corresponds to magnetic flux density of 1.77×10^{-6} Tesla. If it is further assumed that this magnetic field is uniform over a circuit loop area of 0.001 square metres (such as 20 cm by 0.5 cm) within the enclosure, Faraday's Law predicts an induced voltage of 222 μV.

Similar calculations, at 400 Hz and 100 kHz, yield values of 31 μV and 8 μV, respectively.

It is apparent that design considerations such as proper grounding techniques, minimising of loop areas, and common mode rejection concepts need to be implemented to prevent potential problems with very sensitive circuits used in submarines such as low frequency tuned receivers. However, these levels are well below the sensitivity of typical circuits used in other equipment.

The limit is derived from operational problems due to current conducted on equipment cabinets and laboratory measurements of response characteristics of selected receivers.

No tailoring is recommended.

Test Procedures: Electrical connection needs to be made to the external structure of the EUT and damage to the external finish should be minimised. Screws or protuberances at ground potential near the diagonal corners of the EUT should normally be used as test points. Connections should be made with clip or clamp type leads. If convenient test points are not available at the diagonal corners, a sharply pointed test probe should be used to penetrate the finish in place of the clip or clamp type lead.

The requirement to maintain the leads perpendicular to the surface for at least 50 cm is to minimise effects on the path of current flow along the surface from the magnetic fields caused by the current in the leads.

Coupling transformers used to perform NCS01 testing are normally suitable for this test. The electrical isolation, that is provided by the coupling transformer eliminates the need to electrically “float” the amplifier and signal source that could result in a potential shock hazard.

6.15 NCS07, Conducted Susceptibility, Bulk Cable Injection, 10 kHz to 200 MHz

Applicability and Limits: The requirements are applicable to all electrical cables interfacing with the EUT enclosures. The basic concept is to simulate currents that will be developed on platform cabling from electromagnetic fields generated by antenna transmissions both on and off the platform. Investigation into aircraft carrier hangar deck electromagnetic environment test data from 9 aircraft carriers showed that significant HF electric field levels are present. Measurements from on-board HF transmitters showed field levels in the 2 to 30 MHz band up to 42 V/m in the hanger deck. Therefore, for equipment located in the aircraft hanger deck, the same limit that is used for non-metallic ships (below decks), is being used in the 2 to 30 MHz frequency range. In addition, a low frequency limit (77 dBμA) has been added from 4 kHz to 1 MHz for EUTs on surface ships and submarines with solid state power generation (in contrast to electromechanical generation equipment) to simulate common

mode currents that have been found to be present on AC power cables. The measured common mode currents have exceeded the previous NCS07 Ships (metallic, below decks) and Submarines (internal) limits by up to 50 dB.

An advantage of this type of requirement is that it provides data that can be directly related to induced current levels measured during platform-level evaluations. An increasingly popular technique is to illuminate the platform with a low level, relatively uniform field while monitoring induced levels on cables. Then, either laboratory data can be reviewed or current injection done at the platform with the measured currents scaled to the full threat level. This same philosophy has been applied to lightning and electromagnetic pulse testing.

Due to size constraints and available field patterns during radiated susceptibility testing (such as NRS02), it has long been recognised that cabling cannot be properly excited to simulate platform effects at lower frequencies. The most notable example of this situation is experience with HF (2 to 30 MHz) radio transmissions. HF fields have caused numerous problems in platforms through cable coupling. However, equipment items rarely exhibit problems in this frequency range during laboratory testing.

The limits are primarily derived from testing on aircraft that were not designed to have intentionally shielded volumes. The basic structure is electrically conductive; however, there was no attempt to ensure continuous electrical bonding between structure members or to close all apertures. The shape of the limit reflects the physics of the coupling with regard to resonant conditions, and the cable length with respect to the interfering frequency wavelength. At frequencies below resonance, coupling is proportional to frequency (20 dB/decade slope). Above resonance, coupled levels are cyclic with frequency with a flat maximum value. The 10 dB/decade decrease in the limit level at the upper frequency portion is based on actual induced levels in the aircraft testing data base when worst-case measurements for the various aircraft are plotted together. From coupling theory for a specific cable, the decrease would be expected to be cyclic with frequency with an envelope slope of 40 dB/decade.

The basic relationship for the limit level in the resonance (flat) portion of the curve is 1.5 mA per V/m that is derived from worst-case measurements on aircraft. For example, 110 dBμA corresponds to 200 V/m. At resonance, the effective shielding effectiveness of the aircraft can be zero. Application of these results to other platforms is reasonable.

The frequency range of 10 kHz to 200 MHz is now standardised for all applications. The optional frequency range of 200 MHz to 400 MHz is deleted because of the questionable validity of performing bulk cable measurements at higher frequencies.

For submarines, the NCS07 limit distinguishes between equipment located internal versus external to the pressure hull. For equipment installed internal to the pressure hull, the curve 2 limit is now specified above 30 MHz to account for portable transmitters used with the submarine. For equipment located external to the pressure hull, stricter limits are imposed to more closely reflect the electromagnetic environment. The external NCS07 limits should be applied only to equipment that is required to be fully operational when located above the waterline. Separate limits are specified, which are less severe, for equipment that is “external” to the pressure hull but located with the submarine superstructure (metallic boundary).

The limits maybe tailored by the procuring activity in contractual documents with a curve, whose amplitude is based on the expected field intensity for the installation and a breakpoint for the curve based on the lowest resonance associated with the platform. Tailoring of the frequency of application can be done based on the operating frequencies of antenna-radiating equipment. Tailoring should also include transmitters that are not part of the platform. For equipment used in benign environments, the requirement may not be necessary.

Test Procedures: This type of test is often considered as a bulk current test since current is the parameter measured. However, it is important to note that the test signal is inductively coupled and that Faraday's law predicts an induced voltage in a circuit loop with the resultant current flow and voltage distribution dependent on the various impedances present.

The calibration fixture with terminations is a 50 Ω transmission line. Since the injection probe is around the centre conductor within the fixture, a signal is being induced in the loop formed by the centre conductor, the two 50 Ω loads, and the structure of the fixture to which the 50 Ω loads are terminated. From a loop circuit standpoint, the two 50 Ω loads are in series, providing a total loop impedance of 100 Ω. Because of the transmission line configuration, inductance effects are minimised. Measurement of induced current levels is performed by measuring a corresponding voltage across one of the 50 Ω loads. Since the 50 Ω loads are in series for the induced signal, the total drive voltage is actually two times that being measured.

The actual current that appears on a tested cable from the pre-calibrated drive signal depends on the loop impedance associated with the cable and the source impedance characteristics of the drive probe and amplifier. If the loop impedance is low, such as would often result with an overall shielded cable, currents greater than those the calibration fixture will result. The maximum required current is limited to 6 dB above the pre-calibration level.

This test procedure is applicable to all EUT cabling.

A commonly used calibration fixture is shown in **Figure 501-19**. Other designs are available. The top is removable to permit the lower frequency probes to physically fit. The calibration fixture can be scaled to accommodate larger injection probes. **Figure 501-20** displays the maximum VSWR that this calibration fixture should exhibit when measured without a current probe installed in the fixture. The presence of a probe will usually improve the VSWR of the fixture.

Note: Vertical Cross-Section at Center of Fixture Shown

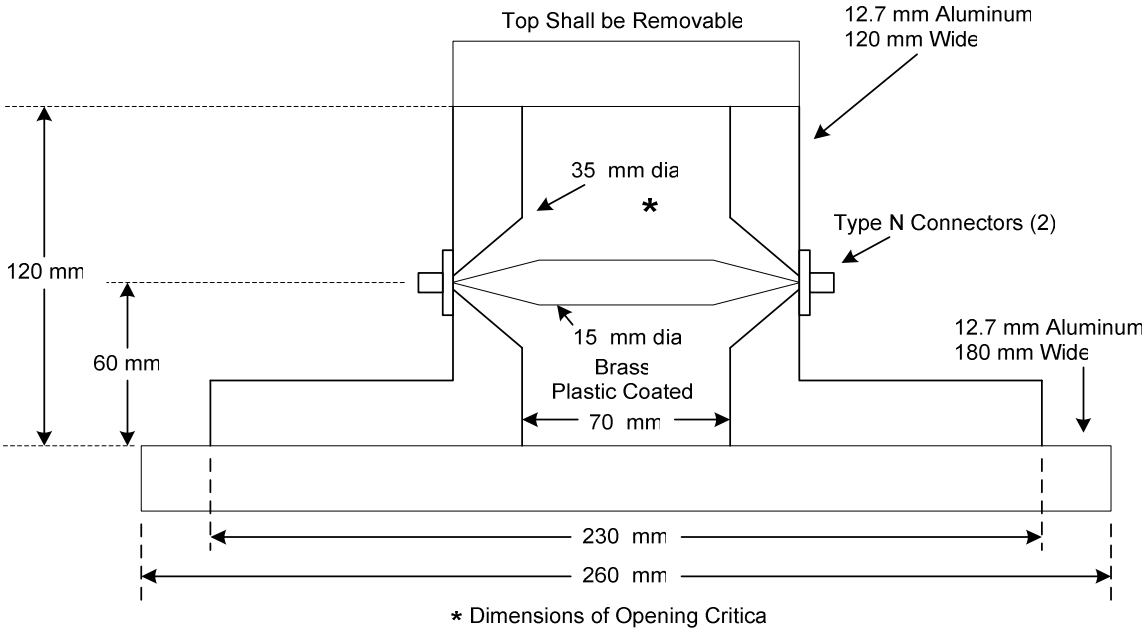

Figure 501-19 Typical NCS07 Calibration Fixture

An advantage of this type of conducted testing as compared to radiated susceptibility testing is that voltage and current levels can be more easily induced on the interfaces that are comparable to those present in installations. The physical dimensions of the EUT cabling in a test set-up are often not large enough compared to the installation for efficient coupling at lower frequencies.

In the past, some platform-level problems on Navy aircraft could not be duplicated in the laboratory using the standard test procedures in other test standards. It was determined that differences between the aircraft installation and laboratory set-ups regarding the laboratory ground plane and avionics (aircraft electronics) mounting and electrical bonding practices were responsible. Most avionics are

mounted in racks and on mounting brackets. At RF, the impedances to general aircraft structure for the various mounting schemes can be significantly different than they are with the avionics mounted on a laboratory ground plane. In the laboratory, it is not always possible to produce a reasonable simulation of the installation. A ground plane, interference (GPI) test was developed to detect potential failures due to the higher impedance. In the GPI test, each enclosure of the EUT, in turn, is electrically isolated above the ground plane and a voltage is applied between the enclosure and the ground plane to simulate potential differences that may exist in the installation. Since NCS07 provides similar common mode stresses at electrical interfaces as the GPI, the GPI is not included in this standard. However, the Navy may prefer to perform an additional susceptibility scan for aircraft applications with an inductor placed between the EUT enclosure and ground plane to more closely emulate the results of a GPI set-up. The primary side of a typical NCS01 injection transformer is considered to be an appropriate inductor.

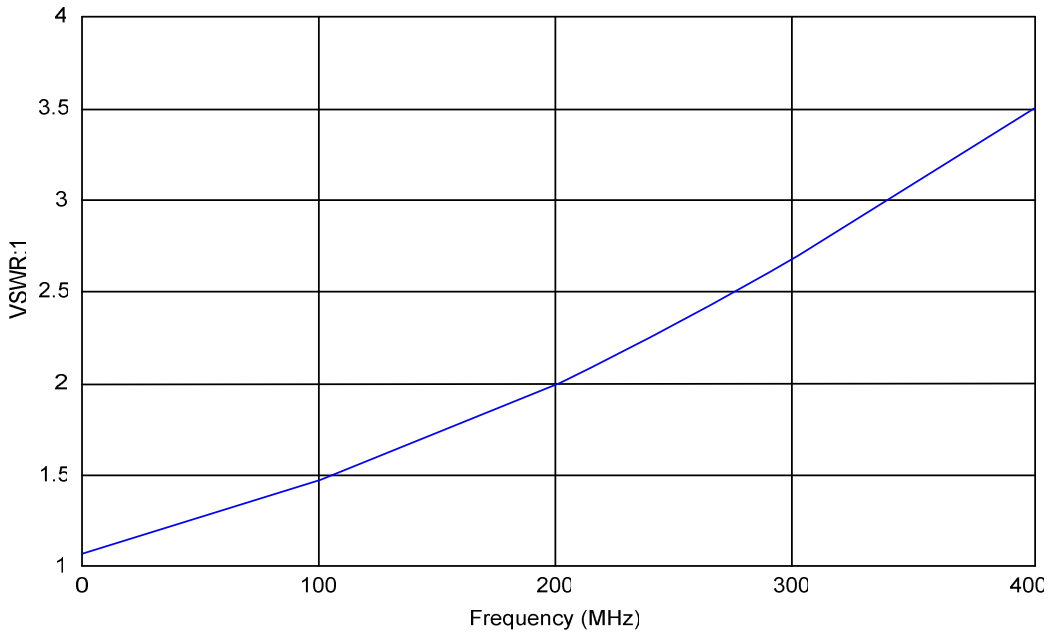

Figure 501-20 Maximum VSWR of Calibration Fixture

NCS07 has several advantages over the GPI as a general evaluation procedure. The GPI often results in significant current flow with little voltage developed at lower frequencies. NCS07 is a controlled current test. A concern with the GPI test, which is not associated with NCS07, is that the performance of interface filtering can be altered due to isolation of the enclosure from the ground plane. The results of NCS07 are more useful since the controlled current can be compared with current levels present in the actual installation induced from fields. This technique has commonly been used in the past for certification of aircraft as safe to fly.

Testing is required on both entire power cables and power cables with the returns removed to evaluate common mode coupling to configurations that may be present in different installations. In some installations, the power returns are routed with the high side wiring. In other installations, power returns are tied to system structure near the utilisation equipment with system structure being used as the power return path.

Insertion loss characteristics of injection probes are specified in **Figure NCS07-2**. A control on insertion loss has been found to be necessary to obtain consistency in test results. Insertion loss is measured as shown in **Figure 501-21**. It is the difference in dB of the power applied to the probe installed in the calibration fixture and the power level detected by the measurement receiver. Lower insertion loss indicates more efficient coupling. Since the signal level that is induced in the calibration fixture is equally divided between the 50 Ω coaxial load and the measurement receiver, the lowest

possible loss is 3 dB. The use of a network analyser or measurement receiver that includes a tracking generator can simplify the measurement.

Techniques using network analysers or spectrum analysers with tracking generators can simplify the measurements for both **Clause 21.3.4.b** calibration and **Clause 21.3.4.c** EUT testing in Test Method NCSO7. For example, the output signal can first be set to a predetermined value such as 1 mW and the flatness of the signal with frequency can be separately verified through a direct connection to the receiver. With this same signal then applied to the directional coupler, the induced level in the calibration fixture can be directly plotted.

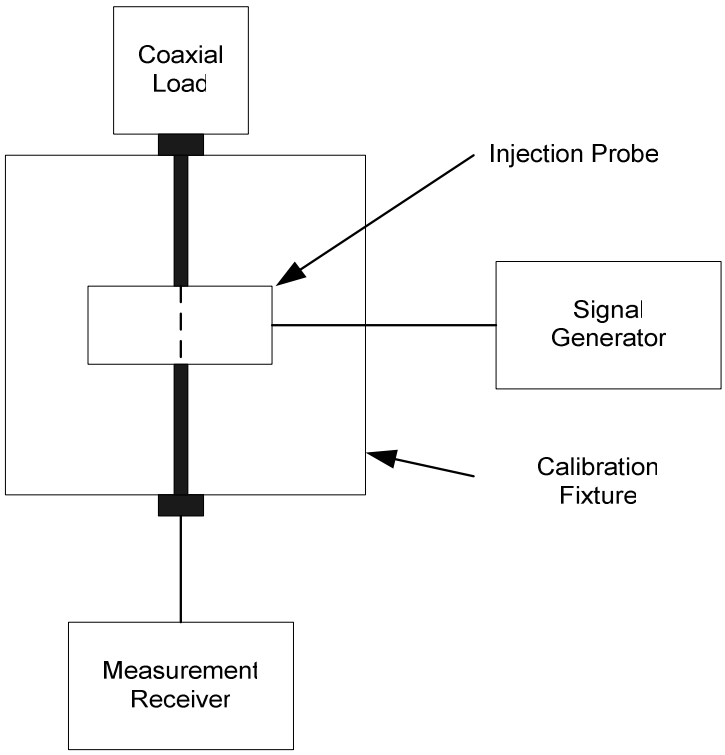

Figure 501-21 Insertion Loss Measurement

The lower frequency limit for ships and submarines has been extended to 4 kHz to simulate common mode currents that have been found to be present on AC power cables for EUTs installed on platforms with solid state power generation (ships and submarines). The calibration limit from 4 kHz to 10 kHz is 77 dBµA. This limit is achievable with 100 watt power amplifier and an injection probe which complies with the insertion loss requirement of **Figure NCS07-2**. A possible alternative to the injection probe method below 10 kHz is to utilize a NCS01 injection transformer in each power lead and to drive all in parallel. The common mode current is measured between the injection transformers and the EUT power input. The alternative method for a three-phase ungrounded power system is shown schematically in **Figure 501-22**.

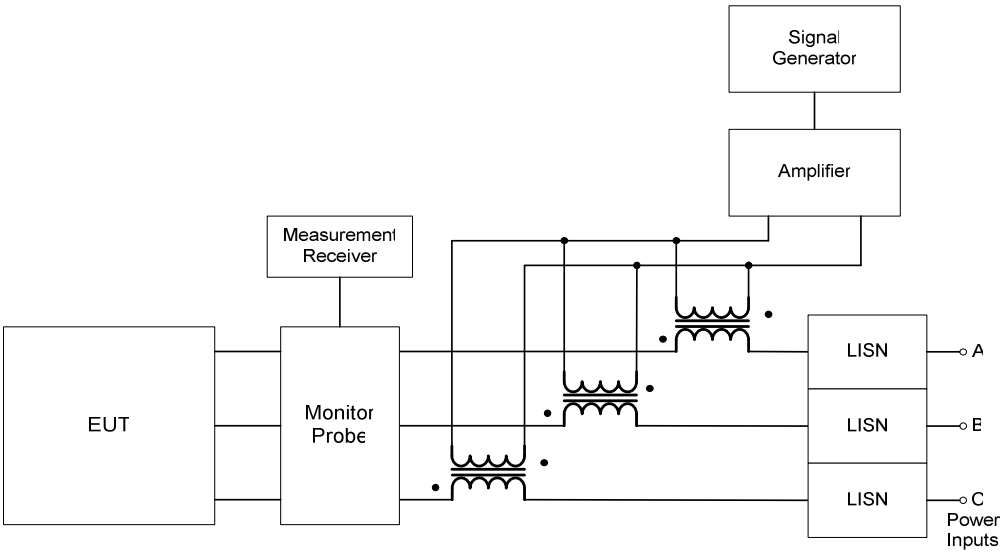

Figure 501-22 NCS07 Alternative Test Setup, Three Phase Ungrounded Power System

6.16 NCS08, Conducted Susceptibility, Bulk Cable Injection, Impulse Excitation

Applicability and Limits: The requirements are applicable to all electrical cables interfacing with EUT enclosures. The basic concern is to protect equipment from fast rise and fall time transients that may be present due to platform switching operations and external transient environments such as lightning and electromagnetic pulse. The requirement is intended to replace "chattering relay" type requirements commonly used in procurements of equipment for aircraft applications in the past. The chattering relay has been criticised as unscientific and non-repeatable. The NCS08 requirement has a defined waveform and a repeatable coupling mechanism.

The 2 nanosecond rise time is consistent with rise times possible for the waveforms created by inductive devices interrupted by switching actions. The 30 nanosecond pulse width standardises the energy in individual pulses. In addition, it separates the rising and falling portions of the pulse so that each may act independently. Also, each portion may affect different circuits. The 5 ampere amplitude (500 V across 100 Ω loop impedance calibration fixture) covers most induced levels that have been observed during system-level testing of aircraft to transient environments. The 30 Hz pulse rate is specified to ensure that a sufficient number of pulses are applied to provide confidence that the equipment will not be upset.

Many circuit interfaces are configured such that potential upset is possible for only a small percentage of the total equipment operating time. For example, a microprocessor may sequentially poll various ports for input information. A particular port may continuously update information between polling intervals. If the transient occurs at the time the port is accessed, an upset condition may result. At other times, no effect may occur.

Possible tailoring by the procuring activity for contractual documents is lowering or raising the required amplitude based on the expected transient environments in the platform. Another option is to adjust the pulse width based on a particular environment onboard a platform or for control of the energy content of the pulse.

Test Procedures: The excitation waveform from the generator is a trapezoidal pulse. The actual waveform on the interconnecting cable will be dependent on natural resonance conditions associated with the cable and EUT interface circuit parameters.

A circuit diagram of the 50 Ω, charged line, pulse generator required by NCS08 is shown in **Figure 501-23**. Its operation is essentially the same as impulse generators used to calibrate measurement receivers except that the pulse width is much longer. A direct current power supply is used to charge the capacitance of an open-circuited 50 Ω coaxial line. The high voltage relay is then

switched to the output coaxial line to produce the pulse. The pulse width is dependent upon the length of the charge line. The relay needs to have bounce-free contact operation.

The calibration fixture with terminations is a 50 Ω transmission line. Since the injection probe is around the centre conductor within the fixture, a signal is being induced in the loop formed by the centre conductor, the two 50 Ω loads, and the structure of the fixture to which the 50 Ω loads are terminated. From a loop circuit standpoint, the two 50 Ω loads are in series, providing a total loop impedance of 100 Ω. Because of the transmission line configuration, inductance effects are minimised. Measurement of induced current levels is performed by measuring a corresponding voltage across one of the 50 Ω loads. Since the 50 Ω loads are in series for the induced signal, the total drive voltage is actually two times that being measured.

Clause 28.3.4b(3) of Test Method NCS08 requires verification that the rise time, fall time, and pulse width portions of the applied waveform are present in the observed waveform induced in the calibration fixture. **Figure 501-24** shows a typical waveform that will be present. Since the frequency response of injection probes falls off at lower frequencies, the trapezoidal pulse supplied to the probe sags in the middle portion of the pulse that is associated with the lower frequency content of the applied signal. The relevant parameters of the waveform are noted. It is critical that an injection probe be used with adequate response at higher frequencies to produce the required rise time and fall time characteristics.

As also specified in Test Method NCS07, testing is required on both entire power cables and power cables with the returns removed to evaluate common mode coupling to configurations, which may be present in different installations. In some installations, the power returns are routed with the high side wiring. In other installations, power returns are tied to system structure near the utilisation equipment with system structure being used as the power return path.

The chattering relay has been found to be effective for determining upset conditions of equipment. The basic concept was to electrically connect the relay coil in series with a normally closed contact and allow the relay to continuously interrupt itself. The wire between the coil and contact was used to couple the transient onto EUT cables. The greatest concern with the chattering relay is that it does not produce a repeatable waveform since an arcing process is involved. The particular relay being used and the condition of its contact and coil mechanics play a large role. NCS08 retains the most important characteristic of the chattering relay, which is the fast rise time waveform and also has the important advantage of a consistent excitation waveform.

The same calibration fixture used for Test Method NCS07 can be used for this test procedure. An available design is shown in **Figure 501-19**.

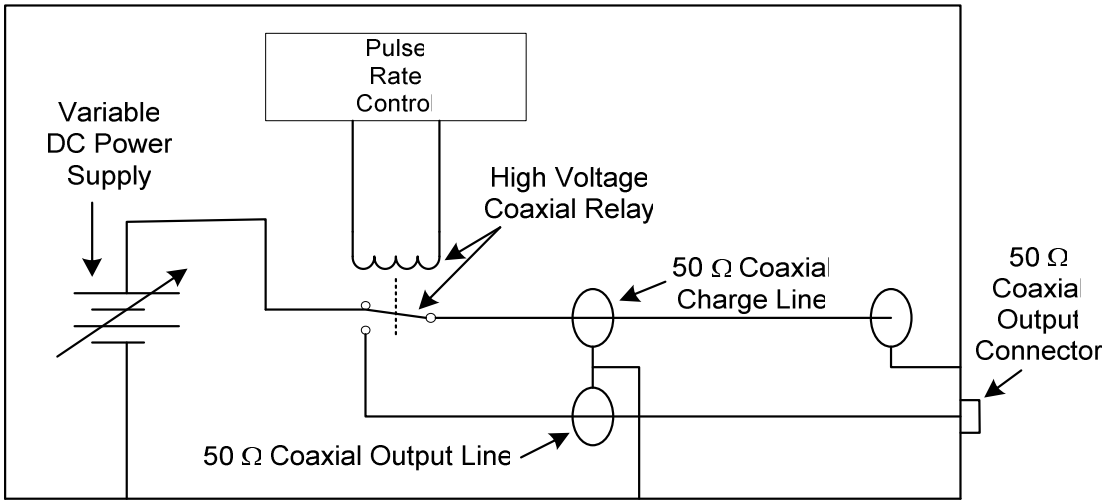

Figure 501-23 Circuit Diagram of NCS08 Pulse Generator

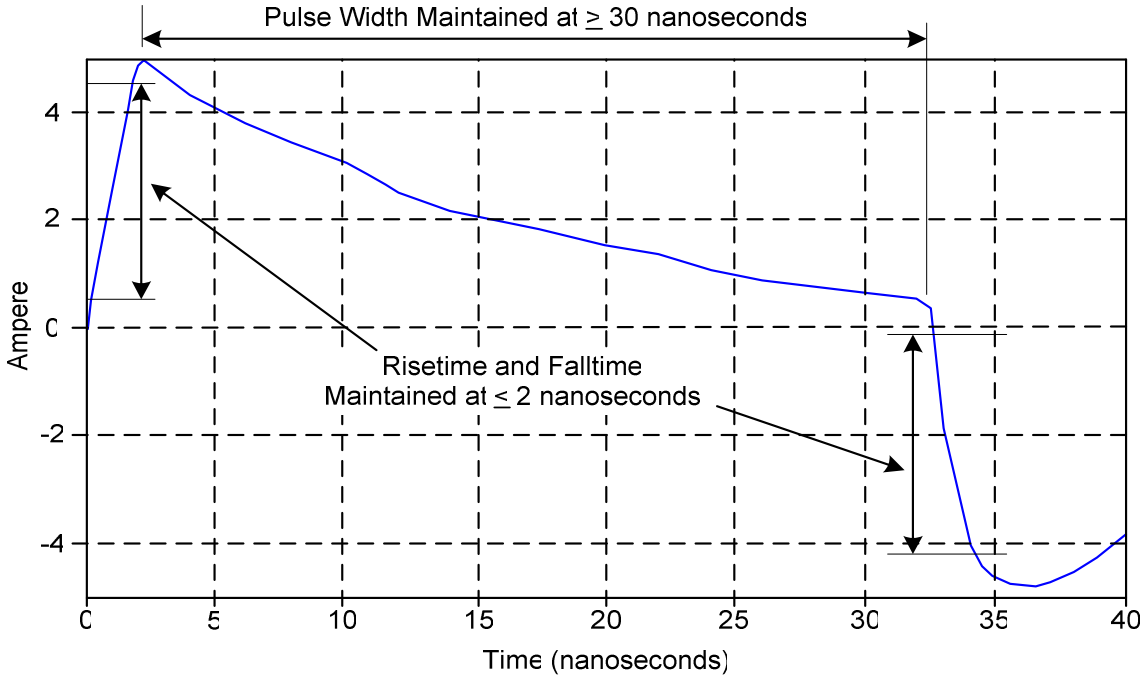

Figure 501-24 Typical NCS08 Calibration Fixture Waveform

6.17 NCS09, Conducted Susceptibility, Damped Sinusoid Transients, Cables and Power Leads 10 kHz to 100 MHz

Applicability and Limits: The requirements are applicable to all electrical cables interfacing with each EUT enclosure and also individually on each power lead. The basic concept is to simulate electrical current and voltage waveforms occurring in platforms from excitation of natural resonances.

In contrast to the NCS08 procedure that excites natural resonances, the intent of this requirement is to control the waveform as a damped sine. Damped sine waveforms (sometimes complex combinations) are a common occurrence on platforms from both external stimuli such as lightning and electromagnetic pulse and from platform electrical switching phenomena. Waveforms appearing on cables can be due to the cable itself resonating or to voltage and current drives resulting from other resonances on the platform. Wide frequency coverage is included to account for a wide range of conditions. Transients caused from switching actions within the platform can also result in similar waveforms.

A consideration for the requirement is whether momentary upsets are allowable if the EUT is capable of self-recovery to normal operation. Some upsets may occur that are not even noticed by an operator due to self-correcting mechanisms in the equipment. There may be cases where longer term upset is acceptable which may possibly require action by an operator to reset the equipment. The EMITP shall address any instances where the contractor proposes that observable upsets be accepted.

A limited set of damped sine waves is specified to address a sampling of the various ringing frequencies that may be present in the platform. An advantage of using a set of damped sine waves is that different circuit types are evaluated for various waveform attributes that may cause worst-case effects. Some circuits may respond to peak amplitude while others may respond to total energy or rate of rise.

The current limits are set at levels that cover most induced levels found in platforms during system-level testing to external transient environments. The level for aircraft also typically allows for designs that do not require the use of terminal protection devices. These items are generally undesirable due to concerns with hardness maintenance/hardness surveillance and the ability to assess whether

protection remains effective. The lower frequency breakpoints are at worst-case platform resonant frequencies below, which the response will fall off at 20 dB/decade. The upper frequency breakpoint is located where the spectral content of the transient environments falls off.

Possible tailoring of the requirements by the procuring activity in contractual documents is adjustment of the curve amplitude either higher or lower based on the degree of protection provided in the area of the platform where the equipment and interconnecting cabling will be located. A caution with this particular requirement based on past experiences is that the platform designer should be required to share in the burden of the hardening process by providing stress reduction measures in the platform. The equipment should not be expected to provide the total protection. Protection against transients generated internal to the platform needs to remain a consideration. Another potential tailoring area is adjusting the lower frequency breakpoint to be more consistent with the lowest resonance of a particular platform.

Test Procedures: The calibration fixture with terminations is a 50 Ω transmission line. Since the injection probe is around the centre conductor within the fixture, a signal is being induced in the loop formed by the centre conductor, the two 50 Ω loads, and the structure of the fixture to which the 50 Ω loads are terminated. From a loop circuit standpoint, the two 50 Ω loads are in series, providing a total loop impedance of 100 Ω. Because of the transmission line configuration, inductance effects are minimised. Measurement of induced current levels is performed by measuring a corresponding voltage across one of the 50 Ω loads. Since the 50 Ω loads are in series for the induced signal, the total drive voltage is actually two times that being measured.

NCS09 addresses testing of cables (interconnecting including power) and individual power leads. The common mode cable portion of the test is the best simulation of the type of condition present on platforms from electromagnetic field excitation. The individual power lead test addresses differential type signals present on platforms from switching functions occurring in the power system.

As necessary, the test can be applied in a straightforward manner to wires on individual pins on an EUT connector or to individual circuits (twisted pairs, coaxial cables, and so forth).

Since the quality factor (Q) of the damped sine signal results in both positive and negative peaks of significant value regardless of the polarity of the first peak, there is no requirement to switch the polarity of the injected signal.

The common mode injection technique used in this procedure and other procedures such as NCS07 is a partial simulation of the actual coupling mechanism on platforms. The magnetic field in the injection device is present at the physical location of the core of the injection device. In the platform, the electromagnetic field will be distributed in space. The injection probe induces a voltage in the circuit loops present with the voltage dropping and current flowing based on impedances present in the loop. There is a complex coupling relationship among the various individual circuits within the cable bundle. The injection probe is required to be close to the EUT connector for standardisation reasons to minimise variations particularly for higher frequencies where the shorter wavelengths could affect current distribution.

Caution needs to be exercised to ensure that attenuators and current injection probes are rated such that they will not be damaged or have their characteristics altered by the injected signals. Attenuators are generally rated in terms of their ability to handle average power. The peak power and associated voltages with the injected can damage attenuators. For example, the 10 A current limit for NCS09 exposes the attenuator to 500 V (10 A x 50 Ω) levels, which corresponds to a peak power of 5 kW ((500 V)2/50 Ω). Similarly, current injection probes can have their magnetic properties altered by the pulsed signals.

For measurement of Q of the injected waveform, **Figure NCS09-1** in Test Method NCS09 specifies the use of the peak of the first half-sine wave and the associated peak closest to being 50% down in amplitude. Some facilities use a damped cosine waveform rather than a damped sine. Since this waveform is more severe than the damped sine because of the fast rise time on the leading edge, there is no prohibition from using it. Because of potential distortion caused by leading edge effects, the first peak should not be used to determine Q for damped cosine waveforms. The next half peak

(negative going) should be used together with the associated negative peak closest to 50% down. Equipment may exhibit failures with this waveform that would not be present with the damped sine.

6.18 NCS10, Conducted Susceptibility, Imported Lightning Transient (Aircraft)

Applicability and Limits: This test is applicable to aircraft equipment, which may be considered flight safety critical for aircraft operation. A direct lighting strike to an aircraft will result in electrical transients induced on equipment wiring, including equipment ground bonding straps. Other types of equipment shall be considered with regard to their function and vulnerability.

This test method requires the application of idealised waveforms to verify that the equipment is capable of withstanding the effects of lightning induced transients. The criteria for equipment performance while being subjected to lightning transients shall be defined in terms of equipment function and criticality. Flight safety critical systems are required to continue to function without manual intervention after the application of a lightning transient.

This test may not cover all aspects of lightning induced transients and interaction effects on equipment, particularly when incorporated into a system. Additional tests such as simultaneous cable bundle injection, multiple stroke/multiple burst and/or multiple frequencies may be required to achieve equipment qualification. Because there is a close connection between the design requirements for protection against lightning Group Indirect Effects (GIE) and those covering EMC and Nuclear Electromagnetic Pulse (NEMP) considerations, the Lightning Protection Plan (LPP) shall take account of EMC Requirements, and also of NEMP requirements if applicable. Lightning requirements shall be co-ordinated with these other requirements and any conflict of requirements in particular instances shall be noted in the Risk Assessment and proposals included for resolving the conflict.

There are various coupling modes between the lightning current or fields and the internal wiring, each of which tends to produce a transient of a particular waveform. Thus the total transient may be a complex composite of several waveforms, and transient testing of equipment needs to include a variety of voltage and current waveforms selected to cover the principal coupling modes. The purpose of such tests is to determine whether the equipment can experience a given level of transient (of representative waveform) without damage or functional upset.

The test levels applied to equipment are derived from the locations and positions of the installed equipment. The maximum amplitudes for the test waveforms are chosen according to equipment categories A-D (electromagnetic (EM) environments of the equipment) and E (criticality of equipment).

CAT A Equipment and cabling installed in a protected EM environment such as a completely enclosed compartment in metallic materiel.

CAT B Equipment and cabling installed in a partially exposed EM environment such as below a dielectric cover in a largely metallic structure.

CAT C Equipment and cabling bonded to the same part of the materiel structure and installed in an exposed EM environment where large portions of the structure are constructed from poorly conducting or carbon fibre composite (CFC) materials.

CAT D Equipment and cabling bonded on different parts of the materiel structure and installed in an exposed EM environment where large portions of the structure are constructed from poorly conducting materials or CFC.

Where equipment and cables can be defined in more than one of the above categories, the test levels associated with the more severe environment shall be applied.

For test purposes, four waveform shapes have been selected as representative of the range of waveforms that occurs in practice. Different cable bundles will experience different amplitudes of transients depending on their location and construction (for example, with or without shielding) so a range of test amplitudes (levels) will also be required together with Equipment Installation Categories.

When Computed Transient Levels (CTLs) are not known the limits given in NCS10 shall be used,

i.e. A current limit of 30 A from 0.5 to 30 MHz decreasing to 15 A at 50 MHz.

A voltage limit of 3 kV between 0.5 and 30 MHz decreasing to 1.5 kV at 50 MHz.

A kVA limit of 30 kVA between 0.5 and 30 MHz decreasing to 7.5 kVA at 50 MHz.

Test Procedures: Equipment test methods are based on the Damped Sinewave testing (NCS09). Two main types of waveform are employed, as follows: -

a. Unidirectional pulses, having decay times considerably longer than their rise times, and whose shape is related to that of the lightning current waveform. These are sometimes known as forced transients because they are 'driven' by the lightning waveform.

b. Bursts of damped sinusoidal oscillations. These are shock-excited oscillations corresponding to the natural electrical resonances of the aircraft and its electrical systems. They are free or natural oscillations, whose frequency and degree of damping are independent of the lightning current waveform, although their amplitude will depend on the shape and amplitude of the shock (the lightning waveform) that triggers them off.

The following is a general guide with respect to the test procedures that shall be followed:

The EUT shall be switched on and exercised to ensure that it is operating in accordance with the EMITP. The pulse generator output would be increased from zero up to the test limit in steps not exceeding 10% of the required test limit or greater if the EMITP stipulates. Application of at least 3 transients at each incremental step, with a delay of at least 8 seconds between each to allow protection components time to recover.

If a malfunction occurs, record the applied peak current and voltage levels.

If no malfunction occurs, increase the generator output, until the peak current or peak voltage test limits, is reached and then apply 10 transients at this level, separated by at least 8 seconds, over a period of not more than 2 minutes. Record a typical set of the current and voltage waveforms that appear between the equipment case and ground.

Repeat the above procedure for both positive and negative polarity pulses.

Application of Test Waveforms

The Short Pulse (SP) waveform shall be applied to all EUTs. If it is known that a, particular equipment is intended to be installed in an aircraft with a well bonded, low impedance, largely metallic structure then the Intermediate Pulse (IP) waveform shall be applied in addition to the SP. For equipment that is intended to be installed in largely CFC airframes or equipment whose interconnecting wiring is run in areas covered by CFC panels then the Long Pulse (LP) waveform shall be applied in place of the IP. If it is not known where the equipment is to be installed then guidance should be sought from the relevant procuring agencies.

Selection of Transient Test Frequencies

During injection tests, transients shall be injected at frequencies according to the following criteria.

a. The most susceptible frequencies in the range 0.5 to 50 MHz found from any previous continuous wave (CW) bulk current injection EMC testing; or

b. The frequencies at which maxima and minima cable impedances occurs.

Over the frequency range 0.5 to 50 MHz inclusive not less than 50 frequencies such that any resonance's in the EUT internal circuitry are excited, so subjecting any active or passive devices to maximum voltage or current threat. These frequencies shall be spaced evenly with a logarithmic increment. The approximate frequency of each injection is obtained by the use of the following equation: -

Test frequency (MHz) = $10(0.3 + 0.028k)$

Where k = 0, 1, 2, 3 to 50 for 50 frequencies

6.19 NCS11, Conducted Susceptibility, Low Frequency Power Leads (Sea Systems)

Applicability and Limits: The purpose of this test is to confirm that the EUT will withstand imported low frequency transients imposed upon its power supply lines, This test simulates the effect of voltage transients observed due to switching of machines and other loads on ship and submarine power supply systems.

This test is applicable to all equipment in use in the Sea Systems environment connected to ship and submarine power supplies. The test subjects the EUT to high-energy transients, typically 6 Joules for the 750V limit and 18 Joules for the 2500V limit. In common with other transient tests the test relies on the attenuation effect of the power input filter to protect the EUT but it also exercises transient suppressors (if present) by applying levels above their clamping voltage. In addition determining EUT susceptibility the test assesses the robustness of the input filter, which if damaged by high-energy transients could lead to higher emission levels and reduced protection against all forms of susceptibility. Typical occurrences of filter damage are capacitor dielectric breakdown or damage to transient suppressors of insufficient rating. Positive-going and negative-going, damped sinewave transients between 10 to 16 kHz, are to be applied to individual supply leads of an, EUT, for both AC and DC incoming supplies. Battery operated equipment which may be connected to a platform supply, for example, during battery charging, shall also be subjected to this test.

The limits for this test have been derived from empirical measurements made of typical transients on DC and AC supplies.

Test Procedures: The transient generator shall be connected in series with the supply lead under test. The EUT shall be checked for correct function and operation prior to the application of the test transients.

Each supply lead in turn shall then be subjected to twelve positive-going applications of the transient using the generator output settings appropriate to the EUT supply voltage followed by twelve negative-going transients. These transients shall be applied at a rate of one every 2 to 5 seconds.

The generator output waveform shall be monitored on the oscilloscope. The voltage induced into the cable under test and oscillograms of the induced transient waveform may be recorded for inclusion in the test report.

During each transient application, the EUT shall be monitored for degradation of performance, damage or malfunction as defined in the EMITP. When testing digital systems it may be necessary to apply a greater number of transients to ensure detection of any malfunction. In this case, the EMITP shall include some guidance to ensure capture of a malfunction during test.

6.20 NCS12, Conducted Susceptibility Electrostatic Discharge

Applicability and Limits: The purpose of this test is to establish a common and reproducible basis for evaluating the performance of electrical and electronic equipment when subjected to electrostatic discharges. In addition, it includes electrostatic discharges, which may occur from personnel to objects near vital equipment.

It is not intended to specify the tests to be applied to a particular apparatus or system. The main aim is to give a general basic reference. The procuring agency or users of the equipment, remain responsible for the appropriate choice of test and the severity level to be applied to the EUT.

In service, electrostatic discharges result from charges built up by friction between materials, such as clothing, and inadvertently transferred to equipment by personnel, either directly or indirectly

This test applies to all Air equipment fitted with electronic and active components, particularly non-linear items such as transistors or integrated circuits etc, and Land and Sea Systems equipment if operated in an air-conditioned or protected environment.

The test method is similar to that described in BS EN 61000-4-2: 1995 Ref [17] but the following differences should be noted:

a. The applied levels and equipment classifications from this document should be used instead of those given in Ref [17].

b. The contact discharge method shall be used wherever possible but the rounded discharge tip described within the test method shall be substituted for that shown in Ref [17].

c. When the air discharge method is used on non-conducting surfaces an additional test level of 15 kV shall be applied to all test points.

Discharges are normally directed to points on the front panel of the EUT, e.g. keyboards, knobs, switches, buttons and indicators, LEDs, slots, grilles, connectors and any metallic parts on the outside of the EUT electrically isolated from ground, specific points shall be detailed in the EMITP. Equipment shall withstand discharges as specified above at charging voltages appropriate to the Category of the equipment, without malfunction or disturbance.

For Air service the tests shall be applied at one of two severity levels, depending on the category of the equipment:

a. Category A Safety Critical in that the safety of personnel or third parties is placed at risk either directly or indirectly from malfunctioning of the equipment (and hence subsequently the materiel).

b. Category B Mission Critical in that malfunctioning or upset of the equipment functions either reduces damages or prevents the materiel from performing its mission.

ESD testing of Air service equipment not in either of these categories is not normally required but is at the discretion of the Procuring Agencies.

Note 1: Calibration of the ESD generator would normally be performed by an external calibration laboratory however the test laboratory is responsible for verifying the ESD waveform prior to application of the test.

Note 2: For the testing of Munitions the test levels and methods in Ref [6] and leaflet 2 of Ref [4] shall be applied.

Test Procedures: The ESD generator is intended to simulate the current pulse, which arises when a person carrying an electric charge dissipates that charge on contact with the EUT. The characteristics of the ESD generator used are shown in Test Method NCS12. Ref [17] should be consulted for the constructional details of the test target used during verification of the ESD waveform.

6.21 NCS13, Conducted Susceptibility, Transient Power Leads

Applicability and Limits: The requirement is applicable to power input leads on surface ships and submarines that obtain power from the platform's primary power source that are not part of the EUT. There is no requirement on power output leads. The primary concern is to ensure that equipment performance is not degraded from voltage transients experienced on shipboard power systems coupling to interface wiring inside enclosures.

Electrical transients occur on all electrical distribution systems and can cause problems in circuitry which tend to be sensitive to voltage transients, such as latching circuits expecting a single trigger signal. On submarines and surface ships, these transients can be caused by switching of inductive loads, circuit breaker (or relay) bounce, and load feedback onto the power distribution system.

The 400 V peak 5 μs pulse defined in **Figure NCS13-1** is a suitable representation of the typical transient observed on Navy platforms. Measurements of transients on Navy platforms have shown the transient durations (widths) are predominantly in the 1 – 10 μs range. The large majority (> 90%) of the transients measured on both the 115 V and 440 V ac power distribution systems were between 50 and 500 V peak.

The Navy submarine community have found this test method to be effective to minimize the risk of transient-related equipment and subsystem susceptibility. It has been successful in early identification of transient related EMI problems in naval equipment and subsystems. Navy surface ships are using this test method for commonality in the ship community.

Test Procedures: Since the applied transient is coupled in series, Kirchhoff's voltage law states that the voltage appearing across the transient generator output terminals must drop around the circuit loop formed by the EUT input and the power source impedance. The transient voltage level specified in the limit is measured across the EUT input because part of the induced voltage can be expected to drop across the source impedance. A 10 µF capacitor is added across the power source to reduce the voltage drop across the power source impedance.

Calibration of the transient generator is performed utilizing a 5 Ω, non-inductive resistor. The NCS13 requirement is met by either the transient signal level, as measured across the EUT power input, being reached on the power lead or the transient generator calibration set point being obtained, whichever occurs first.

Figure NCS13-1 is a nominal representation of the spike as measured across the 5 Ω, non-inductive resistor. Characteristics of the waveform can vary by make and model of the generator employed; particularly the sag or undershoot. The shape of the sag or undershoot is not critical provided the maximum sag voltage and duration are not exceeded.

If the return side of power is not connected to the shielded room ground, the oscilloscope may need to be electrically "floated" using an isolation transformer to correctly measure the injected voltage resulting in a potential shock hazard. Differential probe amplifiers for oscilloscopes are available which will convert a differential measurement between the high side and an isolated ground to a single-ended measurement where the measurement device can be grounded. In lieu of an AC powered oscilloscope "floated" using an isolation transformer, a battery powered oscilloscope can be used. The battery powered oscilloscope will eliminate the electrical shorting possibility while using a "floating" oscilloscope.

The 400 V requirement calibrated across a 5 Ω resistive load produces 80 A in the resistor. When applied to an, EUT with a, low source impedance, currents greater than 280 A are available from the specified transient generator with a source impedance ≤ 2.0 Ω. Energy levels can be substantial.

6.22 NRE01, Radiated Emissions, Magnetic Field, 30 Hz to 100 kHz

Applicability and Limits: This requirement is specialised and is intended primarily to control magnetic fields for applications where equipment is present in the installation, which is potentially sensitive to magnetic induction at lower frequencies. The most common example is a tuned receiver that operates within the frequency range of the test.

NRS01 is a complimentary requirement imposed on equipment to ensure compatibility with the anticipated magnetic fields. The NRS01 limits are higher to allow for variations in performance between manufactured items and to account for the possibility that the emissions from the EUT may couple into a larger physical area than that evaluated under the NRS01 test procedures.

The Sea NRE01 limit is based on preventing induction of more than 0.5 µV (nominal) in an RG-264A/U transmission line (loop area, A, of 16 square mm), with a maximum induced level of 4 µV at 60 Hz. The need to limit the low frequency magnetic field emissions from equipment is due to the close proximity of electronic and electrical systems and associated cables installed on the Navy platforms, and the essentiality of low frequency sensors and systems. The primary concerns are potential effects to low frequency acoustic systems and sensors, and ELF and VLF/LF communications systems and sensors that have sensitivities in the nV range.

Note that the limit does not take into account magnetic effects from equipment such as magnetic launchers, magnetic guns and the like.

An estimate can be made of the types of induced levels that will result in circuitry from the limits. Magnetic fields act by inducing voltages into loop areas in accordance with Faraday's law ($V = -d\phi/dt$). For a uniform magnetic field perpendicular to the loop area, the induced voltage from Faraday's law reduces to $V = -2\pi fBA$.

f = Frequency of Interest B = Magnetic Flux Density A = Loop Area

The Land NRE01 limit is based on preventing induction of more than 2.5 mV (5 mV for NRS01) in a 12.7 cm diameter loop. Since magnetic induction is proportional to frequency and the limit falls off at 20 dB/decade, the induced voltage in a given loop area is constant. Since the Land limit is greater than or equal to the Sea limit at all frequencies, this induced level represents the worst-case. The primary concerns are potential effects to engine, flight and weapon turret control systems and sensors that have sensitivities in the mV range.

There are certain limited applications for Air where an NRE01 requirement needs to be considered. These applications are primarily when a subsystem will be installed in an aircraft in close proximity to an antenna connected to a VLF/LF receiver. An appropriate limit needs to be chosen based upon distances between the equipment and the antenna.

For Land applications, possible tailoring is increasing the limit for single-use equipment that will be located a sufficient distance from any potentially susceptible systems or waiving of the requirement.

Test Procedures: A 13.3 cm loop is specified for the test.

If the maximum level is always observed on one face or on one cable at all frequencies, then data only needs to be recorded for that face or cable.

Typical points of magnetic field emissions leakage from EUT enclosures are CRT yokes, transformers and switching power supplies.

A possible alternative measurement tool in this frequency range is wave analyser using a Fast Fourier Transform algorithm. Use of this type of instrumentation requires specific approval by the procuring activity.

A correction factor curve to convert from the voltage indicated by the measurement receiver to the magnetic field in dBpT is required. Manufacturers use different construction techniques that cause the actual factor to vary somewhat. Where traceable calibration figures are not available it is necessary to use the manufacturers' supplied data.

Measurements are now required for each point of maximum radiation which exceeds the NRE101 limit at 7 cm. These measurements are performed by increasing the measurement distance until the emission falls below the specified limit. The fall-off measurement data is intended to assist the equipment designer in determining the source of the magnetic field emissions and in the development of appropriate mitigation techniques. It should be noted the EUT is required to comply with the applicable NRE101 limit at 7cm; this is not a change to the NRE101 limit or measurement distance.

6.23 NRE02, Radiated Emissions, Electric Field, 10 kHz to 18 GHz

Applicability and Limits: The requirements are applicable to electric field emissions from the EUT and associated cables. The basic intent of the requirement is to protect sensitive receivers from interference coupled through the antennas associated with the receiver. Many tuned receivers have sensitivities on the order of 1 μV and are connected to an intentional aperture (the antenna), which are constructed for efficient reception of energy in the operating range of the receiver. The potential for degradation requires relatively stringent requirements to prevent platform problems.

There is no implied relationship between this requirement and NRS02 that addresses radiated susceptibility to electric fields. Attempts have been made quite frequently in the past to compare electric field radiated emission and susceptibility type requirements as a justification for deviations and waivers. While NRE02 is concerned with potential effects with antenna-connected receivers, NRS02 simulates fields resulting from antenna-connected transmitters.

Often, the same equipment item will be involved in influencing both requirements. A 30 watt VHF-AM radio with a typical blade antenna operating at 150 MHz can easily detect a 40 dBμV/m electric field (approximately -81 dBm developed at receiver input) while in the receive mode. When this same piece of equipment transmits at the same 150 MHz frequency, it will produce a field of approximately 150 dBμV/m (32 V/m), at a 1 metre distance. The two field levels are 110 dB apart.

The limit curves are based on experience with platform-level problems with antenna-connected receivers and the amount of shielding typically between antennas and equipment and associated

wiring. The limit for surface ships both topside and below decks is based on numerous documented incidents of case and cable radiation coupling to receiver antennas and sensitive systems. The use of hand-held type transceivers below deck within a ship is increasing and can be plagued by excessive levels of interference below deck. The below deck limit is comparable to many commercial / international standards.

For submarines, the NRE02 limit distinguishes between equipment located internal versus external to the pressure hull. For equipment located external to the pressure hull, stricter limits are imposed. Possible tailoring is to apply the external NRE02 requirement only to equipment that is located above the waterline.

The limit curves for equipment in internal installations on fixed wing aircraft are placed for air vehicles that are not designed to have intentionally shielded volumes that are effective across the frequency range of the test. Some minimal shielding is present. The curve for equipment in external installations and helicopters is 10 dB more stringent because even this minimal shielding is not available.

These limits for the 30 to 400 MHz band, in particular, have been validated as being properly placed. It has become standard practice on some aircraft programs to use spectral analysis equipment wired to aircraft antennas to assess degradation due to radiated emissions from onboard equipment. Many problems due to out-of-limit conditions in this band have been demonstrated. It has also been determined that equipment meeting the limit generally does not cause problems. Most of this experience is on fighter size aircraft. The 20 dB/decade increase in the limit above 100 MHz is due to the aperture size of a tuned antenna ($G\lambda 2/(4\pi)$) decreasing with frequency. The coupled power level from an isotropic tuned antenna will remain constant. The curve breaks at 100 MHz because of difficulty with maintaining a tuned antenna due to increasing physical size and the lower likelihood of coupling to the antenna with longer wavelengths.

No limit is specified below 2 MHz for internal equipment on fixed-wing aircraft. There are antennas on some aircraft that operate below 2 MHz; however, these antennas are usually magnetic loops that have an electrostatic shield. These antennas have very short electrical lengths with respect to the wavelength of frequencies below 2 MHz and any electric field coupling will be inefficient.

In the past some Army EUTs have been found to be susceptible to ripple voltages when fitted to platforms and hence must be tested to avoid problems when subjected to low frequency radiated fields which can couple onto interconnecting cabling. Although relatively inefficient, coupling to cabling at lower frequencies has been demonstrated innumerable times in EMI testing.

The limits for all land based equipment cover the same frequency range, however a 20dB difference exists between equipment categorised as being a fixed installation for sea systems (such as that associated with a permanent shore emplacement) and a mobile sea system (such as a man portable device see ACETP 502 [Ref 18]). All equipment procured by the Army shall be tested to the more stringent limit while equipment procured for Air service deployed in a ground support role shall be tested in accordance with the requirements of AECTP 503 [Ref 19]. The 20 dB difference between the limits exists because of the general situations where the equipment is deployed. Mobile equipment is often very close to unprotected antennas such as installations in vehicles or tents or near physically small helicopter aircraft and therefore requires a harsher limit applied. The fixed sea systems and most air installations in a ground support role have less critical coupling situations with regard to antenna coupling.

Possible tailoring by the procuring activity for contractual documents is as follows. The limits could be adjusted based on the types of antenna-connected equipment on the platform and the degree of shielding present between the equipment, associated cabling, and the antennas. For example, substantial relaxation of the limit may be possible for equipment and associated cabling located totally within a shielded volume with known shielding characteristics. It may be desirable to tailor the frequency coverage of the limit to include only frequency bands where antenna-connected receivers are present. Some caution needs to be exercised in this regard since there is always the chance the equipment will be added in the future. For example, it is not uncommon to add communications equipment (such as HF radio) onboard an aircraft as different missions evolve.

Test Procedures: Specific antennas are required by this test procedure for standardisation reasons. The intent is to obtain consistent results between different test facilities.

In order for adequate signal levels to be available to drive the measurement receivers, physically large antennas are necessary. Due to shielded room measurements, the antennas are required to be relatively close to the EUT, and the radiated field is not uniform across the antenna aperture. For electric field measurements below several hundred megahertz, the antennas do not measure the true electric field.

The 104 cm rod antenna has a theoretical electrical length of 0.5 metres and is considered to be a short monopole with an infinite ground plane. It would produce the true electric field if a sufficiently large counterpoise were used to form an image of the rod in the ground plane. However, there is not adequate room. The requirement to bond the counterpoise to the shielded room or earth ground, as applicable, is intended to improve its performance as a ground plane. The biconical and double ridged horn antennas are calibrated using far-field assumptions at a 1 metre distance. This technique produces standardised readings. However, the true electric field is obtained only above approximately 1 GHz where a far field condition exists for practical purposes.

Antenna factors are determined using the procedures of [Ref 15] or other acceptable standards. They are used to convert the voltage at the measurement receiver to the field strength at the antenna. Any RF cable loss and attenuator values must be added to determine the total correction to be applied.

The double-ridged horn is considered to be the better antenna for standardisation. Other linearly polarised antennas such as log periodic can be used provided they are calibrated for their free-space Antenna Factors (AFfs), corrected to give E-field strength at a position in space 1 m in front of the EUT. The required corrections will vary according to the physical size and frequency coverage of the particular antenna. When the antenna is calibrated it is necessary to request that the AFfs is corrected to give the field strength at the tip of the antenna. This is due to field variations across the antenna apertures and far field/near field issues caused by measurements not made to the phase centre of the antenna.

The stub radiator required by the procedure is simply a short wire (approximately 10 cm) connected to the centre conductor of a coaxial cable that protrudes from the end of the cable.

There are two different mounting schemes for baluns of available 104 cm rod antennas with respect to the counterpoise. Some are designed to be mounted underneath the counterpoise while others are designed for top mounting. Either technique is acceptable provided the desired 0.5 metre electrical length is achieved with the mounting scheme.

The 10 pF capacitor used with the rod antenna in **Clause 29.3.4.c(3)** of Method NRE02 as part of the system check simulates the capacitance of the rod element to the outside world. With the rod antenna, the electric field present induces a voltage in the rod that is applied to the balun circuitry. One of the functions of the balun is to convert the high impedance input of the antenna element to the 50 Ω impedance of the measurement receiver. The 10 pF capacitor ensures that the correct source impedance is present during the check. Some antennas have a 10 pF capacitor built into the rod balun for calibration purposes and some require that an external capacitor be used.

For measurement system checks, establishing the correct voltage at the input to the 10 pF capacitor can be confusing dependent upon the design of the antenna and the associated accessories. Since, the electrical length of the 104 cm rod is 0.5 metres, the conversion factor for the induced voltage at the input to the 10 pF capacitor is 6 dB/m. If the limit at the measurement system check frequency is 34 dBμV/m, the required field level to use for measurement system check is 6 dB less than this value or 28 dBμV/m. The voltage level that must be injected is:

$$28\ \text{dB}\mu\text{V/m} - 6\ \text{dB/m} = 22\ \text{dB}\mu\text{V}$$

Since the input impedance at the 10 pF capacitor is very high, a signal source must be loaded with a 50 Ω (termination load or measurement receiver) to ensure that the correct voltage is applied. A "tee" connection can be used with the signal source connected to the first leg, the 50 Ω load connected to the second leg, and the centre conductor of the third leg connected to the 10 pF capacitor (barrel referenced to the balun case). Sometimes a feed-through accessory that acts as a voltage divider is supplied with a rod antenna for the purpose of determining antenna factors. The accessory usually includes the required 10 pF capacitor inside the accessory. If the accessory is used for injecting the measurement system check signal, caution needs to be observed. Since the accessory is intended for only determining antenna factors, the procedures provided with these accessories may not address the actual voltage that appears at the 10 pF capacitor. The design of the accessory needs to be reviewed to determine that the correct voltage is obtained. For a common design, the voltage at the capacitor is 14.6 dB less than the signal source level and 5.0 dB greater than the indication on the measurement receiver.

The antenna positioning requirements in this procedure are based on likely points of radiation and antenna patterns. At frequencies below several hundred MHz, radiation is most likely to originate from EUT cabling. The 104 cm rod and biconical antennas have wide pattern coverage. The equation in **Figure NRE02-7** in Test Method NRE02 is based on the rod and biconical being placed at least every 3 metres along the test set-up boundary. The double ridge horns have narrower beamwidths. However, the shorter wavelengths above 200 MHz will result in radiation from EUT apertures and portions of cabling close to EUT interfaces. The requirements for antenna positioning above 200 MHz are based on including EUT apertures and lengths of cabling at least one quarter wavelength.

All the specified antennas are linearly polarised. Above 30 MHz, measurements must be performed to measure both horizontal and vertical components of the radiated field. Measurements with the 104 cm rod are performed only for vertical polarisation. This antenna configuration is not readily adapted for horizontal measurements.

For equipment or subsystems that have enclosures or cabling in various parts of a platform, data may need to be taken for more than one configuration. For example, in an aircraft installation where a pod is located outside of aircraft structure and its associated cabling is internal to structure two different limits may be applicable. Different sets of data may need to be generated to isolate different emissions from the pod housing and from cabling. The non-relevant portion of the equipment would need to be protected with appropriate shielding during each evaluation.

6.24 NRE03, Radiated Emissions, Antenna Spurious and Harmonic Outputs, 10 kHz to 40 GHz

Applicability and Limits: The requirements are essentially identical with NCE03 for transmitters in the transmit mode. There are no requirements for receivers or transmitters in the standby mode. Most of the discussion under NCE03 (**Clause 6.6**) also applies to NRE03. A distinction between the requirements is that NRE03 testing includes effects due to antenna characteristics. The test itself is considerably more difficult.

Test Procedures: Since the test procedure measures emissions radiating from an antenna connected to a controlled impedance shielded transmission line, the measurement results should be largely independent of the test set-up configuration. Therefore, it is not necessary to maintain the basic test set-up described in the main body of this standard.

The test procedure is laborious and will require a large open area to meet antenna separation distances. Equations in the test procedure specify minimum acceptable antenna separations based on antenna size and operating frequency of the EUT. Antenna pattern searches in both azimuth and elevation are required at the spurious and harmonic emissions to maximise the level of the detected signal and account for antenna characteristics.

Sensitivity of the measurement system may need enhancement by use of preamplifiers and the entire test needs to be co-ordinated with local frequency allocation authorities. All recorded data has to be corrected for space loss and antenna gain before comparisons to the limit.

As shown in **Figures NRE03-1** and **NRE03-2**, shielding might be necessary around the measurement system and associated RF components to prevent the generation of spurious responses in the measurement receiver. The need for such shielding can be verified by comparing measurement runs with the input connector of the measurement receiver terminated in its characteristic impedance and with the EUT in both transmitting and stand-by modes or with the EUT turned off. Also, the receiving or transmit antenna may be replaced with a dummy load to determine if any significant effects are occurring through cable coupling.

The RF cable from the receive antenna to the measurement receiver should be kept as short as possible to minimise signal loss and signal pick-up.

The band-rejection filters and networks shown in **Figures NRE03-1** and **NRE03-2** are needed to block the transmitter fundamental and thus reduce the tendency of the measurement receiver to generate spurious responses or exhibit suppression effects because of the presence of strong out-of-band signals. These rejection networks and filters require calibration over the frequency range of test.

Some caution needs to be exercised in applying **Table 501-2**. In **Clause 30.3.4** of Method NRE03, a power monitor is used to measure the output power of the EUT. In conjunction with the antenna gain, this value is used to calculate the effective radiated power (ERP) of the equipment. In **Clause 30.3.4** of Test Method NRE03, the measurement receiver is used to measure the power from a receiving antenna. This result is also used to calculate an ERP. For the two measurements to be comparable, the measurement receiver bandwidth needs to be sufficiently large to include at least 90% of the power of the signal present at the tuned frequency. If the bandwidth in **Table 501-2** is not appropriate, a suitable measurement receiver bandwidth should be proposed in the EMITP.

For measurement of the magnitude of harmonic and spurious emissions with respect of the fundamental, the bandwidths of **Table 501-2** will normally produce acceptable results, regardless of whether the bandwidth is large enough to process 90% of the power. Since the signal bandwidth of harmonic and spurious emissions is usually the same as the fundamental, use of a common bandwidth for measuring both the fundamental and the emissions will provide a correct relative reading of the amplitudes.

6.25 NRS01, Radiated Susceptibility, Magnetic Fields, 30 Hz to 100 kHz

Applicability and Limits: This requirement is specialised and intended primarily to ensure that performance of equipment potentially sensitive to low frequency magnetic fields is not degraded. NRE01 is a complimentary requirement governing the radiated magnetic field emissions from equipment and subsystems. The NRE01 discussion is also applicable to this requirement.

The Sea NRS01 limit was established by measurement of magnetic field radiation from power distribution components (transformers and cables), and the magnetic field environment of Sea platforms. The Sea NRS01 limit from 30 Hz to 2 kHz was derived from the worst case magnetic field radiation from a power transformer (~170 dBpT) and applicable cable types (DSGU-400), and takes into account the user equipment power line harmonic content and maximum anticipated power consumption. The Sea NRS01 limit above 2 kHz is based on the measured magnetic field environment of Sea platforms.

Land has maintained the basic relationship of the NRS01 and NRE01 limits having the same shape. The NRS01 limit is based on 5 mV (independent of frequency) being induced in a 12.7 cm diameter loop.

Discussion: Laboratory tests have been performed to assess the possibility of using the 13.3 cm loop sensor specified in the NRE01 test procedure instead of the 4 cm loop sensor used in this test procedure to verify the radiated field. The testing revealed that the 13.3 cm loop sensor did not provide the desired result due to variation of the radiated field over the area of the loop sensor. Due to its smaller size, the 4 cm loop sensor provides an accurate measure of the field near the axis of the radiating loop. A correction factor curve to convert from the voltage indicated by the measurement receiver to the magnetic field in dBpT is required. Manufacturers use different construction techniques that cause the actual factor to vary somewhat. Where traceable calibration figures are not available it is necessary to use the manufacturers' supplied data.

Test Procedures: The primary test procedure requires that testing be performed at each electrical interface connector. On some small size EUTs, connectors may be closely spaced such that more than one connector can be effectively illuminated for a particular loop position. The EMITP shall address this circumstance.

Helmholtz coils generate a relatively uniform magnetic field that is more representative of the environment experienced on some platforms, particularly submarines. For this reason, the AC Helmholtz coil test option is preferred for submarine applications. In addition to providing a more realistic test bed, Helmholtz coils will, in general, reduce test time. Application of the guidelines and analytical expressions presented herein should enable users to design and construct Helmholtz coils for NRS01 testing.

AC Helmholtz coils may be designed in accordance with the following guidance.

1. A closed form solution for the magnetic flux density produced along the axis of a series-driven system of two identical circular coils is:

$$B_z = \frac{\mu_o NIr^2}{2}\left(\frac{1}{\left(z^2+r^2\right)^{3/2}} + \frac{1}{\left((d-z)^2+r^2\right)^{3/2}}\right)$$

where,

B_z = magnetic flux density, Teslas

μo = permeability of free space, Henrys/metre

N = number of turns (same for each coil)

I = current, Amperes

r = coil radius, metres

d = coil separation, metres

z = distance along common axis, metres

For a standard Helmholtz coil configuration, d = r.

At the centre of the test volume (z = r/2), the above expression can be simplified:

$$B_z \approx \frac{\left(8.99\times10^{-7}\right)N\,I}{r}$$

2. The coil impedance can be estimated using general expressions for an RL series circuit. The dominant term for frequencies below 100 kHz is the coil inductance that is the sum of each coil's series inductance (L) and the mutual inductance (M) between the two coils:

L_{Total} = 2(L + M)

Where:

M = $\alpha N^2 r$ α = 0.494 x 10^{-6} Henrys/metre

The series inductance can be estimated using the following expression for the external inductance of a circular coil where the wire bundle cross section is circular in shape and small relative to the coil radius:

$$L = N^2 r\mu_0\left[\ln\left(\frac{16r}{a}\right)-2\right]$$

Where: a = diameter of wire bundle cross section, metres

There are several practical limitations that must be considered when designing AC Helmholtz coils.

a. The coil drive current is limited by coil impedance. The dominant term in the coil impedance is the coil inductive reactance. Because it is proportional to the square of the number of turns (N), the coils should be designed with a minimum number of turns needed to meet the low frequency test limit. Depending on coil size, it may be necessary to construct the coils with one or more taps so the number of turns can be reduced at higher frequencies.

b. The coil self-resonant frequency must be greater than 100 kHz. At self-resonance, it may not be practical to generate sufficient drive current to achieve the test limit.

c. A series voltage drop will exist across each coil that is proportional to the product of the coil impedance and coil drive current. Because the voltage drops are separated in space by the distance between the coils, a voltage gradient will exist (electric field in V/m). This field is, maximum near the perimeter of circular coils. If the EUT is relatively small compared to the available test volume, this effect may not be a concern. However, if the EUT is near the coil perimeter, or if the electric field magnitude is significant relative to the NRS02 electric field susceptibility requirement, then steps should be taken to minimise the electric field.

It may not be practical using commonly available laboratory power amplifiers to achieve the NRS01 test limit for coils much larger than 1.22 metres in diameter. Consideration should be given to tailoring the test limit if a larger Helmholtz coil is used. For example, it may be proposed that the radiated test level exceed the limit by 3 dB, rather than the 6 dB required for Helmholtz coils. Any tailoring requires approval from the procuring activity.

Prior to initial use, the coils must be tested to ensure they are capable of generating the required magnetic flux densities from 30 Hz to 100 kHz. Sufficient margin (2 to 3 dB) should be available to compensate for the potential loading effect of nearby metallic structures or magnetic material. It must be confirmed that the first indication of self-resonance appears above the NRS01 upper frequency limit of 100 kHz. For frequencies above 10 kHz, the magnitude of the electric field component in the test volume should be determined either by direct measurement, or it should be approximated by measuring the voltage drop across the coils and dividing by coil separation distance. Unless the electric field component is much less than the NRS03 electric field susceptibility limit, the coils should be enclosed in a non-continuous electrostatic shield to prevent ambiguity when interpreting susceptibility test results.

6.26 NRS02, Radiated Susceptibility, Electric Field, 50 kHz to 40 GHz

Applicability and Limits: The requirements are applicable to both the EUT enclosures and EUT associated cabling. The basic concern is to ensure that equipment will operate without degradation in the presence of electromagnetic fields generated by antenna transmissions both onboard and external to the platform.

The EUT is subjected to lower frequency radiated fields (down to 50 kHz) to determine its vulnerability to emissions generated within the EUT's normal installation by other electronic/electrical components, such as those associated with switch mode power supplies.

There is no implied relationship between this requirement and NRE02. The NRE02 limit is placed primarily to protect antenna-connected receivers while NRS02 simulates fields resulting from antenna transmissions.

The limits specified for different platforms are simply based on levels expected to be encountered during the service life of the equipment. They do not necessarily represent the worst-case environment to which the equipment may be exposed. RF environments can be highly variable, particularly for emitters not located on the platform. The limits are placed at levels that are considered to be adequate to cover most situations, including design levels for "back door" effects (excluding direct coupling to platform antennas or externally mounted devices) resulting from RF high power threat emitters. The aircraft carrier hanger deck is not a totally enclosed area. Investigation of the electromagnetic environment in the aircraft carrier hangar deck on 9 aircraft carriers showed levels in the HF band (2 to

30 MHz) up to 42 V/m. Therefore, equipment located in the hanger deck is required to meet the same 50 V/m level as equipment in non-metallic ships (below decks) from 2 to 30 MHz..

In the past some EUTs have been found to be susceptible to ripple voltages when fitted to platforms and hence must be tested to avoid problems when subjected to low frequency radiated fields.

An example, which demonstrates the variability of environments for ground installations and the need for effective tailoring of requirements, is the installation of equipment in a large ground-based radar facility. Some of these facilities transmit power levels over one megawatt and the back lobes from the antennas can be substantial. Suitable design levels for equipment that will be used in the facility or nearby need to be imposed.

For aircraft and ships, different limits are specified depending on whether the equipment receives protection from platform structure. This distinction is not made for Land systems, such as tanks, because the same equipment used inside a structure is often used in other applications where protection is not available.

The 200 V/m, requirement for Aircraft is regardless of the location or criticality of the equipment. Portions of the external environment accepted for most Aircraft is higher than 200 V/m. Aircraft, especially rotary wing, have flight profiles that are almost exclusively nap-of-the-earth (NOE). The NOE profiles allow for much closer and longer duration, encounters with high power emitters. This approach is similar to the FAA approach that recommends that Visual Flight Rules (VFR) helicopters be qualified to levels higher than fixed wing aircraft.

For submarines, the NRS02 limit distinguishes between equipment located internal versus external to the pressure hull. For equipment installed internal to the pressure hull, 10 V/m is specified above 30 MHz to account for portable transmitters used with the submarine. For equipment located external to the pressure hull, stricter limits are imposed to more closely reflect the electromagnetic environment. The external NRS02 limits should be applied only to equipment that is required to be fully operational when located above the waterline. Separate limits are specified, which are less severe, for equipment that is “external” to the pressure hull but located with the submarine superstructure (metallic boundary).

Possible tailoring by the procuring activity for contractual documents is to modify the required levels and required frequency ranges based on the emitters on and near a particular installation. Actual field levels can be calculated from characteristics of the emitters, distances between the emitters and the equipment, and intervening shielding. Leaflet AECTP 258 in Ref [6] provides information on land, air, and sea based RF emitters, both hostile and friendly, which contribute to the overall electromagnetic environment. The possible use of the equipment in other installations and the potential addition or relocation of RF emitters needs to be considered. Other possible tailoring is to change from the standard 1 kHz, square wave modulation or use additional modulations based on actual platform environments.

NRS02 requirements for surface ships and submarines are included at the tuned frequency of antenna-connected receiver; there is no relaxation as for other platforms. The use of wireless devices such as radio frequency identification (RFID) tags, handheld transceivers, wireless local area network (WLAN), etc. is increasing rapidly for below decks applications. The requirement is to protect receivers at their tuned frequency, from the intentional emissions of wireless (RF generating) devices used in close proximity to the receiver when sufficient isolation is provided by the platform (for example, path loss from sea water between the emitter and receive antenna for submarines) such that the receiver’s antenna does not detect significant levels from wireless devices. The requirement is intended to ensure the equipment (receiver) does not respond to the electric fields generated internal to the structure and is not to restrict signals received via the antenna. The electric field strength at a distance of 1.0 m from a typical wireless device with an effective isotropic radiated power (EIRP) of 100 mW (typical of 802.11 wireless LAN access points, RFID, and wireless communications) is 1.73 V/m.

Note 1: The start frequency for this test maybe tailored by Nations as required.

Note2: Federal Communications Commission (FCC) rules defines power limitations for WLANs in FCC Part 15.247 and requires effective isotropic radiated power (EIRP) to be 1 W or less; this equates to an electric field strength of 5.5 V/m at a distance of 1 m. It should be noted that for fixed, point-to-point systems that use higher gain directive antennas an EIRP of 4.0 W is permitted by the FCC.

Test Procedures: Test facilities are permitted to select appropriate electric field generating apparatus. Any electric field generating device such as antenna, long wire, TEM cell, reverberating chamber (using mode tuned techniques) or parallel strip line capable of generating the required electric field may be used. Fields should be maintained as uniform as possible over the test set-up boundary. Above 30 MHz, both horizontally and vertically polarised fields must be generated. This requirement may limit the use of certain types of apparatus. Only vertically polarised measurements are required below 30 MHz due to the difficulty of orienting available test equipment for horizontal measurements.

Electric field sensors are located at least 30 cm above the ground plane below 1 GHz to minimize electromagnetic boundary conditions of the ground plane affecting the field that is present at the longer wavelengths. At and above 1 GHz, these effects are less pronounced and the volumes being illuminated by antennas that typically have higher gain are smaller. Therefore, the sensors need to be positioned in the main antenna beam and located at a height where the EUT is being radiated.

The requirement to ensure that the E-field sensor is displaying the fundamental frequency is primarily concerned with the biconical antenna, which has poor characteristics at the lower frequencies. Harmonics, which are down from the fundamental in power, may radiate higher levels than the fundamental due to the antenna being more efficient at the harmonic frequencies. The primary way to avoid this effect is to use a transmission line radiator or a physically larger transmit antenna at the lower frequencies (approximately below 70 MHz).

This edition of AECTP 501 allows larger distances than 1 meter between the transmit antenna and the EUT boundary. This approach is actually preferable, where amplifier power is available to obtain the required field, since more of the EUT is illuminated at one antenna position.

Monitoring requirements emphasise measuring true electric field. While emission testing for radiated electric fields does not always measure true electric field, sensors with adequate sensitivity are available for field levels generated for susceptibility testing. Physically small and electrically short sensors are required so that the electric field does not vary substantially over the pickup element resulting in the measurement of a localised field. Broadband sensors not requiring tuning are available.

The use of more than one sensor is acceptable provided all sensors are within the beamwidth of the transmit antenna. The effective field is determined by taking the average of the readings.

For example, if the readings of three sensors are 30, 22, and 35 V/m, the effective electric field level is:

$$(30 + 22 + 35)/3 = 29 \text{ V/m}.$$

Different sensors may use various techniques to measure the field. At frequencies where far-field conditions do not exist, sensors must be selected which have electric field sensing elements. Sensors that detect magnetic field or power density and convert to electric field are not acceptable. Under far-field conditions, all sensors will produce the same result. Correction factors must be applied for modulated test signals for equivalent peak detection as discussed under **Clause 4.3.10.1** of the document. A typical procedure for determining the correction factor for these sensors is as follows:

a. Generate a field at a selected frequency using an unmodulated source.

b. Adjust the field to obtain a reading on the sensor display near full scale and note the value.

c. Modulate the field as required (normally 1 kHz pulse, 50% duty cycle) and ensure the field has the same peak value. A measurement receiver with the peak detector selected and receiving antenna can be used to make this determination.

d. Note the reading on the sensor display.

e. Divide the first reading by the second reading to determine the correction factor (Subtract the two readings if the field is displayed in terms of dB).

f. Repeat the procedure at several frequencies to verify the consistency of the technique.

Above 1 GHz, radiated fields usually exhibit far-field characteristics for test purposes due to the size of typical transmit antennas, antenna patterns, and distances to the EUT. Therefore, a double-ridged horn together with a measurement receiver will provide true electric field. Similarly, the particular sensing element in an isotropic sensor is not critical, and acceptable conversions to electric field can be made.

For equipment or subsystems that have enclosures or cabling in various parts of a platform, data may need to be taken for more than one configuration. For example, in an aircraft installation where a pod is located outside of aircraft structure and its associated cabling is internal to structure two different limits may be applicable. Different sets of data may need to be generated to evaluate potential pod susceptibility due to coupling through the housing versus coupling from cabling. The non-relevant portion of the equipment would need to be protected with appropriate shielding.

Reverberating chambers, using mode-tuned techniques, have been popular for performing shielded effectiveness evaluations and, in some cases, have been used for radiated susceptibility testing of equipment and subsystems. The concept used in reverberating chambers is to excite available electromagnetic wave propagation modes to set up variable standing wave patterns in the chamber. A transmit antenna is used to launch an electromagnetic wave. An irregular shaped tuner is rotated to excite the different modes and modify the standing wave pattern in the chamber. Any physical location in the chamber will achieve same peak field strength at some position of the paddle wheel.

Reverberation chambers have the advantage of producing relatively higher fields than other techniques for a particular power input. Also, the orientation of EUT enclosures is less critical since the all portions of the EUT will be exposed to the same peak field at some paddle wheel position. The performance of a particular reverberation chamber is dependent upon a number of factors including dimensions Q of the chamber, number of available propagation modes, and frequency range of use.

Some issues with reverberation chambers are as follows:

a. The field polarisation and distribution with respect to the EUT layout are generally unknown at a point in time. If a problem is noted, the point of entry into the EUT may not be apparent.

b. Reverberation chambers are sometimes treated as a good tool to determine potential problem frequencies with conventional antenna procedures being used to evaluate areas of concern.

c. The performance of each chamber must be reviewed to determine the suitability of its use for reverberation testing over a particular frequency range.

Reverberation chambers should be constructed in accordance with the following guidance in order to function properly.

d. A tuner should be constructed of metal and installed with appropriate positioning equipment to allow the tuner to be rotated 360 degrees in at least 200 evenly spaced increments. The tuner should be constructed to be asymmetric with the smallest dimension of the tuner being at least $\lambda/3$ of lowest frequency to be tested and the longest dimension of the tuner being approximately 75% of the smallest chamber dimension.

e. The enclosure shall be free of any materials that might exhibit absorptive properties such as tables, chairs, wood floors, sub-floors, shelves, and such. Support structures should be constructed from high density foam.

f. Transmit and receive antennas should be at least 1.0 metre ($\lambda/3$ is the actual limitation) from any wall or object and should be positioned to prevent direct alignment between the main lobes of the two antennas or between the EUT and the main lobe of either antenna.

g. The lower frequency limit is dependent on chamber size. To determine the lower frequency limit for a given chamber, use one of the following methods:

    1. Using the following formula, determine the number of possible modes (N) which can exist at a given frequency. If, for a given frequency, N is less than 100 then the chamber should not be used at or below that frequency.

$$N = \frac{8\pi}{3} abd \frac{f^3}{c^3}$$

Where: a, b, and d are the chamber internal dimensions in metres

f is the operation frequency in Hz

c is the speed of propagation (3 x 108 m/s)

2. Use the methods detailed in Ref [7], Section 20.6, for determining the lowest useable frequency based on field uniformity.

h. In order to assure that the time response of the chamber is fast enough to accommodate pulsed waveform testing (other than the 1 kHz, 50% duty cycle, waveform specified), determination of the chamber time constant must be accomplished using the following procedure:

1. Calculate the chamber Q using:

$$Q = \left(\frac{16\pi^2 V}{\eta_{Tx}\eta_{Rx}\lambda^3} \right) \left(\frac{P_{ave\ rec}}{P_{forward}} \right)$$

Where: η_{Tx} and η_{Rx} are the antenna efficiency factors for the Tx and Rx antennas respectively and can be assumed to be 0.75 for a log periodic antenna and 0.9 for a horn antenna.

V is the chamber volume (m^3), λ is the free space wavelength (m) at the specific frequency.

$P_{ave\ rec}$ is the average received power over one tuner rotation.

$P_{forward}$ is the forward power input to the chamber over the tuner rotation at which $P_{ave\ rec}$ was measured.

2. Calculate the chamber time constant, τ, using:

$$\tau = \frac{Q}{2\pi f}$$

where Q is the value calculated above, and f is the frequency (Hz)

3. If the chamber time constant is greater than 0.4 of the pulse width of the modulation waveform, absorber material must be added to the chamber or the pulse width must be increased. If absorber material is added, repeat the measurement and the Q calculation until the time constant requirement is satisfied with the least possible absorber material. A new *CLF(f)* must be defined if absorber material is required.

i. Prior to using the chamber, the effectiveness of the tuner should be evaluated at the upper and lower frequencies to be used and at points between the endpoints not to exceed 1 GHz spacing. To evaluate the stirring effectiveness, inject a CW signal into the chamber at the desired frequency and record the net received power at 200 positions of the tuner evenly spaced over a 360 degree rotation of the tuner. Determine the correlation coefficient between the original set of received power and subsequent sets obtained by rotating the last data point of the original set to the position of the first point and then shifting all the other points to the right as depicted below.

Original data	D1, D2, D3, D4, D5, . . . D200
Shifted data (1)	D200, D1, D2, D3, D4, . . . D199
Shifted data (2)	D199, D200, D1, D2, D3, . . . D198
Shifted data (3)	D198, D199, D200, D1, D2, . . . D197
Shifted data (4)	D197, D198, D199, D200, D1, . . . D196
Shifted data (5)	D196, D197, D198, D199, D200, D1, . . . D195

The correlation coefficient should drop to below 0.36 within five shifts of the data. This will ensure that the tuner is operating properly. If the tuner fails this test, then the tuner needs to be made either larger or more complex, or both.

j. NBS Technical Note 1092 Refs [20] and NIST Technical Note 1508 [21] should be used as a guide in preparing a shielded room for reverberation measurements.

6.27 NRS03, Radiated Susceptibility, Transient, Electromagnetic Field

Applicability and Limits: This requirement is primarily intended for EUTs to withstand the fast rise time, free field transient environment of an electromagnetic pulse (EMP). It applies for equipment enclosures, which are directly exposed to the incident field outside of the platform structure or for equipment inside poorly shielded or unshielded platforms. This requirement may be tailored in adjustment of the curve amplitude either higher or lower based on degree of field enhancement or protection provided in the area of the platform where the equipment will be located. This requirement is applicable only for EUT enclosures. The electrical interface cabling should be protected in shielded conduit. Potential equipment responses due to cable coupling are controlled under NCS09.

Test Procedures: To protect the EUT and actual and simulated loads and signal equipment, all cabling should be treated with overall shielding; kept as short as possible within the test cell; and oriented to minimise coupling to the EMP fields.

The EMP field is simulated in the laboratory using bounded wave TEM radiators such as TEM cells and parallel plate transmission lines. To ensure the EUT does not significantly distort the field in the test volume, the largest EUT dimension should be no more than a third of the dimension between the radiating plates of the simulator. In these simulators the electric field is perpendicular to the surfaces of the radiator. Since the polarisation of the incident EMP field in the installation is not known the EUT must be tested in all orthogonal axes.

There is a requirement to first test at 10% of the specified limit and then increase the amplitude in steps of 2 or 3 until the specified limit is reached for several reasons. This test has the potential to burnout equipment and stating at lower levels provides a degree of protection. Also, the equipment may exhibit susceptibility problems at lower test levels that do not occur at higher test levels due to the presence of terminal protection devices (TPDs). At lower test levels, the devices might not actuate resulting in higher stresses on circuits than for higher levels where they do actuate.

Common mode signals can result on cables with inadequate isolation or leaky connectors in the presence of radiated fields. A method of checking for potential problems is as follows:

a. Measure the E-field with the B-dot or D-dot probe.

b. Invert the probe by rotating it 180 degrees.

c. Measure the E-field again and invert the signal.

d. Overlay and subtract the two signals.

e. The result is the common mode signal.

If any significant level is present, corrections to the set-up should be undertaken, such as tightening of connectors and introduction of additional isolation, such as better shielded cables, alternative routing, or shielding barriers.

6.28 NRS04, Radiated Susceptibility, Magnetic Field Susceptibility (DC)

Applicability and Limits: This requirement is specialised and intended primarily to ensure that performance of equipment potentially sensitive to DC magnetic fields is not degraded. EUTs may be required to operate in areas that are subjected to large fields either intentionally or unintentionally generated.

This requirement is performed to prove that equipment continues to function correctly on board a Ship where depermining and degaussing of the ship's hull takes place on a regular basis. It should be noted that the amount of field that the EUT will be subjected to will be dependant upon its location on the ship and the level applied should be adjusted accordingly, for this reason the procuring authority should define actual levels before testing commences.

If either Land or Air procuring authorities deploy EUTs in areas of high DC magnetic fields then it is unlikely that the specified level of 800 A/m is suitable for ensuring correct operation. The level applied shall be tailored to the actual environment that the EUT will be operating in.

This test procedure should be used when EUTs have components that are sensitive to magnetic fields such as CRTs, Hall effect circuitry, compasses or generating/sensing loops.

Test Procedures: A slewed DC magnetic field must be applied to all equipment operating on submarines and surface ships using the Helmholtz coil specified in NRS01.

This test should be applied to each axis of the EUT for a continuous time period to establish that the EUT has suffered no detrimental effects. The field should be increased up to the desired test level at a rate of 1600 A/m/s and then maintained at this level for at least 5 seconds before being allowed to decay back to 0 A/m. This process should be repeated a sufficient number of times to establish that the EUT has not been adversely effected. This process should then be repeated with the field in the opposite direction, this is accomplished by reversing the connections to the coil.

Care must be taken to keep the EUT in the uniform portion of the field produced within the centre of the coil. The area of uniform field is dependant upon the physical size of the Helmholtz coil being used and no EUT tested should have any dimension greater than 1.1 x the radius of that coil.

For EUT (or units of a system) greater than $1m^3$ or weighing more than 100kg it is considered generally impractical to apply the standard test method. For these equipment types, a localised test method shall be applied to all the areas of the equipment considered most likely to be susceptible. However it should be stressed that the normal method be used wherever possible and that the localised method be limited to exceptional circumstances.

For the purpose of the test, the EUT should be powered and in its normal mode of operation throughout and some means of indication should be present to establish its correct operation.

7 APPLICABLE DOCUMENTS

7.1 Referenced

The documents listed here are specified within this Category of the AECTP 500 series.

Ref 1	AECTP 505	Verification Methodology for the Electromagnetic Hardness of Aircraft
Ref 2	AECTP 506	Sea Platforms and Systems Electrical/Electromagnetic Environmental Effects Test and Verification
Ref 3	AECTP 507	Land Platforms and Systems Electrical/Electromagnetic Environmental Effects Test and Verification
Ref 4	AECTP 508	Introduction to Ordnance Test and Verification Procedures
		Leaflet 1: Guidance for Testing the Electromagnetic Vulnerability of Ordnance and Weapon Systems

		Leaflet 2: Electrostatic Discharge Munitions Test Procedure
		Leaflet 3: Hazards to Electromagnetic Radiation to Ordnance (HERO) Test Procedures
		Leaflet 4: Lightning Munition Assessment and Test Procedures
		Leaflet 5: Nuclear Electromagnetic Pulse Test Procedures for Munitions Containing Electrically Initiated Devices
Ref 5	MIL-STD-469	Radar Engineering Design Requirements, Electromagnetic Compatibility
Ref 6	AECTP 250	Electrical/Electromagnetic Environmental Conditions
		Leaflet 251: General Introduction
		Leaflet 252: RF Ambient Environments
		Leaflet 253: Electrostatic Charging, Discharge and Precipitation Static
		Leaflet 254: Atmospheric Electricity and Lightning
		Leaflet 255: DC Magnetic and Low Frequency Fields
		Leaflet 256: Nuclear Electromagnetic Pulse
		Leaflet 257: High Power Microwave
		Leaflet 258: RF Electromagnetic Environments
		Leaflet 259: Intra System Electromagnetic Environments Electrical Power Quality
Ref 7	DO-160	Environmental Conditions and Test Procedures for Airborne Equipment
Ref 8	SAE ARP 1972	Recommended Measurement Practices and Procedures for EMC Testing
Ref 9	CISPR-16-1	Specification for Radio Disturbance and Immunity Measuring Apparatus and Methods
Ref 10	ANSI/IEEE C63.4	Standard for Electromagnetic Compatibility, Radio-Noise Emissions from Low Voltage Electrical and Electronic Equipment in the Range of 9 kHz to 1 GHz, Methods of Measurement
Ref 11	ICNIRP Guidelines	International Commission on Non Ionising Radiation Protection (ICNIRP) Guidelines for Limiting Exposure to time varying Electric, Magnetic, and Electromagnetic Fields up to 300 GHz
Ref 12	ANSI/IEEE C63.2	Standard for Instrumentation, Electromagnetic Noise and Field Strength, 10 kHz to 40 GHz, Specifications
Ref 13	ANSI/NCSL Z540-1	General Requirements for Calibration Laboratories And Measuring and Test Equipment
Ref 14	ISO 10012-1	Quality Assurance Requirements for Measuring Equipment
Ref 15	ARP 958	Electromagnetic Interference Measurement Antennas; Standard Calibration Requirements and Methods
Ref 16	MIL-STD-704	Aircraft Electric Power Characteristics
Ref 17	BS EN 61000-4-2 1995	Electromagnetic compatibility (EMC) – Test and Measurement Techniques – Electrostatic Discharge Immunity Test
Ref 18	AECTP 502	Electrical / Electromagnetic Environmental Tests. Man Worn and Man Portable Equipment Tests

Ref 19	AECTP 503	Electrical / Electromagnetic Environmental Tests. Ground Support Equipment Test Procedures
Ref 20	Technical Note 1092	Design, Evaluation, and Use of a Reverberation Chamber for Performing Electromagnetic Susceptibility/Vulnerability Measurements
Ref 21	Technical Note 1508	Evaluation of the NASA Langley Research Center Mode-Stirred Chamber Facility
Ref 22	ANSI/IEEE C63.14	Standard Dictionary for Technologies of Electromagnetic Compatibility (EMC), Electromagnetic Pulse (EMP), and Electrostatic Discharge (ESD)
Ref 23	NATO AAP-55	NATO Glossary of E3 Terms and Definitions English and French
Ref 24	ASTM E 380	Standard for Metric Practice (DoD adopted)

7.2 Information Only

ADS-37A-PRF	Electromagnetic Environmental Effects (E3) Design and Verification Requirements
AFSC DH 1-4	Air Force Systems Command Design Handbook, EMC
AMC Pamphlet 706-410	Engineering Design Handbook, EMC
Defence Standard 59-411	Electromagnetic Compatibility
MIL-HDBK-235	Electromagnetic (Radiated) Environment Considerations for Design and Procurement of Electrical and Electronic Equipment
MIL-HDBK-237	Electromagnetic Environmental Effects and Spectrum Supportability Guidance for the Acquisition Process
MIL-HDBK-423	HEMP Protection for Fixed and Transportable Ground-Based Facilities
MIL-STD-188-125	HEMP Protection for Ground-Based C4I Facilities Performing Critical, Time-Urgent Missions
MIL-STD-461	Requirements for the Control of Electromagnetic Interference Characteristics of Subsystems and Equipment
MIL-STD-464A	Electromagnetic Environmental Effects Requirements for Systems

8 ACRONYMS

The following acronyms used in this category are:

A	Amperes
AC	Alternating Current
A/m	Amps per Metre
ASW	Anti-submarine Warfare
BIT	Built-in-Test
CFC	Carbon Fibre Compound
CTL	Computed Transient Levels
CW	Continuous Wave
DC	Direct Current
E3	Electromagnetic Environmental Effects

ECM	Electronic Countermeasures
EED	Electro Explosive Device
EIRP	Effective Isotropic Radiated Power
EM	Electromagnetic
EMC	Electromagnetic Compatibility
EME	Electromagnetic Environment
EMI	Electromagnetic Interference
EMICP	Electromagnetic Interference Control Procedures
EMITP	Electromagnetic Interference Test Procedures
EMITR	Electromagnetic Interference Test Report
EMP	Electromagnetic Pulse
ERP	Effective Radiated Power
ESD	Electro Static Discharge
EUT	Equipment Under Test
FADEC	Fully Automated Digital Electronic Control
GIE	Group Indirect Effects
GPI	Ground Plane Interference
GFE	Government Furnished Equipment
HPM	High Power Microwave
IP	Intermediate Pulse
kW	Kilo Watts
LISN	Line Impedance Stabilization Network
LLP	Lightning Protection Plan
LP	Long Pulse
MAD	Magnetic Anomaly Detection
mV	milli Volts
NDI	Non-Developmental Item
NEMP	Nuclear Electro Magnetic Pulse
NOE	Nap-of-the-earth
nV	nano Volts
RF	Radio Frequency
RFID	Radio Frequency Identification Tag
RMS	Root Mean Square
SP	Short Pulse
TEM	Transverse Electromagnetic
TPD	Terminal Protection Device
UPS	Uninterruptible Power Supplies

V	Volts
V/m	Volts per Metre
VFR	Visual Flight Rules
VSWR	Voltage Standing Wave Ratio
W	Watts
WLAN	Wireless Local Area Network

9 DEFINITIONS

The terms used in this category of the standard are defined in ANSI C63.14 Ref [22] and NATO Glossary of E3 Terms Ref [23].

In additional the following definitions are applicable to this Category of the AECTP 500 series:

Above Deck

In the domain of Electromagnetic Environmental Effects (E3), an area on a ship which is directly exposed to the external electromagnetic environment.

Below Deck

In the domain of Electromagnetic Environmental Effects (E3), an area on ships which is generally metallic or an area which provides an equivalent attenuation to electromagnetic radiation.

E.g. The metal hall or superstructure of a surface ship; the hull of a submarine; and the screened rooms in non-metallic ships.

External Installation

An equipment location, on a platform which is exposed to the external electromagnetic environment such as an aircraft cockpit, which does not use electrically conductive treatments on the canopy or windscreen.

Internal Installation

An equipment location on a platform, which is totally inside an electrically conductive structure, such as a typical avionics bay in an aluminium skin aircraft.

Flight-line Equipment

Any support equipment that is attached to or used next to an aircraft during pre-flight or post-flight operations such as uploading or downloading data, maintenance diagnostics, or equipment functional testing.

Metric Units

Metric units are a system of basic measures, which are defined by the International System of Units based on "Le System International d'Unites (SI)", of the International Bureau of Weights and Measures. These units are described in ASTM E 380 Ref [24].

Mission Critical

The condition, event, operation, process, or item capable of prohibiting the execution of a mission, significantly reducing the operational capability, or significantly increasing system vulnerability, if it occurs or if it is performed improperly.

Non-developmental Item

Non-developmental item is a broad, generic term that covers material available from a wide variety of sources with little or no development effort required by the Government.

Non Critical

Non-Critical in that disturbance in the functional capability of the equipment does not degrade the overall performance of the materiel.

Safety Critical

The electronic systems in which a failure or malfunction may cause a direct hazard to personnel and/or loss of materiel.

Test Setup Boundary

The test setup boundary includes all enclosures of the EUT and the 2 metres of exposed interconnecting leads except for leads which are shorter in the actual installation and power leads where electrical cable assemblies shall simulate actual installation and usage. For example, shielded cables or shielded leads including power leads and wire grounds within cables shall be used only if they have been specified in installation requirements.

10 NCE01 CONDUCTED EMISSIONS, POWER LEADS, 30 Hz to 10 kHz

10.1 NCE01 Applicability

This requirement is applicable for power leads, including returns, that obtain power from other sources not part of the Equipment Under Test (EUT) for Sea and Air applications. For AC applications, this requirement is applicable starting at the second harmonic of the EUT power frequency.

Reference should be made to the **Applicability Table 501-7** and **Clauses 6.4** and **6.8** before subjecting the EUT to this test method. This test method may be substituted by NCE05 where some procuring authorities require testing to a higher frequency.

10.2 NCE01 Limits

Conducted emissions on power leads shall not exceed the applicable values shown on **Figure NCE01-1** for DC submarine applications, **Figure NCE01-2** for 60 Hz submarine applications, **Figure NCE01-3** for 400 Hz submarine applications and **Figure NCE01-4** for air applications.

10.3 NCE01 Test Procedure

10.3.1 Purpose

This test procedure is used to verify that electromagnetic emissions from the EUT do not exceed the specified requirements for power input leads including returns.

10.3.2 Test Equipment

The test equipment shall be as follows:

a. Measurement receivers

b. Current probes

c. Signal generator

d. Data recording device

e. Oscilloscope

f. Resistor (R)

g. 50 µH LISNs

10.3.3 Setup

The test setup shall be as follows:

a. Maintain a basic test setup for the EUT as shown and described in, **Figures 501-3** through to **501-6** and **Clause 4.3.8**. The LISN may be removed or replaced with an alternative stabilization device when approved by the procuring activity.

b. Calibration. Configure the test setup for the measurement system check as shown in **Figure NCE01-5**.

c. EUT testing

(1) Configure the test setup for compliance testing of the EUT as shown in **Figure NCE01-6**.

(2) Position the current probe 50 mm from the LISN.

10.3.4 Procedures

The test procedures shall be as follows:

a. Turn on the measurement equipment and allow a sufficient time for stabilization.

b. Calibration. Evaluate the overall measurement system from the current probe to the data output device.

   (1) Apply a calibrated signal level, which is at least 6 dB below the applicable limit at 1 kHz, 3 kHz, and 10 kHz, to the current probe.

   (2) Verify the current level, using the oscilloscope and load resistor; also, verify that the current waveform is sinusoidal.

   (3) Scan the measurement receiver for each frequency in the same manner as a normal data scan. Verify that the data-recording device indicates a level within ±3 dB of the injected level.

   (4) If readings are obtained which deviate by more than ±3 dB, locate the source of the error and correct the deficiency prior to proceeding with the testing.

c. EUT testing. Determine the conducted emissions from the EUT input power leads including returns.

   (1) Turn on the EUT and allow sufficient time for stabilization.

   (2) Select an appropriate lead for testing and clamp the current probe into position.

   (3) Scan the measurement receiver over the applicable frequency range, using the bandwidths and minimum measurement times specified in **Table 501-2** of Category 501.

   (4) Repeat 10.3.4b (4) for each power lead.

10.3.5 Data Presentation

Data presentation shall be as follows:

a. Automatically and continuously plot amplitude versus frequency profiles on X-Y axis outputs. Manually gathered data is not acceptable except for plot verification.

b. Display the applicable limit on each plot.

c. Provide a minimum frequency resolution of 1% or twice the measurement receiver bandwidth, whichever is less stringent, and a minimum amplitude resolution of 1 dB for each plot.

d. Provide plots for both the measurement and system check portions of the procedure.

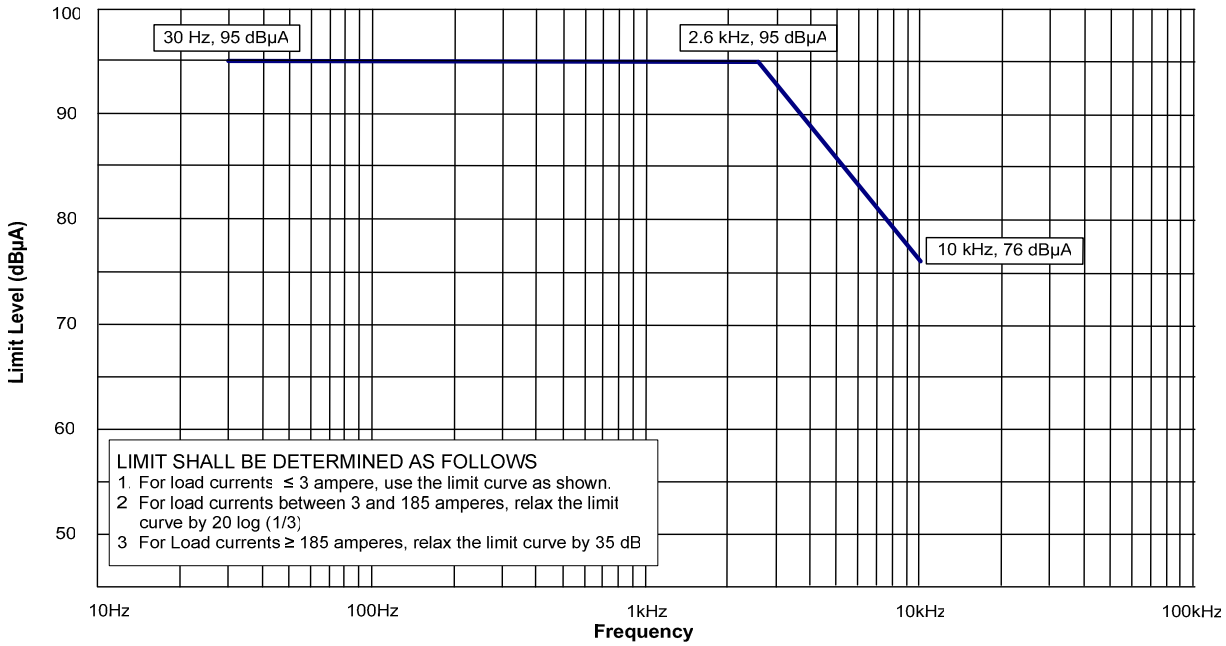

Figure NCE01-1 Limit for Submarine Applications, DC

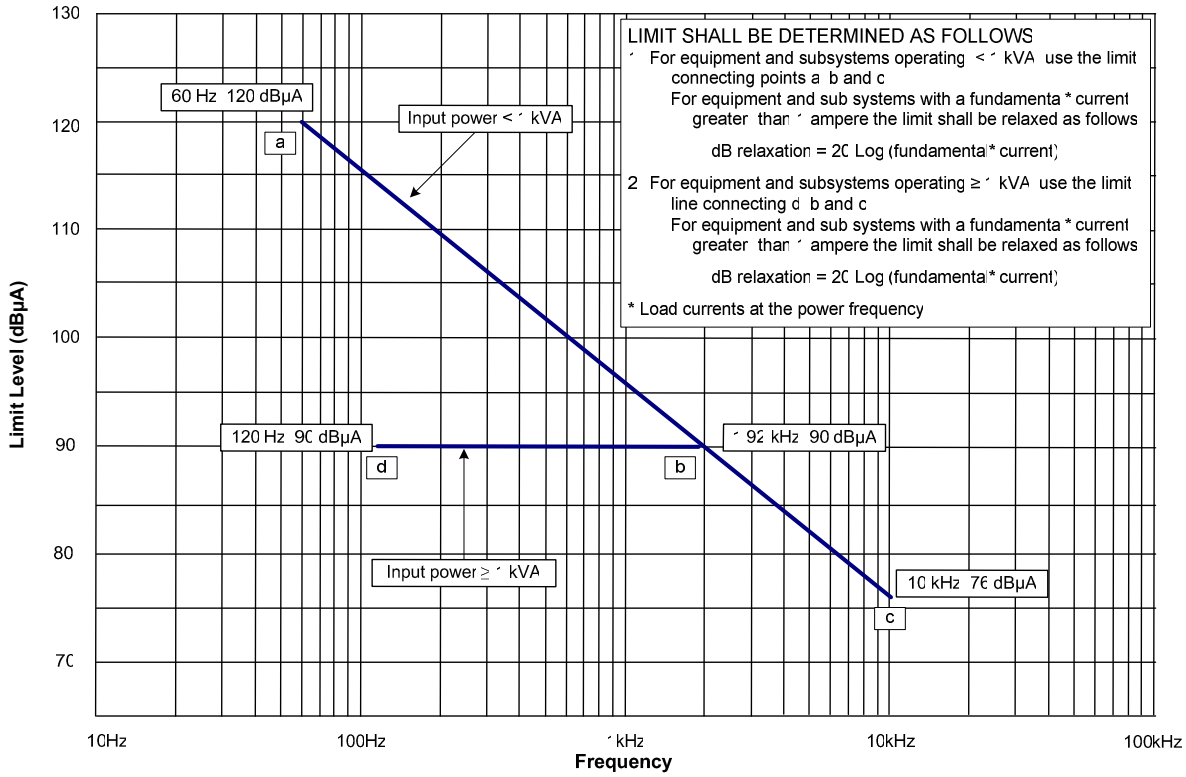

Figure NCE01-2 Limit for Surface Ships and Submarine Applications, 60 Hertz

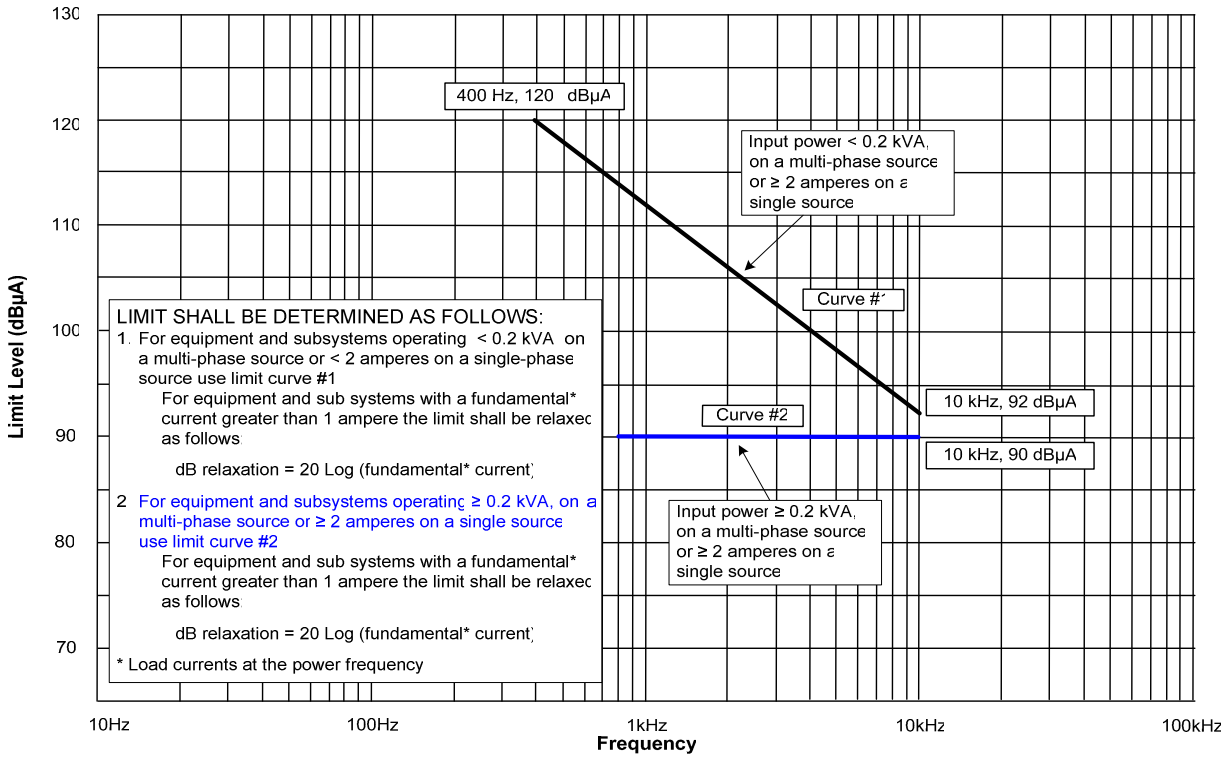

Figure NCE01-3 Limit for Surface Ships and Submarine Applications, 400Hz

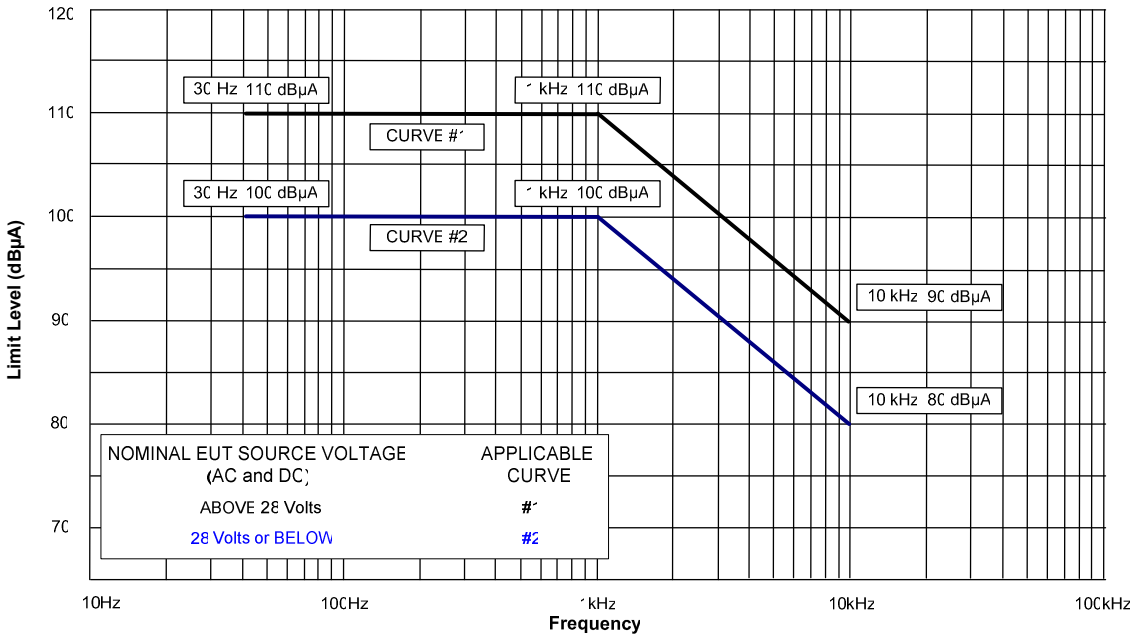

Figure NCE01-4 Limit for Air Applications

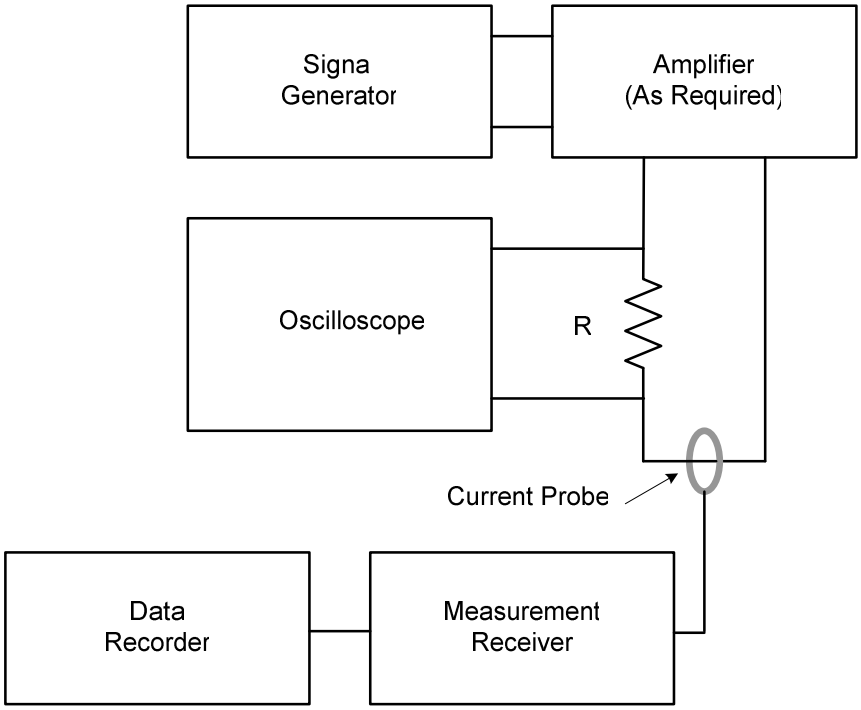

Figure NCE01-5 **Measurement System Check**

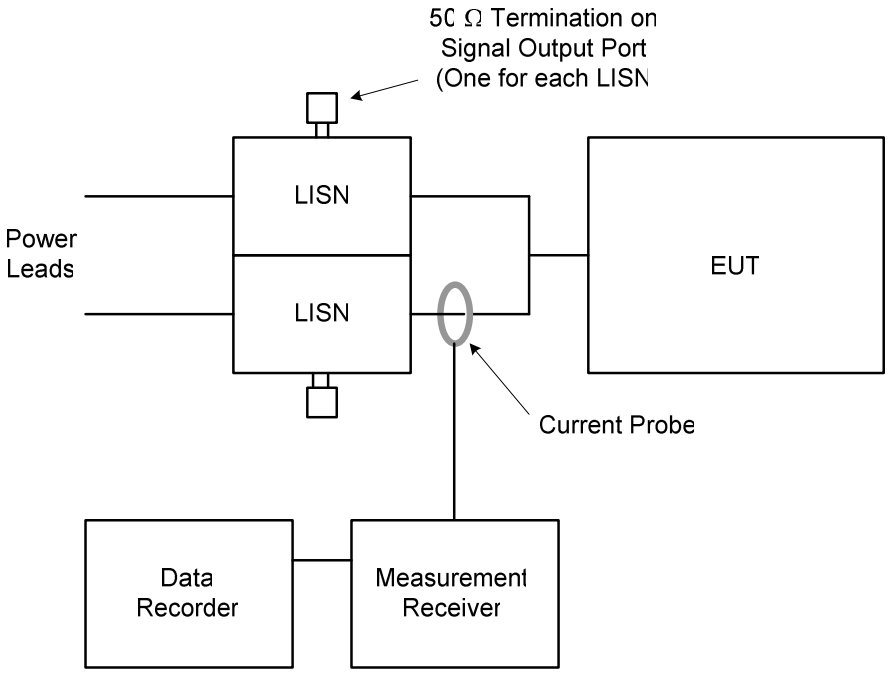

Figure NCE01-6 **Measurement Setup**

11 NCE02 CONDUCTED EMISSIONS, POWER LEADS, 10 kHz to 10 MHz

11.1 NCE02 Applicability

This requirement is applicable from 10 kHz to 10 MHz for all power leads, including returns that obtain power from other sources not part of the Equipment Under Test (EUT). Reference should also be made to **Clause 6.5**.

11.2 NCE02 Limits

Conducted emissions on power leads shall not exceed the applicable values shown on **Figure NCE02-1**

11.3 NCE02 Test Procedure

11.3.1 Purpose

This test procedure is used to verify that electromagnetic emissions from the EUT do not exceed the specified requirements for power input leads, including returns.

11.3.2 Test Equipment

The test equipment shall be as follows:

a. Measurement receiver

b. Data recording device

c. Signal generator

d. Attenuator, 20 dB, 50 Ω

e. Oscilloscope

f. LISNs

11.3.3 Setup

The test setup shall be as follows:

a. Maintain a basic test setup for the EUT as shown and described in **Figures 501-3** through to **501-6** and **Clause 4.3.8**.

b. Calibration.

(1) Configure the test setup for the measurement system check as shown in **Figure NCE02-2**. Ensure that the EUT power source is turned off.

(2) Connect the measurement receiver to the 20 dB attenuator on the signal output port of the LISN.

c. EUT testing.

(1) Configure the test setup for compliance testing of the EUT as shown in - **Figure NCE02-3**.

(2) Connect the measurement receiver to the 20 dB attenuator on the signal output port of the LISN.

11.3.4 Procedures

The test procedures shall be as follows:

a. Calibration. Perform the measurement system check using the measurement system check setup of **Figure NCE02-2**.

   (1) Turn on the measurement equipment and allow a sufficient time for stabilization.

   (2) Apply a signal level that is at least 6 dB below the limit at 10 kHz, 100 kHz, 2 MHz and 10 MHz to the power output terminal of the LISN. At 10 kHz and 100 kHz, use an oscilloscope to calibrate the signal level and verify that it is sinusoidal. At 2 MHz and 10 MHz, use a calibrated output level directly from a 50 Ω signal generator.

   (3) Scan the measurement receiver for each frequency in the same manner as a normal data scan. Verify that the measurement receiver indicates a level within ±3dB of the injected level. Correction factors shall be applied for the 20dB attenuator and the voltage drop due to the LISN 0.25 µF coupling capacitor.

   (4) If readings are obtained which deviate by more than ±3 dB, locate the source of the error and correct the deficiency prior to proceeding with the testing.

   (5) Repeat 3.4a(2) through to 3.4a(4) for each LISN.

b. EUT testing. Perform emission data scans using the measurement setup of **Figure NCE02-3**.

   (1) Turn on the EUT and allow a sufficient time for stabilization.

   (2) Select an appropriate lead for testing.

   (3) Scan the measurement receiver over the applicable frequency range, using the bandwidths and minimum measurement times in **Table 501-2** of Category 501.

   (4) Repeat 11.3.4b(2) and 11.3.4b(3) for each power lead.

11.3.5 Data Presentation

Data presentation shall be as follows:

a. Continuously and automatically plot amplitude versus frequency profiles on X-Y axis outputs. Manually gathered data is not acceptable except for plot verification.

b. Display the applicable limit on each plot.

c. Provide a minimum frequency resolution of 1% or twice the measurement receiver bandwidth, whichever is less stringent, and a minimum amplitude resolution of 1dB for each plot.

d. Provide plots for both the measurement system check and measurement portions of the procedure.

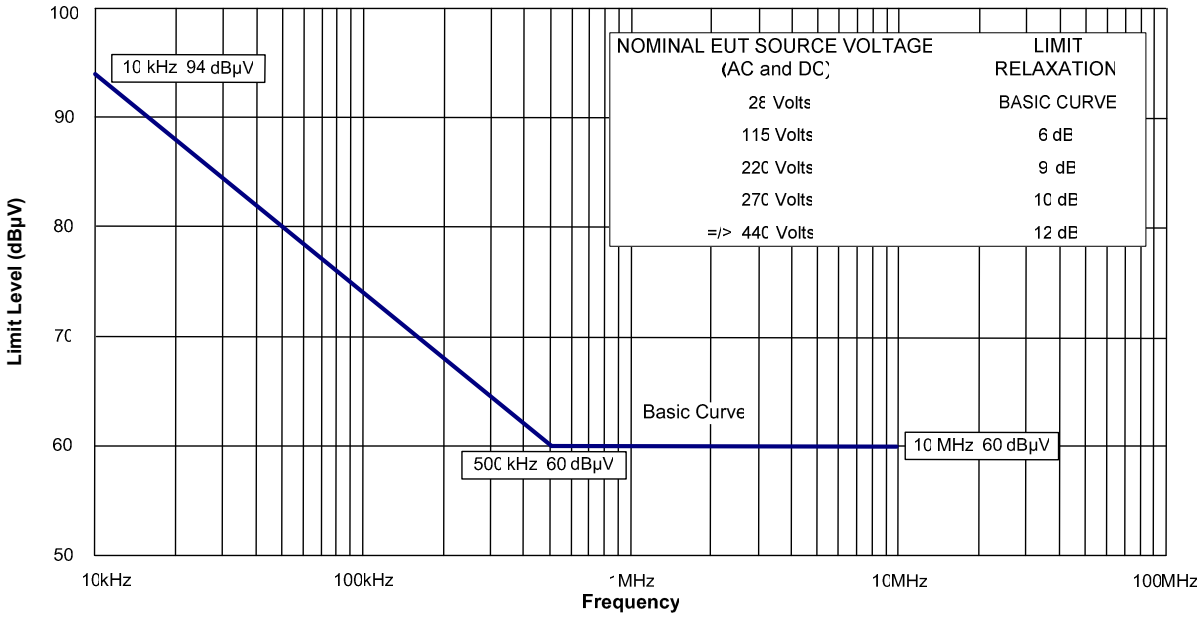

Figure NCE02-1 Limit (EUT power leads, AC and DC) for all Applications

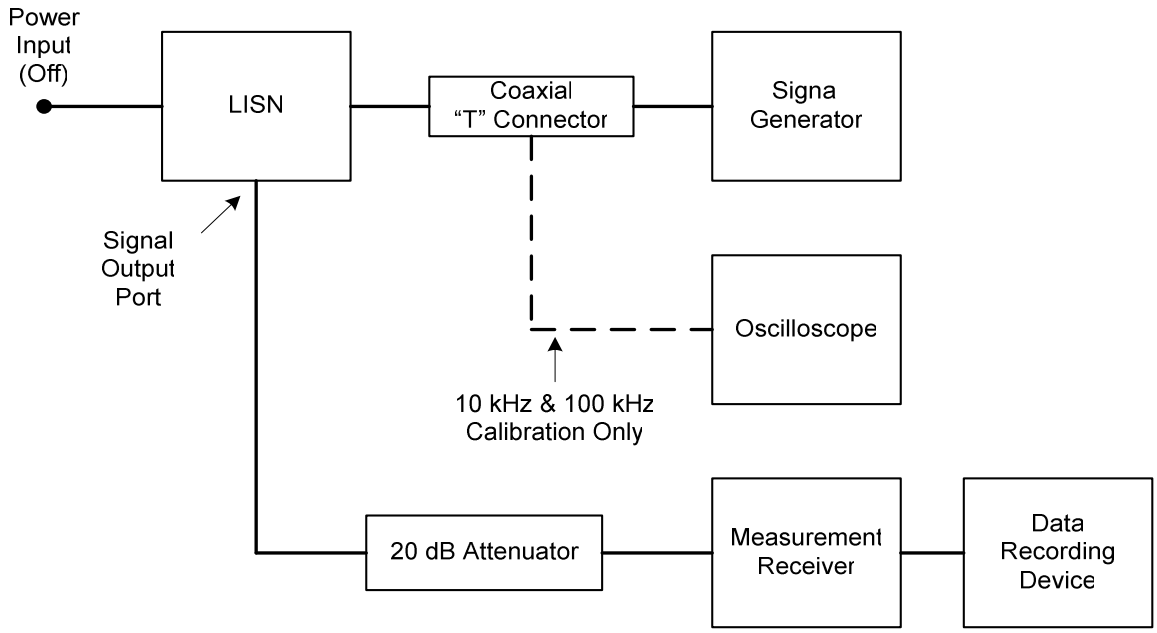

Figure NCE02-2 Measurement System Check Setup

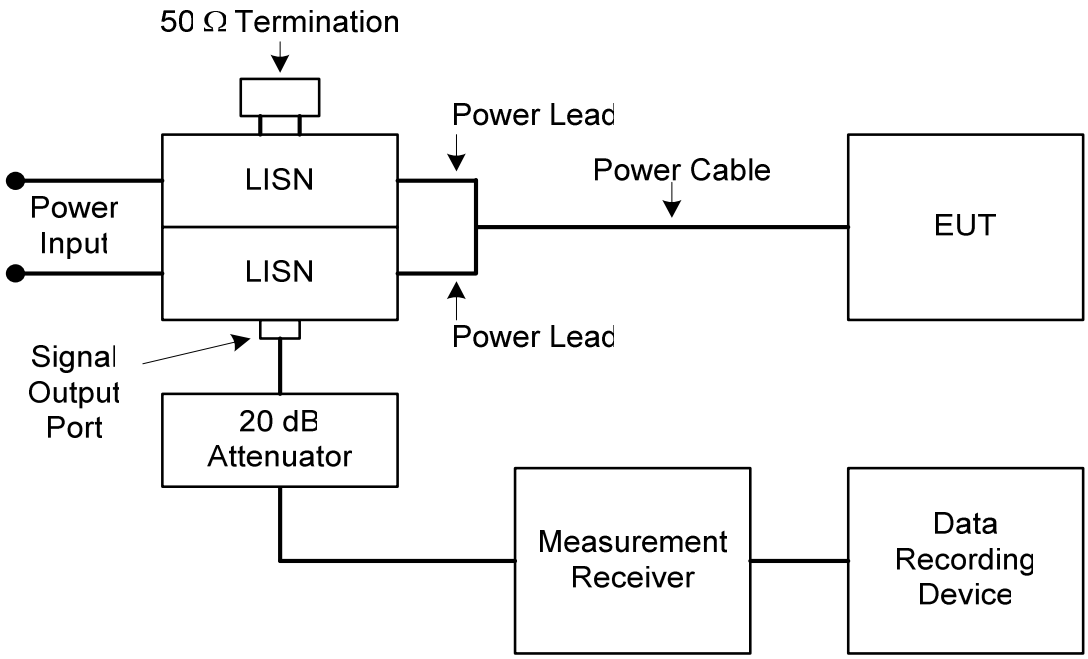

Figure NCE02-3 Measurement Setup

12 NCE03 CONDUCTED EMISSIONS, ANTENNA TERMINAL, 10 KHz - 40 GHz

12.1 NCE03 Applicability

This requirement is applicable to the antenna terminals of transmitters, receivers, and amplifiers. The requirement is not applicable to equipment designed with antennas permanently mounted to the equipment under test (EUT). The transmit mode portion of this requirement is not applicable within the EUT necessary bandwidth and within ±5 % of the fundamental frequency. Depending on the operating frequency range of the EUT, the start frequency of the test is as shown in **Table NCE03-1**:

EUT Operating Frequency Range	Start Frequency of Test
10 kHz to 3 MHz	10 kHz
3 MHz to 300 MHz	100 kHz
300 MHz to 3 GHz	1 MHz
3 GHz to 40 GHz	10 MHz

Table NCE03-1 EUT Operating Frequency Range

The end frequency of the test is 40 GHz or twenty times the highest generated or received frequency within the EUT, whichever is less. For equipment using waveguide, the requirement does not apply below eight-tenths of the waveguide's cutoff frequency. NRE03 may be used as an alternative for NCE03 for testing transmitters with their operational antennas. NRE02 is applicable for emissions from antennas into the receive and standby modes for equipment designed with antennas permanently mounted to the EUT. Reference should also be made to **Clause 6.6**.

12.2 NCE03 Limits

Conducted emissions at the EUT antenna terminal shall not exceed the values given below.

Receivers: 34 dBµV

Transmitters and amplifiers (standby mode): 34 dBµV

Transmitters and amplifiers (transmit mode): Harmonics, except the second and third, and all other spurious emissions shall be at least 80 dB down from the level at the fundamental. The 2nd and 3rd harmonics shall be suppressed to a level of -20 dBM or 80 dB, whichever requires less suppression.

12.3 NCE03 Test Procedure

12.3.1 Purpose

This test procedure is used to verify that conducted emissions appearing at the antenna terminal of the EUT do not exceed specified requirements.

12.3.2 Test Equipment

The test equipment shall be as follows:

a. Measurement receiver

b. Attenuators, 50 Ω

c. Rejection networks

d. Directional couplers

e. Dummy loads, 50 Ω

f. Signal generators. For amplifier testing, a signal generator is required to drive the amplifier that provides the modulation used in the intended application and that has spurious and harmonic outputs that are down at least 6 dB greater than the applicable limit.

g. Data recording device

12.3.3 Setup

It is not necessary to maintain the basic test setup for the EUT as shown and described in **Figures 501-3** through to **501-6** and **Clause 4.3.8**. The test setup shall be as follows:

Calibration. Configure the test setup for the signal generator path shown in **Figures NCE03-1** through **NCE03-3** as applicable. The choice of **Figures NCE03-1** or **NCE03-2** is dependent upon the capability of the measuring equipment to handle the transmitter power.

EUT Testing. Configure the test setup for the EUT path shown in **Figures NCE03-1** through **NCE03-3** as applicable. The choice of **Figures NCE03-1** or **NCE03-2** is dependent upon the capability of the measuring equipment to handle the transmitter power.

12.3.4 Procedures

12.3.4.1 Transmit Mode for Transmitters and Amplifiers

The test procedure shall be as follows:

Turn on the measurement equipment and allow a sufficient time for stabilization.

Calibration.

(1) Apply a known calibrated signal level from the signal generator through the system check path at a mid-band fundamental frequency (f_o).

(2) Scan the measurement receiver in the same manner as a normal data scan. Verify the measurement receiver detects a level within ±3 dB of the expected signal.

(3) If readings are obtained which deviate by more than ±3 dB, locate the source of the error and correct the deficiency prior to proceeding with the test.

(4) Repeat 3.4.1b(1) through to 3.4.1b(3) at the end points of the frequency range of test.

EUT Testing

(1) Turn on the EUT and allow sufficient time for stabilization.

(2) For transmitters, tune the EUT to the desired test frequency and apply the appropriate modulation for the EUT as indicated in the equipment specification. For amplifiers, apply an input signal to the EUT that has the appropriate frequency, power level, and modulation as indicated in the equipment specification. For transmitters and amplifiers for which these parameters vary, test parameters shall be chosen such that the worst case emissions spectrum will result.

(3) Use the measurement path to complete the rest of this procedure.

(4) Tune the test equipment to the operating frequency (f_o) of the EUT and adjust for maximum indication.

(5) Record the power level of the fundamental frequency (f_o) and the measurement receiver bandwidth.

(6) Insert the fundamental frequency rejection network, when applicable.

(7) Scan the frequency range of interest and record the level of all harmonics and spurious emissions. Add all correction factors for cable loss, attenuators and rejection networks. Maintain the same measurement receiver bandwidth used to measure the power level of the fundamental frequency (f_o) in 12.3.4.1c(5).

(8) Verify spurious outputs are from the EUT and not spurious responses of the measurement system.

(9) Repeat 12.3..4.1c(2) through to 12.3.4.1c(8) for other frequencies as required by **Clauses 4.3.9.1** and **4.3.9.2**.

(10) Determine measurement path losses at each spurious frequency as follows:

(a) Replace the EUT with a signal generator.

(b) Retain all couplers and rejection networks in the measurement path.

(c) Determine the losses through the measurement path. The value of attenuators may be reduced to facilitate the end-to-end check with a low level signal generator.

12.3.4.2 Receivers and Stand-by Mode for Transmitters and Amplifiers

The test procedure shall be as follows:

Turn on the measurement equipment and allow a sufficient time for stabilization.

Calibration.

(1) Apply a calibrated signal level, which is 6 dB below the applicable limit, from the signal generator through the system check path at a midpoint test frequency.

(2) Scan the measurement receiver in the same manner as a normal data scan. Verify the measurement receiver detects a level within ±3 dB of the injected signal.

(3) If readings are obtained which deviate by more than ±3 dB, locate the source of the error and correct the deficiency prior to proceeding with the test.

(4) Repeat 12.3.4.2b(1) through 12.3.4.2b(3) at the end points of the frequency range of test.

c. EUT Testing

(1) Turn on the EUT and allow sufficient time for stabilization.

(2) Tune the EUT to the desired test frequency and use the measurement path to complete the rest of this procedure.

(3) Scan the measurement receiver over the applicable frequency range, using the bandwidths and minimum measurement times of **Table 501-2**.

(4) Repeat 12.3.4.2c(2) and 12.3.4.2c(3) for other frequencies as required by **Clauses 4.3.9.1** and **4.3.9.2**.

12.3.5 Data Presentation

12.3.5.1 Transmit Mode for Transmitters and Amplifiers

The data presentation shall be as follows:

a. Continuously and automatically plot amplitude versus frequency profiles for each tuned frequency. Manually gathered data is not acceptable except for plot verification.

b. Provide a minimum frequency resolution of 1% or twice the measurement receiver bandwidth, whichever is less stringent, and a minimum amplitude resolution of 1 dB for each plot.

c. Provide tabular data showing f_o and frequencies of all harmonics and spurious emissions measured, power level of the fundamental and all harmonics and spurious emissions, dB down level, and all correction factors including cable loss, attenuator pads, and insertion loss of rejection networks.

d. The relative dB down level is determined by subtracting the level in 12.3.4.1c(7) from that obtained in 12.3.4.1c(5).

12.3.5.2 Receivers and Stand-by Mode for Transmitters and Amplifiers

The data presentation shall be as follows:

a. Continuously and automatically plot amplitude versus frequency profiles for each tuned frequency. Manually gathered data is not acceptable except for plot verification.

b. Display the applicable limit on each plot.

c. Provide a minimum frequency resolution of 1% or twice the measurement receiver bandwidth, whichever is less stringent, and a minimum amplitude resolution of 1 dB for each plot.

d. Provide plots for both the measurement and system check portions of the procedure.

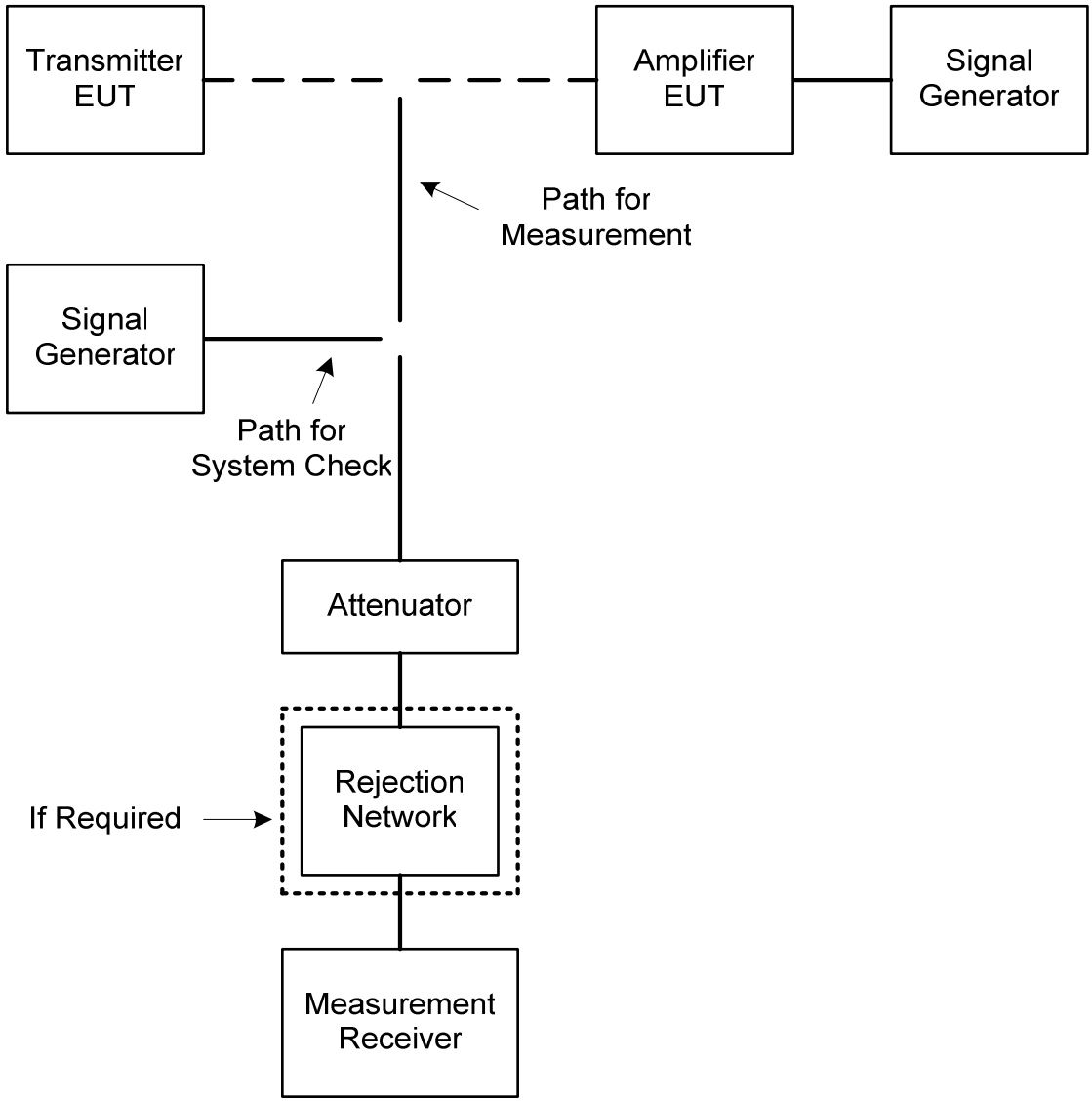

Figure NCE03-1 Setup for Low Power Transmitters and Amplifiers

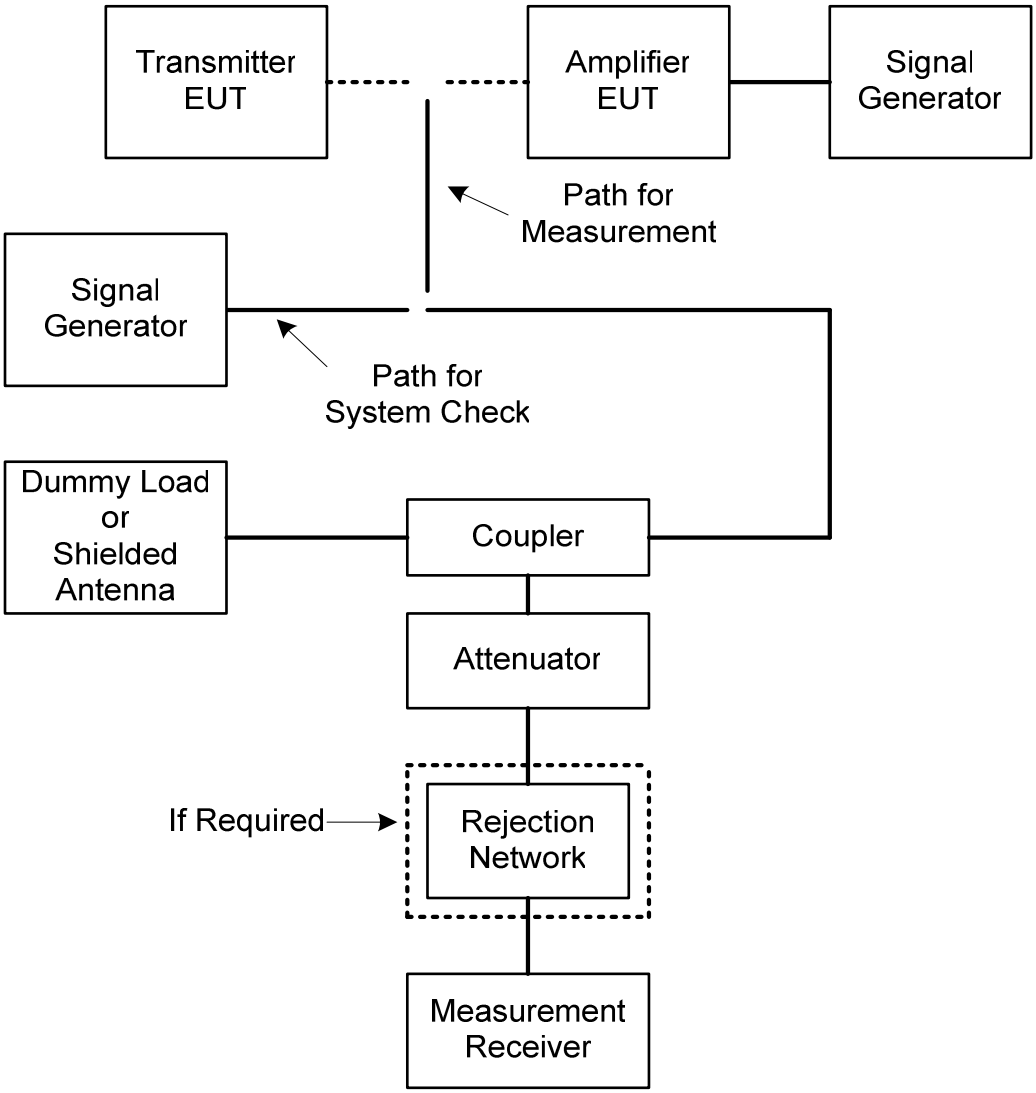

Figure NCE03-2 Setup for High Power Transmitters and Amplifiers

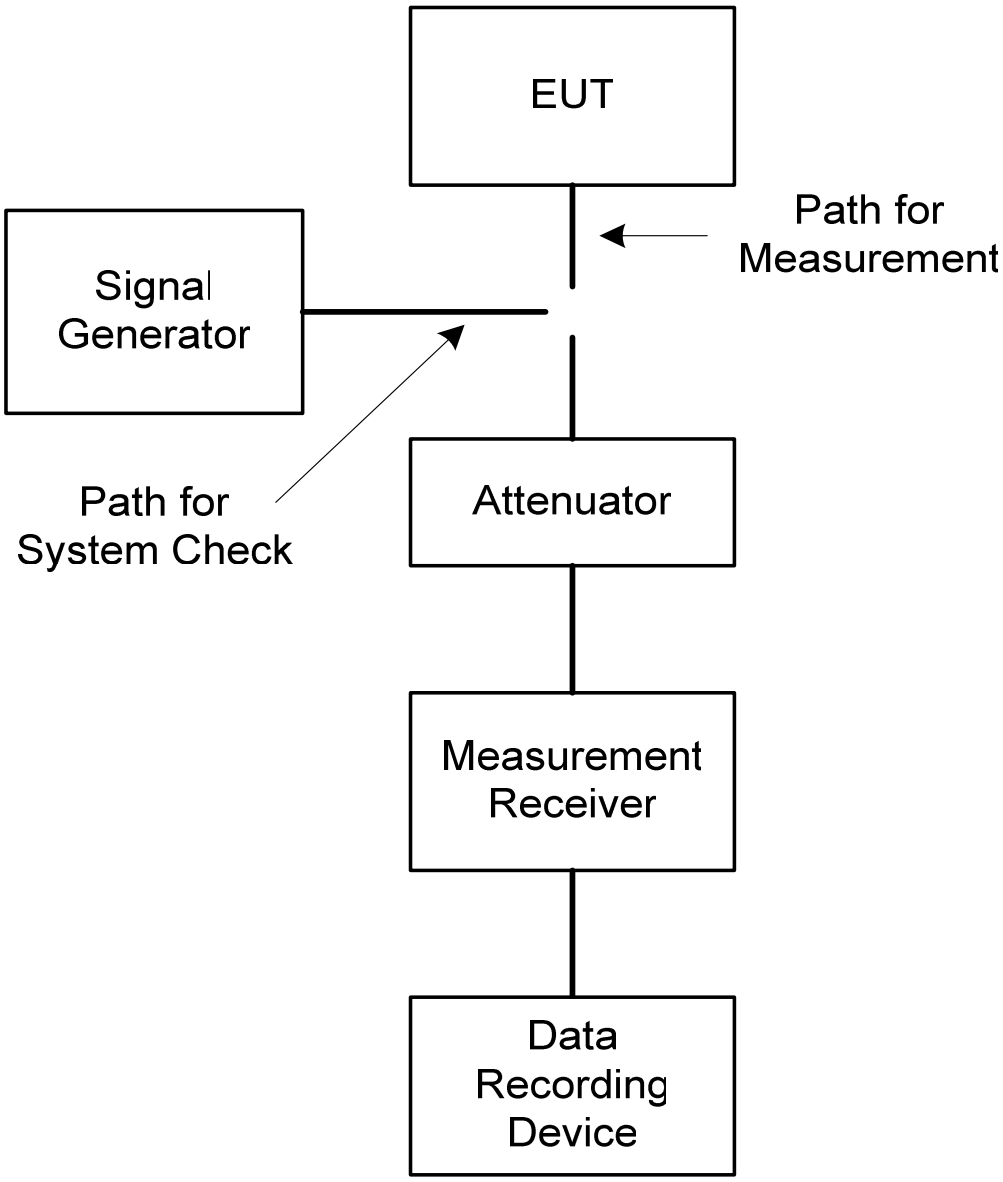

Figure NCE03-3Setup for Receivers and Stand-by mode for Transmitters and Amplifiers

13 NCE04, CONDUCTED EMISSIONS EXPORTED TRANSIENTS ON PRIMARY POWER LINES

13.1 NCE04 Applicability

The purpose of this test is to control the amplitude and duration of transients appearing on primary power lines caused by the normal operation of the EUT and also as a result of switching on and off the power supply to the EUT. These transient emissions may couple via conduction and radiation from the power lines to other potentially susceptible equipment in the actual installation.

This test is applicable to AC & DC EUT power cables, which derive their power from an external supply serving other equipment in the actual installation. Where power cables, deriving their power from different sources, are run in bunches or with signal cables from other systems this test is required to check for cross coupling between them.

Reference should also be made to **Clause 6.7**.

13.2 NCE04 Limits

Definition of both contactor switching and functional switching of the EUT are as follows:

a. Contactor switching transients are generated by switching the EUT on and off using an external supply contactor of the type to be used in its final installation. If the contactor type is not known or unavailable, then an alternative of suitable type and current rating may be used.

b. Functional switching transients are generated by switching the EUT on and off using the power switch on the EUT, if fitted. Additionally, functional switching transients may be generated by operation of the EUT, i.e. while operating the EUT over its normal operating sequence and exercising the EUT through its full range of functions.

Test limits for land, sea and air systems are as follows:

13.2.1 Test Limits for Land Service Use (28 Volt Systems)

a. Contactor Switching

The maximum voltage excursion of the superimposed exported transient relative to the steady state voltage prior to disconnection when measured at 50 mm from the EUT shall not exceed:

i. ±250 V peak.

ii. ±150 V peak for a period of longer than 10 μs.

iii. ±100 V peak for a period of longer than 5 ms.

b. Functional Switching

The maximum voltage excursion of the superimposed exported transient, relative to the steady state voltage, when measured at the LISN, shall not exceed ±30 V peak during functional switching of the EUT.

13.2.2 Test Limits for Land Service Use (240 Volt AC Systems)

a. For measurements at the EUT (Contactor Switching):

The maximum voltage excursion of the superimposed exported transient relative to the supply voltage waveform shall not exceed:

± 2000 V peak for 415 V 3-phase AC equipment

± 1100 V peak for 240 V 1-phase AC equipment

The period for which any individual voltage excursion of the transient exceeds:

± 1300 V peak for 415 V 3-phase AC equipment

± 730 V peak for 240 V 1-phase AC equipment

Shall not exceed 10 μS.

The period for which the voltage excursion of the transient exceeds:

± 1000 V peak for 415 V 3-phase AC equipment

± 550 V peak for 240 V 1-phase AC equipment

Shall not exceed 5 ms (measured from the time the voltage exceeds these limits to the time it returns to, and remains within, the limits).

b. For measurements at the LISN (EUT Function Switching):

The maximum superimposed voltage excursion of the exported transient relative to the supply voltage waveform shall not exceed:

± 200 V peak for 415 V 3-phase AC equipment

± 110 V peak for 240 V 1-phase AC equipment

13.2.3 Test Limits Sea Services Use (DC Systems)

a. For measurements at the EUT (Contactor Switching):

The maximum voltage excursion of the superimposed exported transient, relative to the supply voltage waveform, shall not exceed:

± 2000 V peak for 720 V DC Equipment

± 960 V peak for 355 V DC Equipment

± 480 V peak for 28 V DC Equipment

The period for which any individual voltage excursion of the transient exceeds:

± 1300 V peak for 720 V DC Equipment

± 640 V peak for 355 V DC Equipment

± 320 V peak for 28 V DC Equipment

Shall not exceed 10 μS.

The period for which the voltage excursion of the transient exceeds:

± 1000 V peak for 720 V DC Equipment

± 500 V peak for 355 V DC Equipment

± 250 V peak for 28 V DC Equipment

Shall not exceed 5 ms (measured from the time the voltage exceeds these limits to the time it returns to, and remains within, the limits).

b. For measurements at the LISN (EUT Functional Switching):

The maximum superimposed voltage excursion of the exported transient, relative to the supply voltage waveform, shall not exceed:

± 200 V peak for 720 V DC Equipment

± 96 V peak for 355 V DC Equipment

± 48 V peak for 28 V DC Equipment

13.2.4 Test Limits Sea Services Use (AC Systems)

a. For measurements at the EUT (Contactor Switching):

The maximum voltage excursion of the superimposed exported transient, relative to the supply voltage waveform, shall not exceed:

± 2000 V peak for 440 V 3-phase AC Equipment

± 600 V peak for 115 V Single-phase AC Equipment

The period for which any individual voltage excursion of the transient exceeds:

± 1300 V peak for 440 V 3-phase AC Equipment

± 400 V peak for 115 V Single-phase AC Equipment

Shall not exceed 10 μS.

The period for which the voltage excursion of the transient exceeds:

± 1000 V peak for 440 V 3-phase AC Equipment

± 300 V peak for 115 V Single-phase AC Equipment

Shall not exceed 5 ms (measured from the time the voltage exceeds these limits to the time it returns to, and remains within, the limits).

b. For measurements at the LISN (EUT Functional Switching):

The maximum superimposed voltage excursion of the exported transient, relative to the supply voltage waveform, shall not exceed:

± 200 V peak for 440 V 3-phase AC Equipment

± 60 V peak for 115 V Single-phase AC Equipment

13.2.5 Test Limits Aircraft Services Use (28 Volt DC Systems)

a. For measurements at the EUT:

The maximum voltage excursion of the superimposed exported transient, relative to the supply voltage waveform, shall not exceed:

± 100 V peak

The period for which any individual voltage excursion of the transient exceeds:

± 90 V peak

Shall not exceed 10 μS.

The period for which the voltage excursion of the transient exceeds:

± 80 V peak for 28 V DC Equipment

Shall not exceed 5 ms (measured from the time the voltage exceeds these limits to the time it returns to, and remains within, the limits).

b. For measurements at the LISN:

The maximum superimposed voltage excursion of the exported transient, relative to the supply voltage waveform, shall not exceed:

± 30 V peak for 28 V DC Equipment

13.2.6 Test Limits Aircraft Services Use (400 Hz AC Systems)

a. For measurements at the EUT:

The maximum voltage excursion of the superimposed exported transient, relative to the supply voltage waveform, shall not exceed:

± 300 V peak for 200 V Line to Line measurement

± 300 V peak for 115 V Line to Netural measurement

The period for which any individual voltage excursion of the transient exceeds:

± 200 V peak for 200 V Line to Line measurement

± 200 V peak for 115 V Line to Netural measurement

Shall not exceed 10 μS.

The period for which the voltage excursion of the transient exceeds:

± 160 V peak for 200 V Line to Line measurement

± 95 V peak for 115 V Line to Netural measurement

Shall not exceed 5 ms (measured from the time the voltage exceeds these limits to the time it returns to, and remains within, the limits).

b. For measurements at the LISN:

The maximum superimposed voltage excursion of the exported transient, relative to the supply voltage waveform, shall not exceed:

± 160 V peak for 200 V Line to Line measurement

± 90 V peak for 115 V Line to Netural measurement

Note: These latter limits for measurements at the LISN should be tailored for individual project requirements to take into account the aircraft primary power supply characteristics.

13.3 NCE04 Test Procedure

13.3.1 Purpose

The purpose of this test is to measure the amplitude and duration of transients appearing on primary power lines caused by the normal operation of the EUT and also as a result of switching on and off the power supply to the EUT. These transient emissions may couple via conduction and radiation from the power lines to other potentially susceptible equipment in the actual installation.

13.3.2 Test Equipment

The test equipment shall be as follows:

a. Differential / Fast digital data acquisition oscilloscope

b. Contactor

c. Capacitor, 30,000 μF

d. Supply twin 'T' filter (AC supplies only)

e. 50 µF LISNs

13.3.3 Setup

13.3.3.1 The test setup shall be as follows:

a. Maintain the basic test setup for the EUT as shown and described in **Figures 501-2** through to **501-6** and **Clause 4.3.8**.

b. For all EUTs, a switch or contactor of the type normally intended to control the supply to the EUT shall be connected into the power lines. If the contactor is not part of the EUT and its type is not known or available then an alternative, of suitable type and current rating may be used. The contactor shall be inserted at the LISN end of the lines.

c. The oscilloscope probe shall be connected to the power lines at a distance of 50mm from the EUT connector when recording contactor switching transients and a distance of 50mm from the LISN terminals when recording EUT functional switching transients. **Figures NCE04-1** and **NCE04-2** show typical test layouts for DC and AC lines respectively.

d. For AC supplies, a twin 'T' notch filter may be used to filter the power supply frequency. (see Category 501 **Clause 6.7**) With the power frequency filtered, any transients shown on the oscilloscope are relative to the AC waveform when measured between the transient's peak and the oscilloscope's reference level.

e. Alternatively, a fast digitising data acquisition oscilloscope may be used. Although the power supply frequency is not filtered, measurement of all transient types can be made with reference to the AC waveform. This is achieved by reducing the timebase, effectively zooming in on the transient using the data stored within the oscilloscope.

f. It should be noted that different limits may apply for systems operating at power line frequencies or voltages other than those specified in this section.

g. Where a probe / filter combination circuit suitable for recording transients on AC supply lines is used, the measured transient values must be corrected for any attenuation caused.

13.3.3.2 Prior to performing the test the contactor shall be validated. To ascertain that transient levels consistent with contact bounce do not mask those caused by the EUT, the test house shall ensure that the contactor meets the following validation:

a. The set up shall be based on that given in **Figures NCE04-1** and **NCE04-2** except that the EUT is replaced by a resistive load drawing the same current with a 10µF capacitor on each lead to the ground plane and the oscilloscope probes connected directly onto either side of the contactor. The value of the load shall be such that the same current is drawn from the power source as when the EUT is connected.

b. At least 10 operations with the contactor making and breaking shall be monitored, 5 with the oscilloscope +ve triggered and 5 –ve. The worst case transient shall be used to assess whether the contactor is suitable for purpose.

c. The maximum excursion of the transient caused by the contactor bounce shall not exceed 50% of the appropriate test limit.

13.3.4 Procedures

The differential transient voltage appearing between the various power lines shall be measured as follows.

13.3.4.1 Tests For Land Service Use (DC and AC systems)

a. For DC supplies the transient voltage shall be measured between the positive line and the ground plane and also between the zero volt return line and the ground plane.

b. For AC lines the transient voltage shall be measured:

(1) For single-phase supplies between the phase line and ground plane, the neutral line and ground plane and between phase and netural lines.

(2) For 3-phase supplies between phases, A to B, A to C, B to C and between each phase line and ground plane. Where a neutral line is present, additional measurements shall be made between netural and each phase and netural and ground plane.

13.3.4.2 Tests for Sea Systems Use (DC and AC systems)

a. For DC lines the transient voltage shall be measured between the positive line and zero volt return line, between the positive line and the ground plane and also between the zero volt return line and the ground plane.

b. For AC lines the transient voltage shall be measured:

(1) For single-phase supplies between the phase line and ground plane, the neutral line and ground plane and between lines.

(2) For 3-phase supplies between phases, A to B, A to C, B to C and between each phase line and ground plane.

Note: For test purposes the AC power fequency may be reduced to 50 Hz instead of the normal 60 Hz if the EUT can operate without degration at this frequency.

13.3.4.3 Tests for Aircraft Use (DC and AC systems)

a. For DC lines the transient voltage shall be measured between the positive line and zero volt return line, between the positive line and the ground plane and also between the zero volt return line and the ground plane.

b. For AC lines the transient voltage shall be measured:

(1) For single-phase AC lines the transient voltage shall be measured between the phase line and the neutral line, between the phase line and the ground plane and also between the neutral line and the ground plane.

(2) For 3-phase AC lines the transient voltage shall be measured between each of the phase lines, between each phase line to the ground plane, between each phase line to the neutral line and also between the neutral line and the ground plane.

13.3.4.4 The test method is detailed below:

a. The EUT shall be monitored for both contactor and functional switching as detailed in the EMC Test Plan.

b. The EUT shall be switched on and off by means of the EUT power switch (if fitted) and the external contactor. At least 20 switching operations shall be undertaken on each switch, 10 operations for +ve trigger and 10 for –ve trigger.

c. Functional switching due to EUT operation shall be performed until the test engineer is satisfied that the highest transient levels have been recorded. This shall cover the EUT's normal operating sequence and exercising the EUT through its full range of functions.

13.3.5 Data Presentation

Data presentation shall be as follows:

a. An automatically produced plot of amplitude versus time for each observed transient on each line tested shall be retained by the test house. Manually gathered data is not acceptable except for plot verification.

b. Examples of the transient plots giving the highest amplitudes will be included in any test report produced. Such plots will show suitable scaling graduation in both time and amplitude to enable an unambiguous comparison with the standard.

c. A table giving details of duration and amplitude of all transients observed, together with the applicable limit will be included in any test report produced.

d. Records of probe location, test condition, time/date of test, together with the name of the responsible test engineer (who performed the test) must be retained by the test house.

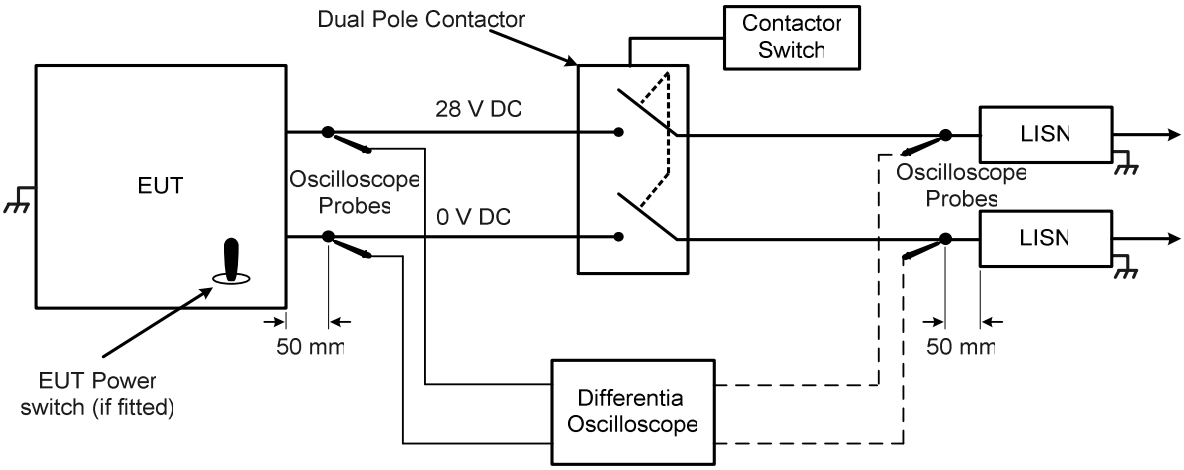

Figure NCE04-1 Typical Test Configuration, DC Supply

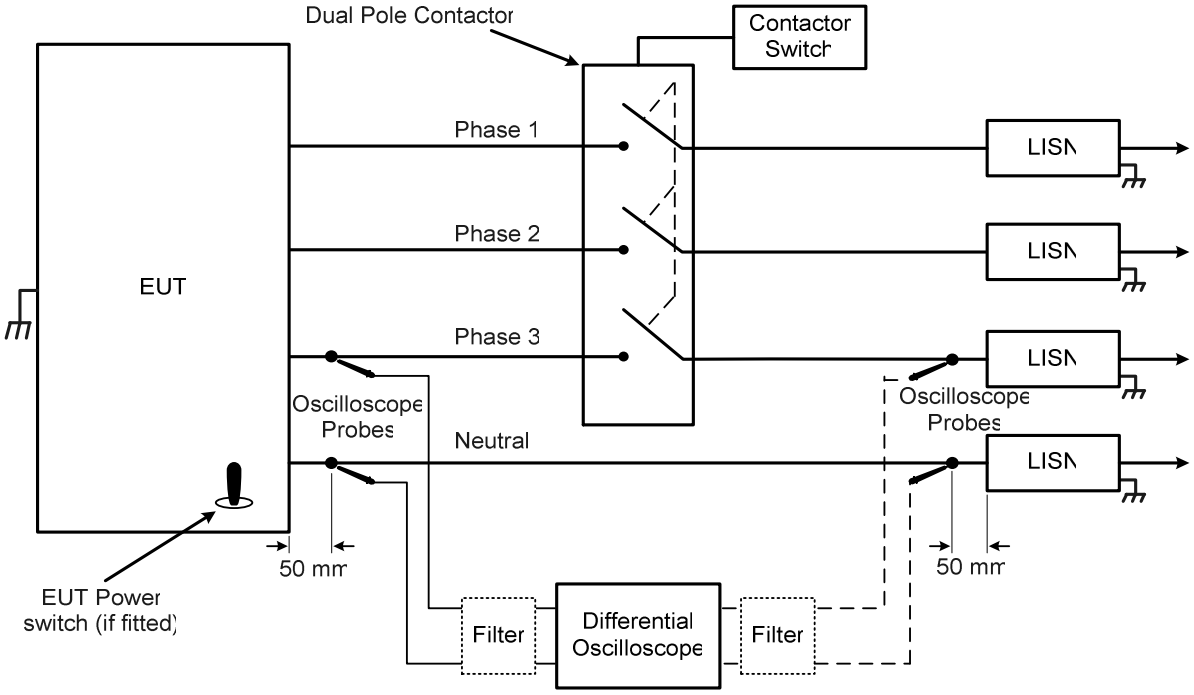

Figure NCE04-2 Typical Test Configuration, AC Supply Lines

14 NCE05 CONDUCTED EMISSIONS, POWER, SIGNAL AND CONTROL LEADS, 30 Hz to 150 MHz

14.1 NCE05 Applicability

This requirement is applicable for power leads, including returns, that obtain power from other sources not part of the EUT and for all signal and control leads (particular attention should be given to those cables that connect to other systems not part of the EUT) for Air, Land and Sea applications.

This test is not applicable to co-axial antenna feeders. Neither is it applicable to cables between units of the EUT which are shorter than 500 mm.

For AC applications, this requirement is applicable starting at the second harmonic of the EUT power frequency.

Reference should also be made to **Applicability Table 501-7** and **Clause 6.8** before subjecting the EUT to this test method.

Where some procuring authorities require testing to a higher frequency then NCE05 should be used.

14.2 NCE05 Limits

Conducted emissions on power, control and signal leads shall not exceed the applicable values shown on **Figure NCE05-1** for Air Applications, **Figure NCE05-2** for Land Applications and **Figure NCE05-3** for Sea Applications.

14.3 NCE05 Test Procedure

14.3.1 Purpose

This test procedure is used to verify that electromagnetic emissions from the EUT do not exceed the specified requirements for power input leads (including returns) and Signal and Control leads.

When cable looms split into more than one branch, then each branch shall be tested separately at a position of 50 mm from the connector at its end. Testing is required at all connectors above 30 MHz.

14.3.2 Test Equipment

The test equipment shall be as follows:

a. Measurement receivers
b. Current probes
c. Signal generator
d. Data recording device
e. Oscilloscope
f. Resistor (R)
g. 5μH LISNs

14.3.3 Setup

The test setup shall be as follows:

a. Maintain a basic test setup for the EUT as shown and described in **Figures 501-3** through to **501-6** and **Clause 4.3.8**. The 50μH LISN will need to be replaced with a 5μH

LISN as shown in **Figure 501-8** while meeting the characteristic curve shown in **Figure 501-10**.

b. Calibration. Configure the test setup for the measurement system check as shown in **Figure NCE05-4**.

c. EUT testing.

   i. Configure the test setup for compliance testing of the EUT as shown in **Figure NCE05-5** or **Figure NCE05-6** for power or control and signal lines repectively.

   ii. For power lead measurements position the current probe 50 mm from the LISN.

   iii. The current probe is positioned 50 mm from the EUT for signal, control and secondary power leads. Where the backshell of the connector prevents this then the probe will be positioned as close as possible and a record made of its exact location.

   iv. On signal, control and secondary power leads measurements above 30 MHz must be performed at both ends.

14.3.4 Procedures

The test procedures shall be as follows:

a. Turn on the measurement equipment and allow a sufficient time for stabilization.

b. Calibration. Evaluate the overall measurement system from the current probe to the data output device.

   i. Apply a calibrated signal level, which is at least 6 dB below the applicable limit at 1 kHz, 3 kHz, and 10 kHz, 100 kHz, 1 MHz, 10 MHz and 150 MHz to the current probe.

   ii. Verify the current level, using the oscilloscope and load resistor; also, verify that the current waveform is sinusoidal.

   iii. Scan the measurement receiver for each frequency in the same manner as a normal data scan. Verify that the data recording device indicates a level within ±3 dB of the injected level.

   iv. If readings are obtained which deviate by more than ±3 dB, locate the source of the error and correct the deficiency prior to proceeding with the testing.

c. EUT testing. Determine the conducted emissions from the EUT input power leads, signal and control leads plus secondary power leads including returns.

   i. Turn on the EUT and allow sufficient time for stabilization.

   ii. Select an appropriate lead for testing and clamp the current probe into position.

   iii. Scan the measurement receiver over the applicable frequency range, using the bandwidths and minimum measurement times specified in **Table 501-2**.

   iv. Repeat 14.3.4c(3) for each power, control and signal lead.

   Note: In some instances EUT's with high current requirements may fail to meet the limit due to the amplitude of AC power frequency harmonics, in such cases guidance should be sought from the procuring authority whether these failures are acceptable. Failures due to harmonic content are limited to a frequency of ten times the fundamental.

14.3.5 Data Presentation

Data presentation shall be as follows:

a. Continuously and automatically plot amplitude versus frequency profiles on X-Y axis outputs. Manually gathered data is not acceptable except for plot verification.

b. Display the applicable limit on each plot.

c. Provide a minimum frequency resolution of 1% or twice the measurement receiver bandwidth, whichever is less stringent, and a minimum amplitude resolution of 1 dB for each plot.

d. Provide plots for both the measurement and system check portions of the procedure.

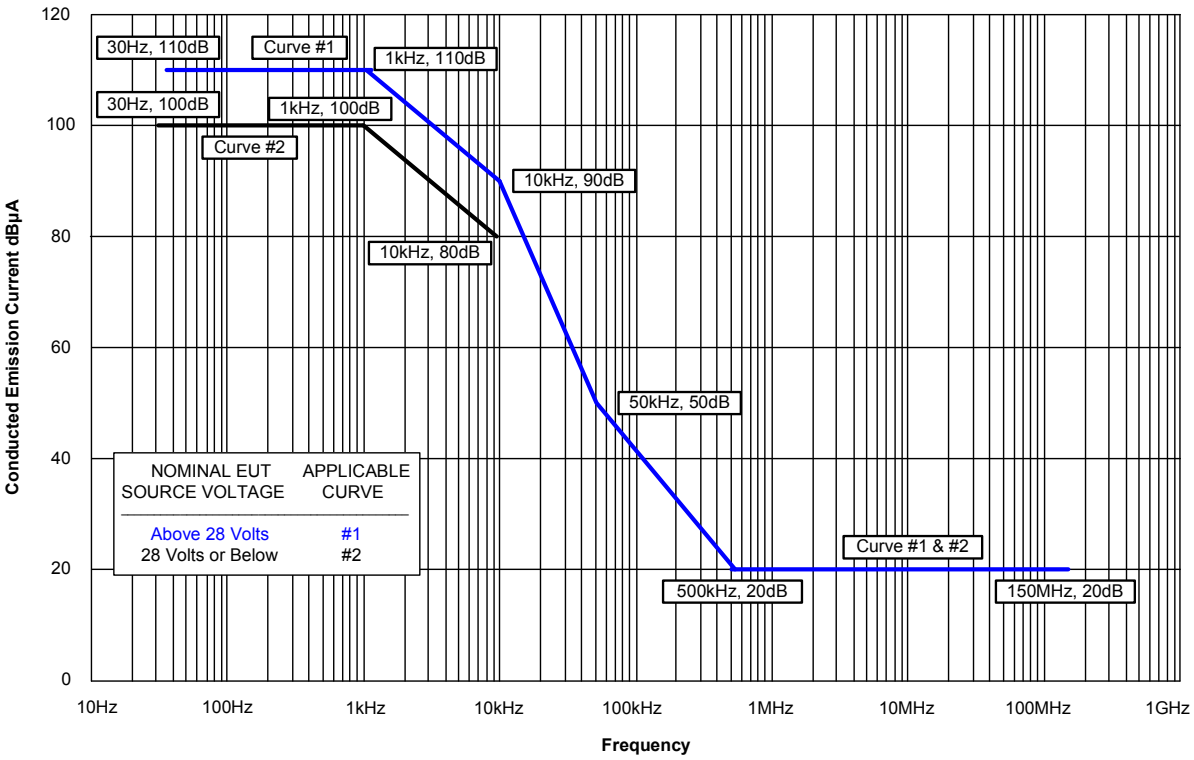

Figure NCE05-1 NCE05 Limits for Air Service Use

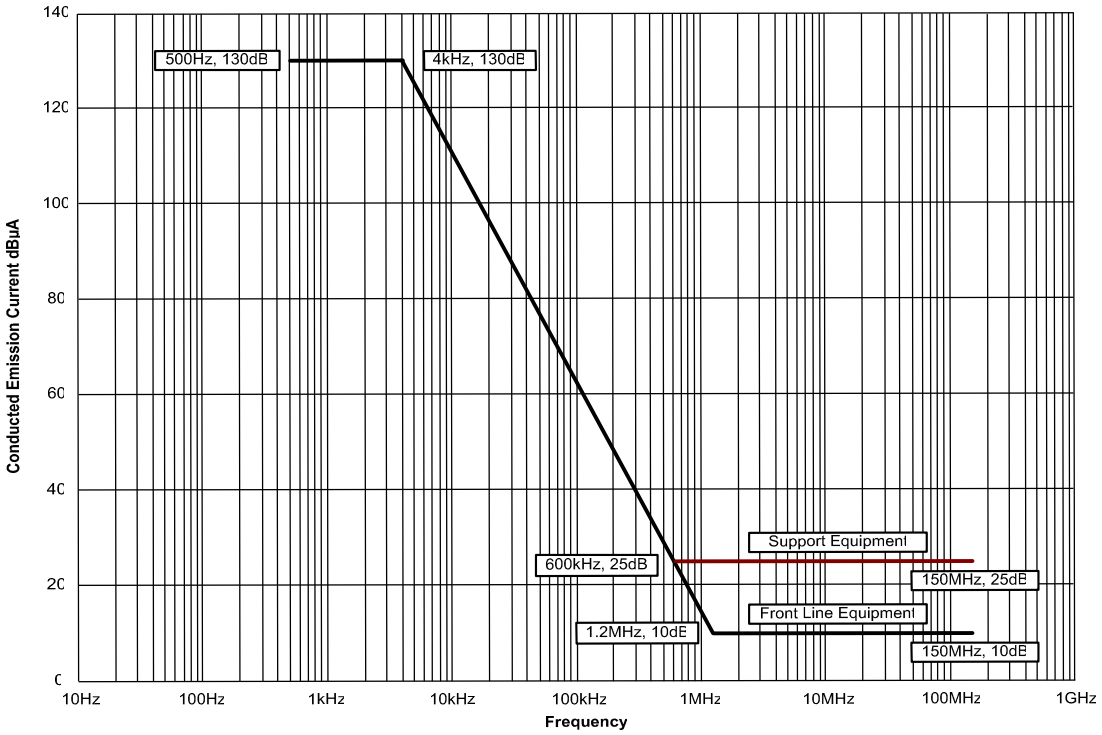

Figure NCE05-2 NCE05 Limits for Land Service Use

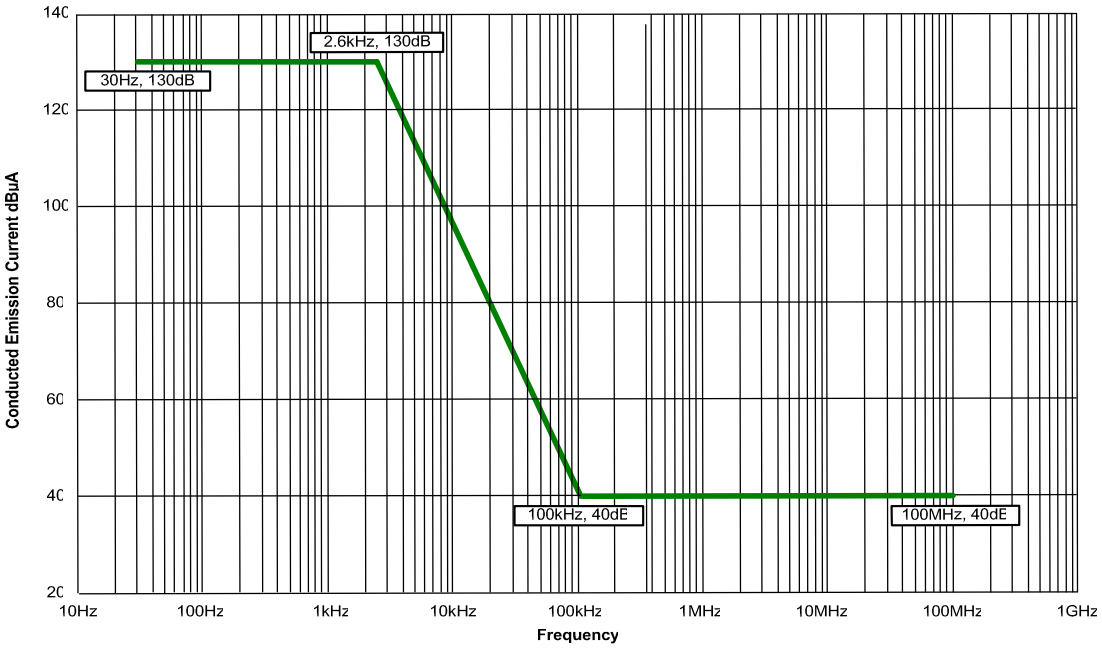

Figure NCE05-3 NCE05 Limits for Sea Service Use (DC, 60Hz, 400Hz)

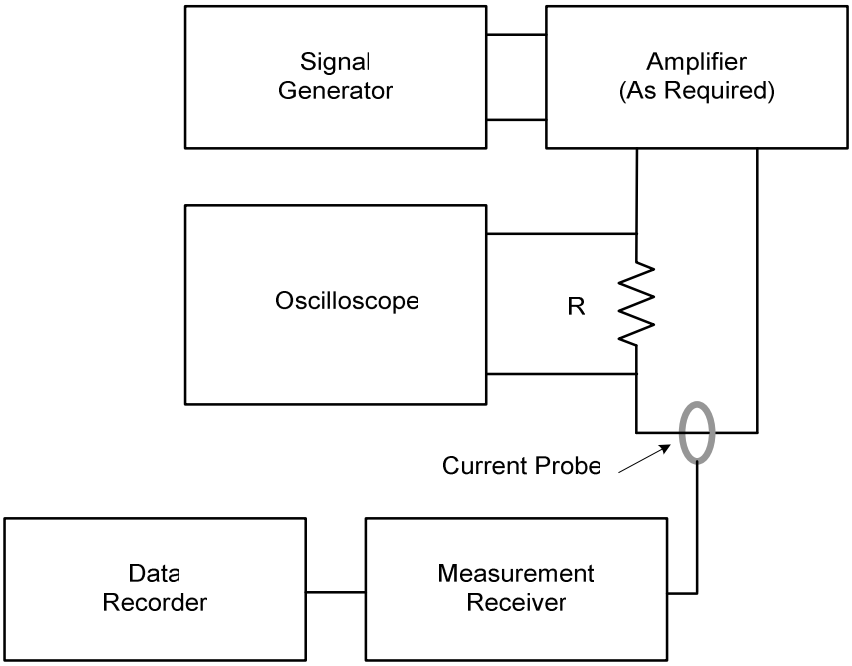

Figure NCE05-4 Measurement System Check

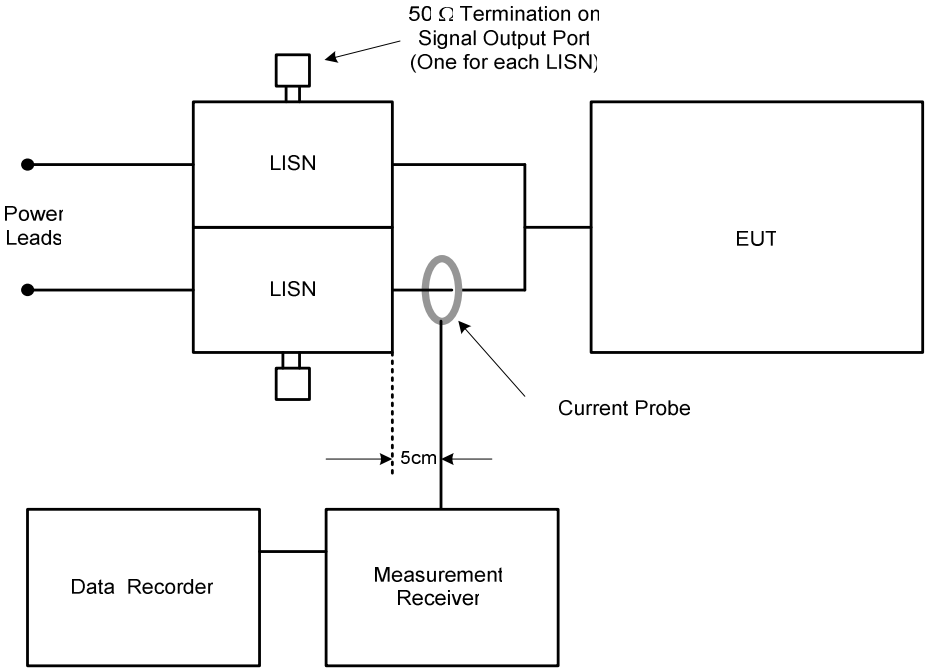

Figure NCE05-5 Measurement Setup for Power Leads

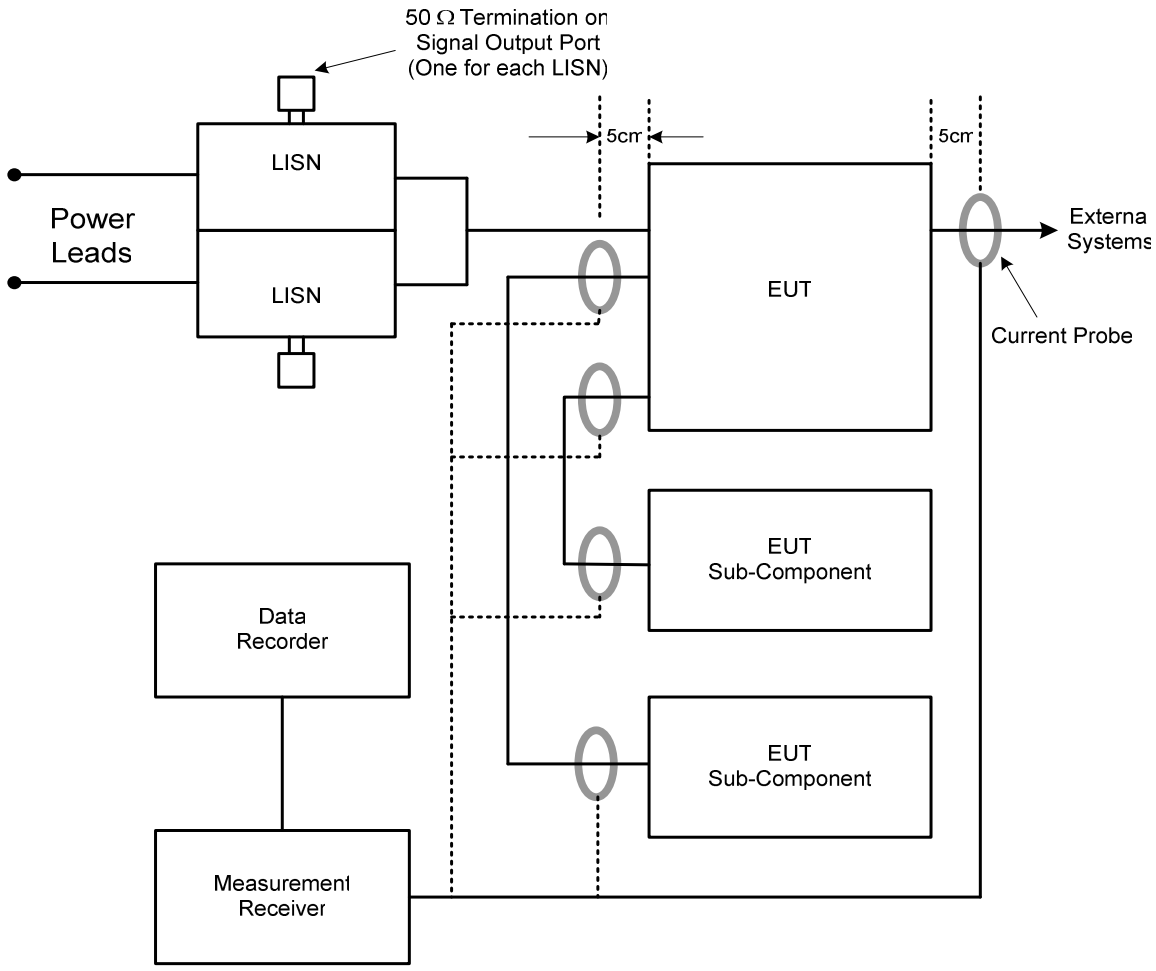

Figure NCE05-6 Measurement Setup for Signal and Control Leads

Note : Additional current probe positions shown with dashed lines.

15 NCS01 CONDUCTED SUSCEPTIBILITY, POWER LEADS, 30 Hz to 150 kHz

15.1 NCS01 Applicability

This requirement is applicable to equipment and subsystem AC, limited to current draws ≤ 100 amperes per phase and DC input power leads, not including returns. If the EUT is DC operated, this requirement is applicable over the frequency range of 30 Hz to 150 kHz. If the EUT is AC operated, this requirement is applicable starting from the second harmonic of the EUT power frequency and extending to 150 kHz. Reference should also be made to **Clause 6.9**.

Note. If test NCS07 is also to be performed on the EUT at the same time then it is permissible to limit the upper frequency of this test to 50 KHz.

15.2 NCS01 Limit

The EUT shall not exhibit any malfunction, degradation of performance, or deviation from specified indications, beyond the tolerances indicated in the individual equipment or subsystem specification, when subjected to a test signal with voltage levels as specified in **Figure NCS01-1**. The requirement is also met when the power source is adjusted to dissipate the power level shown in **Figure NCS01-2** in a 0.5 Ω load and the EUT is not susceptible.

15.3 NCS01 Test Procedure

15.3.1 Purpose

This test procedure is used to verify the ability of the EUT to withstand signals coupled onto input power leads.

15.3.2 Test Equipment

The test equipment shall be as follows:

a. Signal generator

b. Power amplifier

c. Oscilloscope

d. Coupling transformer

e. Capacitor, 10 μF

f. Isolation transformer

g. Resistor, 0.5 Ω

h. LISNs

15.3.3 Setup

The test setup shall be as follows:

a. Maintain a basic test setup for the EUT as shown and described in **Figures 501-3** through to **501-6** and **Clause 4.3.8**.

b. Calibration. Configure the test equipment in accordance with **Figure NCS01-3**. Set up the oscilloscope to monitor the voltage across the 0.5 Ω resistor.

c. EUT testing.

(1) For DC or single phase AC power, configure the test equipment as shown in **Figure NCS01-4**.

(2) For three phase ungrounded power, configure the test setup as shown in **Figure NCS01-5**.

(3) For three phase wye power (four power leads), configure the test setup as shown in **Figure NCS01-6**.

15.3.4 Procedures

The test procedures shall be as follows:

a. Turn on the measurement equipment and allow sufficient time for stabilization.

b. Calibration.

(1) Set the signal generator to the lowest test frequency.

(2) Increase the applied signal until the oscilloscope indicates the voltage level corresponding to the maximum required power level specified in **Figure NCS01-2**. Verify the output waveform is sinusoidal.

(3) Record the setting of the signal source.

(4) Scan the required frequency range for testing and record the signal source setting needed to maintain the required power level.

c. EUT Testing.

(1) Turn on the EUT and allow sufficient time for stabilization. CAUTION: Exercise care when performing this test since the "safety ground" of the oscilloscope is disconnected due to the isolation transformer and a shock hazard may be present.

(2) Set the signal generator to the lowest test frequency. Increase the signal level until the required voltage or power level is reached on the power lead. (Note: Power is limited to the level calibrated in 15.3.4b(2)).

(3) While maintaining at least the required signal level, scan through the required frequency range at a rate no greater than specified in **Table 501-3**.

(4) Susceptibility evaluation.

(a) Monitor the EUT for degradation of performance.

(b) If susceptibility is noted, determine the threshold level in accordance with **Clause 4.3.10.4.3** and verify that it is above the limit.

(5) Repeat 15.3.4c(2) through 15.3.4c(4) for each power lead, as required. For three phase ungrounded power, the measurements shall be made according to the following table:

Coupling Transformer in Line	Voltage Measurement From
A	A to B
B	B to C
C	C to A

Table NCS01-1 3 Phase Ungrounded Power

For three phase wye power (four leads) the measurements shall be made according to the following table:

Coupling Transformer in Line	Voltage Measurement From
A	A to neutral
B	B to neutral
C	C to neutral

Table NCS01-2 3 Phase Wye Power

15.3.5 Data Presentation

Data presentation shall be as follows:

a. Provide graphical or tabular data showing the frequencies and amplitudes at which the test was conducted for each lead.

b. Provide data on any susceptibility thresholds and the associated frequencies that were determined for each power lead.

c. Provide indications of compliance with the applicable requirements for the susceptibility evaluation specified in 3.4c for each lead.

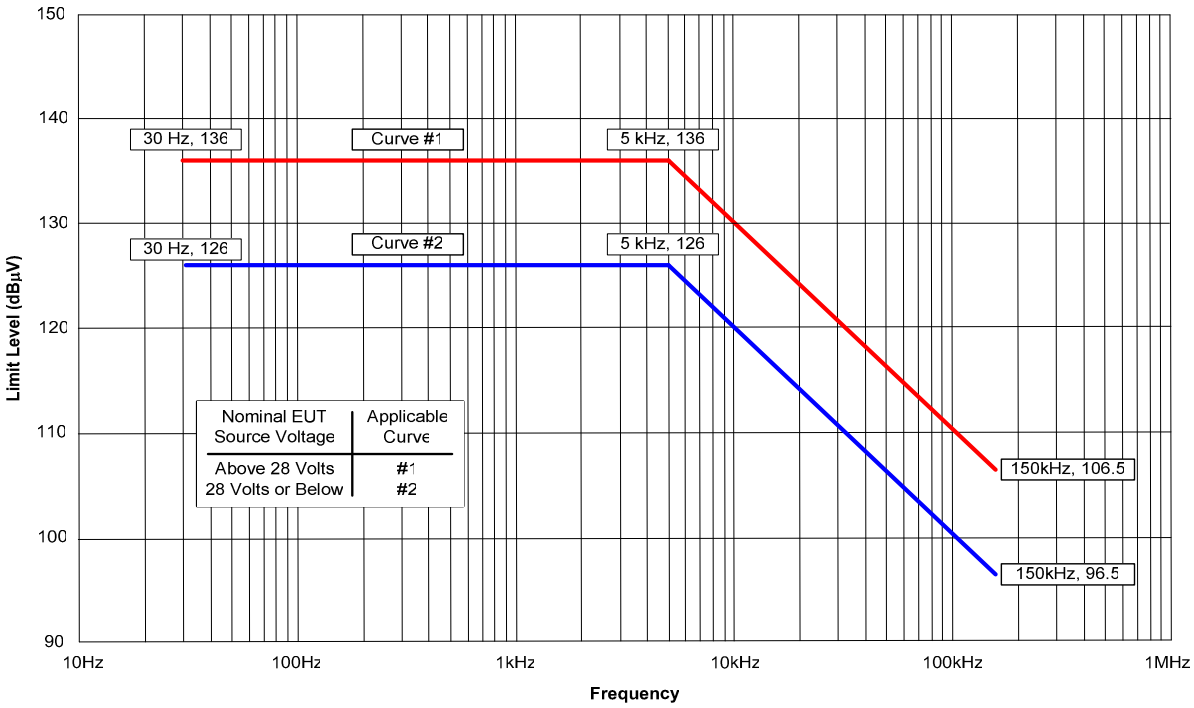

Figure NCS01-1 Voltage Limit for all Applications

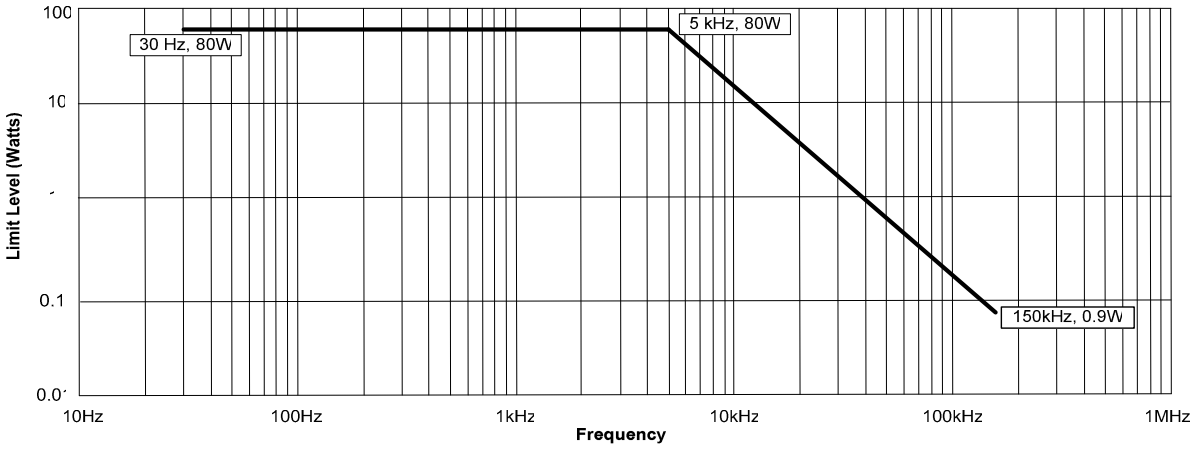

Figure NCS01-2 Power Limit for all Applications

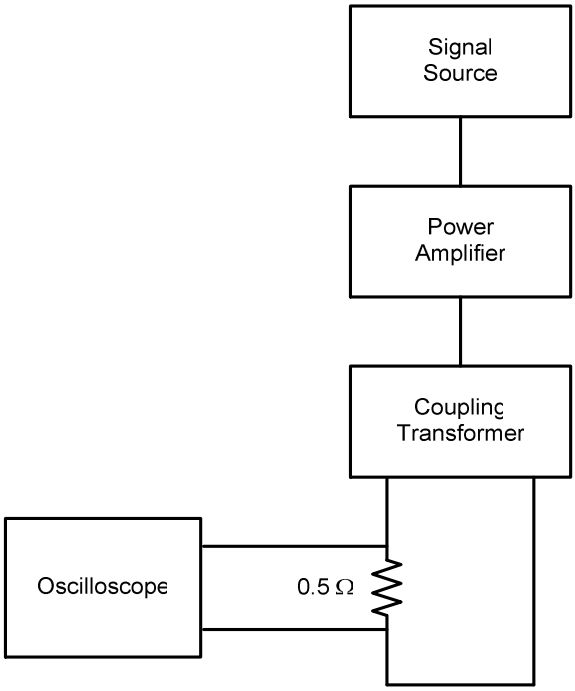

Figure NCS01-3 Calibration

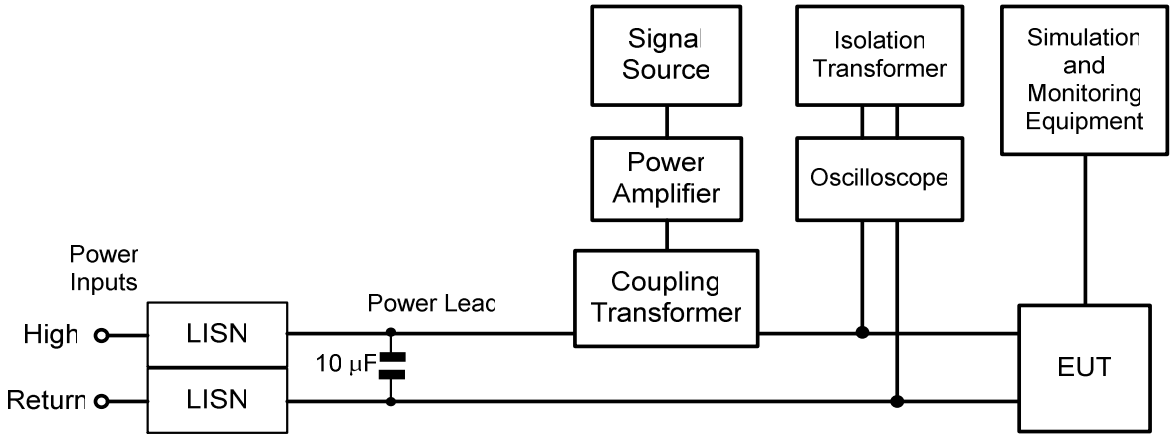

Figure NCS01-4 Signal Injection, DC or Single Phase AC

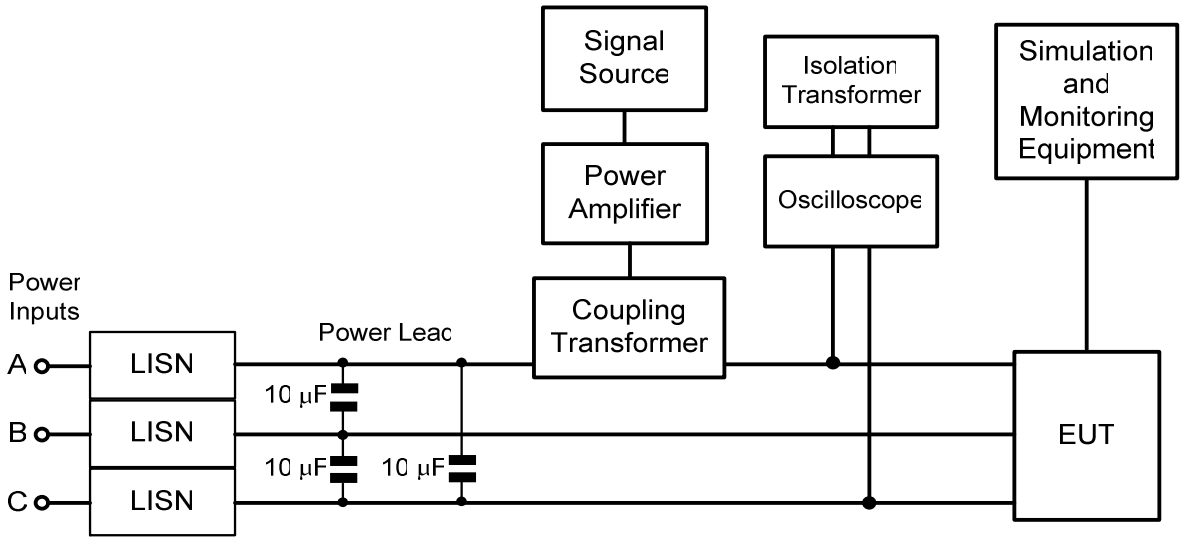

Figure NCS01-5 Signal Injection, 3-Phase Ungrounded

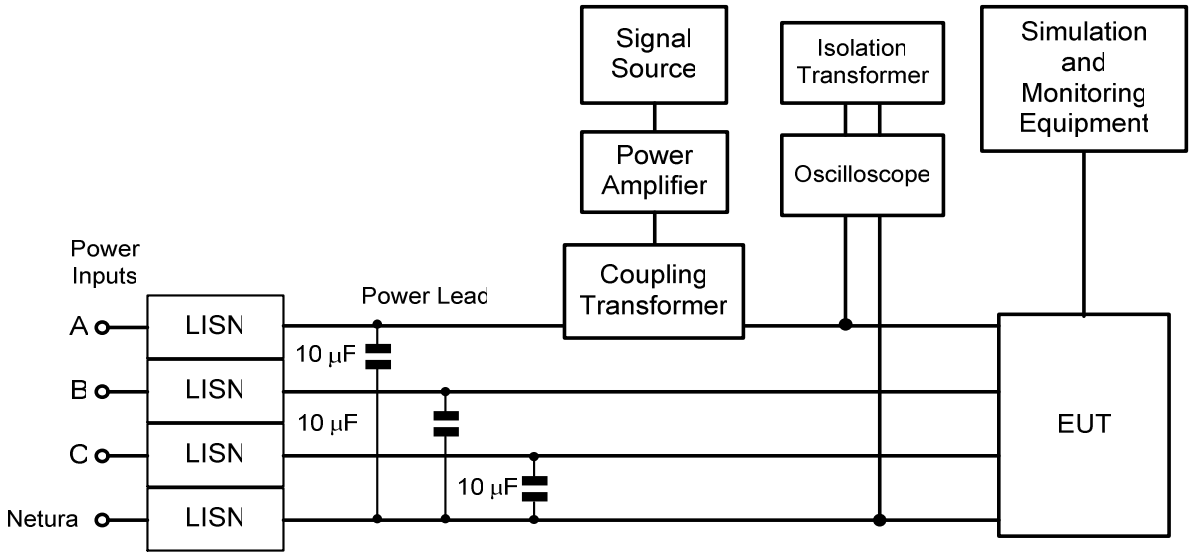

Figure NCS01-6 Signal Injection, 3-Phase Wye

16 NCS02 CONDUCTED SUSCEPTIBILITY, CONTROL AND SIGNAL LEADS, 20 Hz to 50 kHz

16.1 NCS02 Applicability

This test is applicable to all interconnecting or control and signals leads (1 m or greater in length) connected to the EUT. Reference should also be made to **Clause 6.10**.

16.2 NCS02 Limits

Limits are shown in **Figures NCS02-1** for Air application and **NCS02-2**, for both Sea and Land service application, respectively.

For the airside, the frequency range of the enhanced limit (146dBµA), may need to be adjusted depending on the frequency range of the aircraft's AC power system e.g. if the equipment is installed on aircraft whose primary power is variable over a frequency range of 350 Hz – 800 Hz then the enhanced limit should cover this band.

16.3 NCS02 Test Procedure

16.3.1 Purpose

The purpose of this test is to confirm that audio frequency currents, which are likely to be flowing in cables adjacent to the EUT control and signal lines, do not cause malfunction of the EUT. Audio systems can be especially sensitive to this test.

16.3.2 Test Equipment

The test equipment shall be as follows:

a. Signal generator

b. Power amplifier, low output impedance

c. Ammeter

d. Capacitor, 30000 µF

e. 5 µH or 50 µH LISNs

16.3.3 Setup

The test setup shall be as follows:

a. A typical test layout is shown in Figure NCS02-3**.**

16.3.4 Procedures

The test procedures shall be as follows:

a. The test wire shall be closely coupled to each cable bundle to be tested by wrapping an insulated current carrying wire spiralling at a two turns per meter equally spaced and running the whole length of the cable bundle to within 15cms of each end connector.

b. The test wire shall be energised with the specified current over the required frequency range and monitored by means of a suitable method and device (e.g. ammeter/test receiver, voltmeter/resistor, current probe, etc.) capable of measuring up to 50 kHz.

c. Should malfunctions be found during this test the current shall be reduced until the threshold is established and then recorded.

16.3.5 Data Presentation

Data presentation shall be as follows:

a. Any malfunction, failure or damage of the equipment shall be investigated and recorded in the test report.

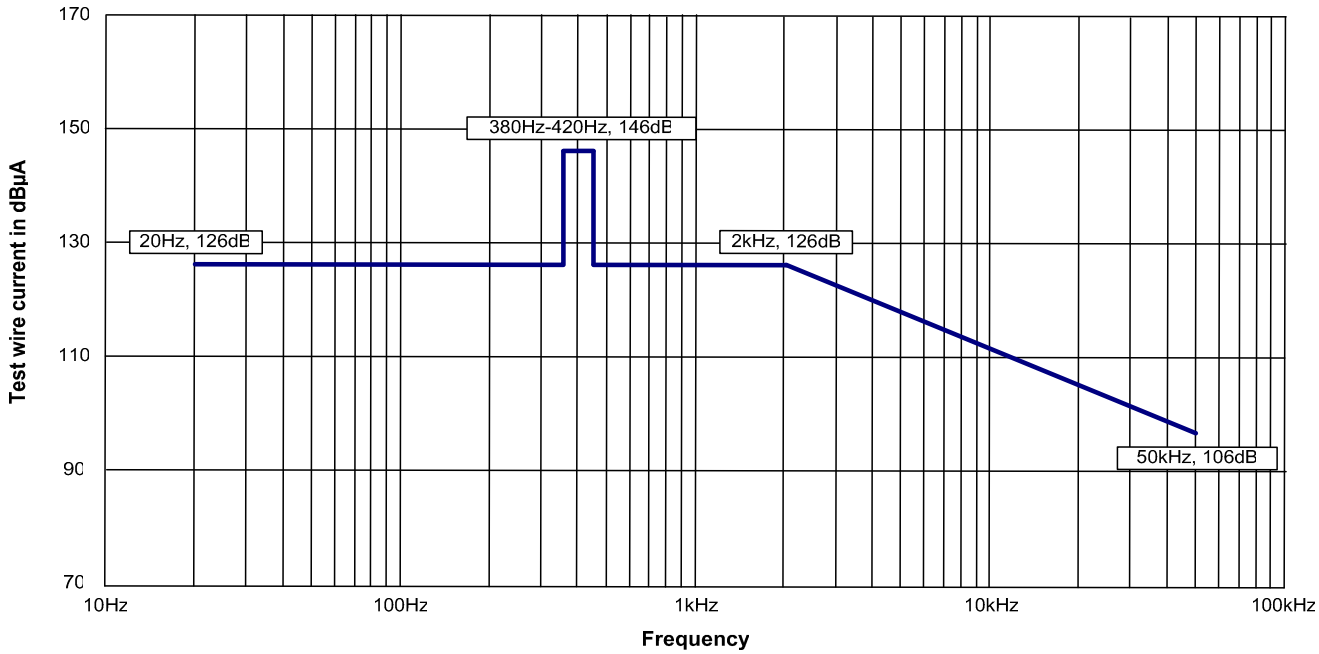

Figure NCS02-1 Limit for Air Application

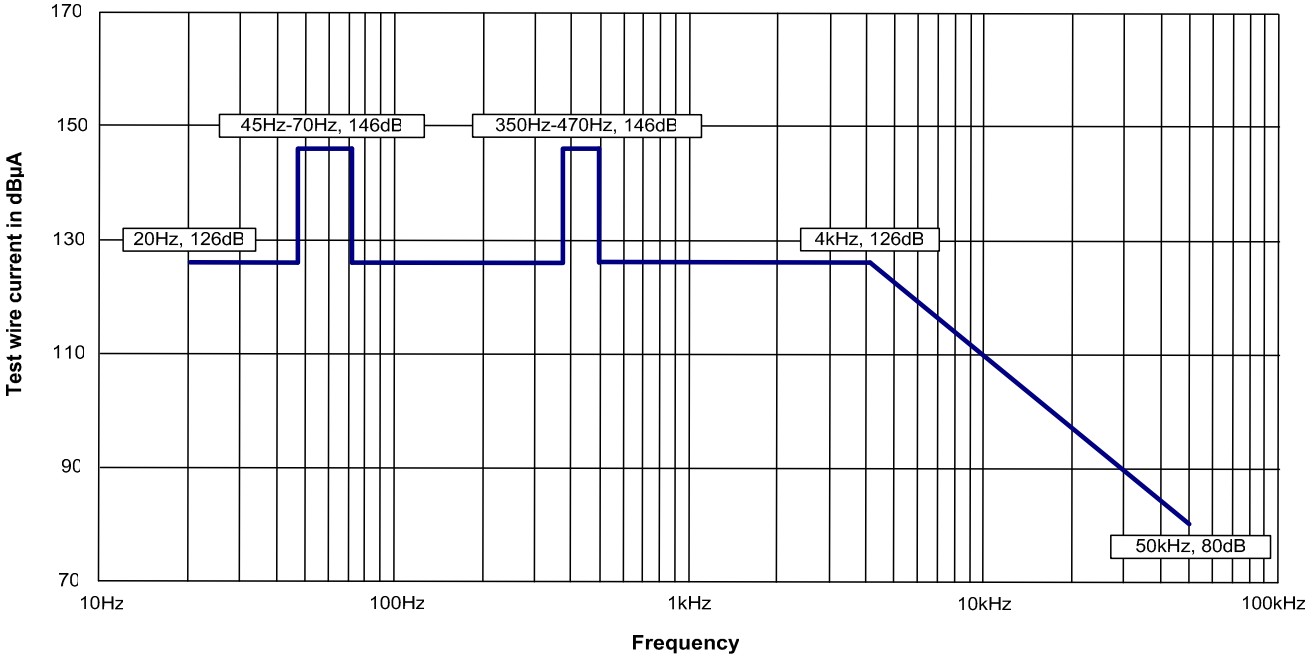

Figure NCS02-2 Limit for Land and Sea Application

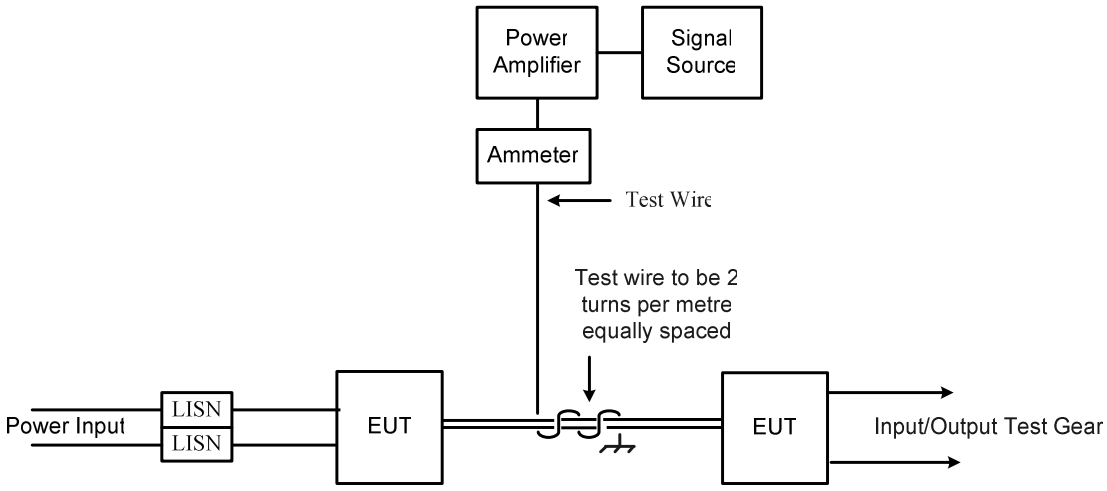

Figure NCS02-3 Basic Test Setup

17 NCS03 CONDUCTED SUSCEPTIBILITY, ANTENNA PORT, INTERMODULATION 15 kHz to 10 GHz

17.1 NCS03 Applicability

This receiver front-end susceptibility requirement is applicable to equipment and subsystems, such as communications receivers, RF amplifiers, transceivers, radar receivers, acoustic receivers, and electronic warfare receivers as specified in the individual procurement specification.

17.2 NCS03 Limit

The EUT shall not exhibit any intermodulation products beyond specified tolerances when subjected to the limit requirement provided in the individual procurement specification.

17.3 NCS03 Test Procedures

17.3.1 Purpose

This test procedure is used to determine the presence of intermodulation products that may be caused by undesired signals at the EUT antenna input terminals.

17.3.2 Test Requirements

The required test equipment, setup, procedures, and data presentation shall be determined on a case-by-case basis in accordance with the guidance provided in **Clause 6.11**.

18 NCS04 CONDUCTED SUSCEPTIBILITY, ANTENNA PORT, REJECTION of UNDESIRED SIGNALS, 30 Hz to 20 GHz

18.1 NCS04 Applicability

This receiver front-end susceptibility requirement is applicable to equipment and subsystems, such as communications receivers, RF amplifiers, transceivers, radar receivers, acoustic receivers, and electronic warfare receivers as specified in the individual procurement specification.

18.2 NCS04 Limit

The EUT shall not exhibit any undesired response beyond specified tolerances when subjected to the limit requirement provided in the individual procurement specification.

18.3 NCS04 Test Procedures

18.3.1 Purpose

This test procedure is used to determine the presence of spurious responses that may be caused by undesired signals at the EUT antenna input terminals.

18.3.2 Test Requirements

The required test equipment, setup, procedures, and data presentation shall be determined on a case-by-case basis in accordance with the guidance provided in **Clause 6.12**.

19 NCS05 CONDUCTED SUSCEPTIBILITY, ANTENNA PORT, CROSS MODUULATION 30 Hz to 20 GHz

19.1 NCS05 Applicability

This receiver front-end susceptibility requirement is applicable only to receivers that normally process amplitude-modulated RF signals, as specified in the individual procurement specification.

19.2 NCS05 Limit

The EUT shall not exhibit any undesired response, due to cross modulation, beyond specified tolerances when subjected to the limit requirement provided in the individual procurement specification.

19.3 NCS05 Test Procedures

19.3.1 Purpose

This test procedure is used to determine the presence of cross-modulation products that may be caused by undesired signals at the EUT antenna terminals.

19.3.2 Test Requirements

The required test equipment, setup, procedures, and data presentation shall be determined in accordance with the guidance provided in **Clause 6.13**.

20 NCS06 CONDUCTED SUSCEPTIBILIY STRUCTURE CURRENT, 60 Hz to 100 kHz

20.1 NCS06 Applicability

This requirement is applicable to equipment and subsystems that have an operating frequency range of 100 kHz or less and an operating sensitivity of 1 µV or better (such as 0.5 µV). Handheld equipment is exempt from this requirement. Reference should also be made to **Clause 6.14**.

20.2 NCS06 Limit

The EUT shall not exhibit any malfunction, degradation of performance, or deviation from specified indications, beyond the tolerances indicated in the individual equipment or subsystem specification, when subjected to the values shown on **Figure NCS06-1**.

20.3 NCS06 Test Procedures

20.3.1 Purpose

This test procedure is used to verify the ability of the EUT to withstand structure currents.

20.3.2 Test Equipment

The test equipment shall be as follows:

a. Signal generator

b. Amplifier (if required)

c. Isolation transformers

d. Current probe

e. Measurement receiver

f. Resistor, 0.5 Ω

g. Coupling transformer

20.3.3 Setup

The test setup shall be as follows:

a. It is not necessary to maintain the basic test setup for the EUT as shown and described in **Figures 502-3** through to **501-6** and **Clause 4.3.8**.

b. Calibration. No special calibration is required.

c. EUT testing.

(1) As shown in **Figure NCS06-2**, configure the EUT and the test equipment (including the test signal source, the test current measurement equipment, and the equipment required for operating the EUT or measuring performance degradation) to establish a single-point ground for the test setup using the EUT ground terminal.

(i) Using isolation transformers, isolate all AC power sources. For DC power, isolation transformers are not applicable.

(ii) Disconnect the safety ground leads of all input power cables.

(iii) Place the EUT and the test equipment on non-conductive surfaces to enable a single point ground to be established.

(2) The test points for the injected currents shall be as follows:

(i) Equipment that will not be rack mounted. At diagonal extremes across only the mounting surface.

(ii) Rack mounted equipment. At diagonal extremes across all surfaces of the equipment.

(iii) Deck resting equipment. At diagonal extremes across all surfaces of the equipment.

(iv) Bulkhead mounted equipment. At diagonal extremes across rear surface of the equipment.

(v) Cables (all mounting methods). Between cable armour, which is terminated at the EUT, and the single point ground established for the test setup. This requirement shall also apply to cable shields and conduit, unless they have a single point ground.

(3) Connect the signal generator and resistor to a selected set of test points. Attachment to the test points shall be by conductors that are perpendicular to the test surface for a length of at least 50 cm.

20.3.4 Procedures

The test procedures shall be as follows:

a. Turn on the EUT and measurement equipment and allow sufficient time for stabilisation.

b. Set the signal generator to the lowest required frequency. Adjust the signal generator to the required level as a minimum. Monitor the current with the current probe and measurement receiver.

c. Scan the signal generator over the required frequency range in accordance with **Table 501-3** while maintaining the current level at least to the level specified in the applicable limit. Monitor the EUT for susceptibility.

d. If susceptibility is noted, determine the threshold level in accordance with **Clause 4.3.10.4.3** and verify that it is above the applicable limit.

e. Repeat 20.3.4b through 20.3.4d for each diagonal set of test points on each surface of the EUT to be tested.

20.3.5 Data Presentation

Data presentation shall be as follows:

a. Provide a table showing the mode of operation, susceptible frequency, current threshold level, current limit level, and susceptible test points.

b. Provide a diagram of the EUT showing the location of each set of test points.

Figure NCS06-1 Limit for all Applications

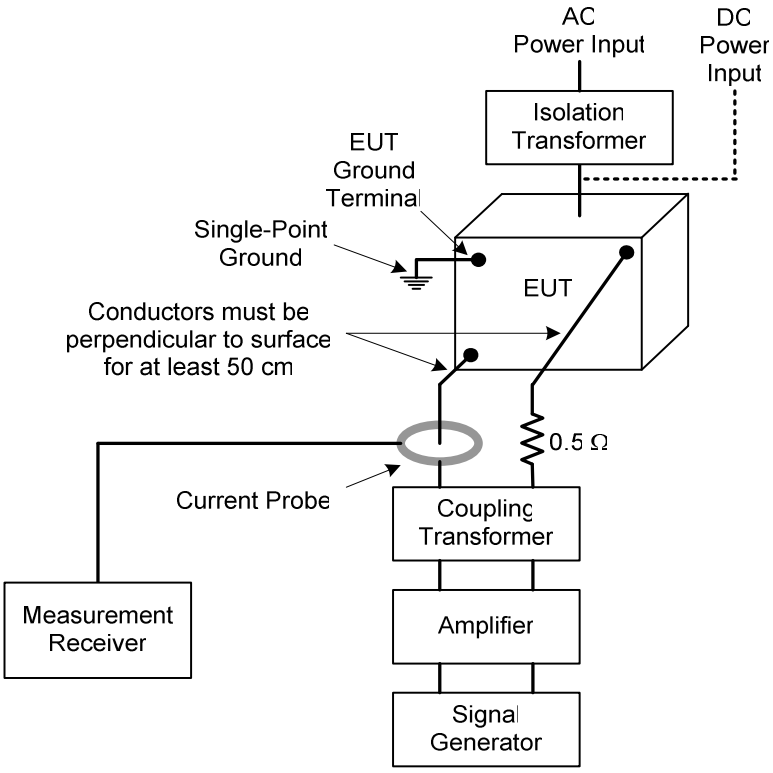

Figure NCS06-2 Test Configuration

21 NCS07 CONDUCTED SUSCEPTIBILITY, BULK CURRENT INJECTION, 10 kHz to 200 MHz

21.1 NCS07 Applicability

This requirement is applicable to all interconnecting cables, including power cables. Reference should also be made to **Clause 6.15**.

The purpose of this test is to confirm that RF signals in the range 10 kHz to 200 MHz, when coupled on to the interconnecting cable looms and power supply lines of an EUT, will not cause a degradation in performance. In addition this test will provide an amplitude/frequency malfunction signature for the system which, when compared with the levels of current on the looms (or cables) caused by onboard and external transmitting sources measured during clearance trials, will assist in the establishment of adequate safety margins.

a. Cable looms which connect the EUT to other equipments in the total system (including primary power lines) and those interconnecting units of the EUT are subject to this test. Cable looms can be tested as a whole or individual wires can be tested.

Note

1 For a system with built in redundancy, e.g. a quadruplex flight control system, simultaneous injections on several looms may be required by the Project Manager.

2 Window effect testing will normally be conducted following testing performed at the requirement test. See **Clause 4.3.10.4.1**.

21.2 NCS07 Limit

The EUT shall not exhibit any malfunction, degradation of performance, or deviation from specified indications beyond the tolerances indicated in the individual equipment or subsystem specification, when subjected to an injection probe drive level which has been pre-calibrated to the appropriate current limit shown in **Figure NCS07-1** and is modulated as specified below. The appropriate limit curve in **Figure NCS07-1** shall be selected from **Table NCS07-1**. For EUTs intended to be installed on Ships or submarines, an additional common mode limit of 77 dBμA is applicable from 4 kHz to 1 MHz on complete power cables (highs and returns – common mode test). Requirements are also met if the EUT is not susceptible at forward power levels sensed by the directional coupler that are below those determined during calibration provided that the actual current induced in the cable under test is 6 dB or greater than the calibration limit.

The requirement is not applicable for coaxial cables to antenna ports of antenna connected receivers expect for surface ships and submarines.

21.3 NCS07 Test Procedures

21.3.1 Purpose

This test procedure is used to verify the ability of the EUT to withstand RF signals coupled onto EUT associated cabling.

21.3.2 Test Equipment

The test equipment shall be as follows:

a. Measurement receivers

b. Current injection probes (maximum insertion loss shown in **Figure NCS07-2**, minimum insertion loss is recommended, not required. Reference should also be made **Figure 501-21** and **Clause 6.14**.

c. Current probes

d. Calibration fixture: coaxial transmission line with 50 Ω characteristic impedance, coaxial connections on both ends, and space for an injection probe around the centre conductor.

e. Directional couplers

f. Signal generators

g. Plotter

h. Attenuators, 50 Ω

i. Coaxial loads, 50 Ω

j. Power amplifiers

k. 50 µH LISNs

21.3.3 Setup

The test setup shall be as follows:

a Maintain a basic test setup for the EUT as shown and described in **Figures 501-3** through to **501-6** and **Clause 4.3.8**.

b Calibration. Configure the test equipment in accordance with **Figure NCS07-3** for calibrating injection probes.

(1) Place the injection probe around the centre conductor of the calibration fixture.

(2) Terminate one end of the calibration fixture with a 50 Ω load and terminate the other end with an attenuator connected to measurement receiver A.

c EUT Testing. Configure the test equipment as shown in **Figure NCS07-4** for testing.

(1) Place the injection and monitor probes around a cable bundle interfacing with a EUT connector.

(2) To minimize errors, maintain the same signal circuit that was used for calibration between the attenuator at the calibration fixture (oscilloscope, coaxial cables, bulkhead connectors, additional attenuators, etc.) and connect the circuit to the monitor probe. Additional attenuation may be used, if necessary.

(3) Locate the monitor probe 5 cm from the connector. If the overall length of the connector and backshell exceeds 5 cm, position the monitor probe as close to the connector's backshell as possible.

(4) Position the injection probe 5 cm from the monitor probe.

21.3.4 Procedures

The test procedures shall be as follows:

a Turn on the measurement equipment and allow sufficient time for stabilization.

b Calibration: Perform the following procedures using the calibration setup.

(1) Set the signal generator to 10 kHz, unmodulated.

(2) Increase the applied signal until measurement receiver A indicates the current level specified in the applicable limit is flowing in the center conductor of the calibration fixture.

(3) Record the "forward power" to the injection probe indicated on measurement receiver B.

(4) Scan the frequency band from 10 kHz to 200 MHz and record the forward power needed to maintain the required current amplitude.

c EUT Testing: Perform the following procedures on each cable bundle interfacing with each electrical connector on the EUT including complete power cables (high sides and returns). Also perform the procedures on power cables with the power returns and chassis grounds (green wires) excluded from the cable bundle. For connectors, which include both interconnecting leads and power, perform the procedures on the entire bundle, on the power leads (including returns and grounds) grouped separately, and on the power leads grouped with the returns and grounds removed.

(1) Turn on the EUT and allow sufficient time for stabilization.

(2) Susceptibility evaluation.

(a) Set the signal generator to 10 kHz with 1 kHz pulse modulation, 50% duty cycle.

(b) Apply the forward power level determined under **21.3.4b(4)** to the injection probe while monitoring the induced current.

(c) Scan the required frequency range in accordance with **Table 501-3** and **Clause 4.3.10.4** while maintaining the forward power level at the calibration level determined under **21.3.4b(4)**, or the maximum current level for the applicable limit, whichever is less stringent.

(d) Monitor the EUT for degradation of performance during testing.

(e) Whenever susceptibility is noted, determine the threshold level in accordance with **Clause 4.3.10.4.3** and verify that it is above the applicable requirement.

(f) For EUTs with redundant cabling for safety critical reasons such as multiple data buses, use simultaneous multi-cable injection techniques.

21.3.5 Data Presentation

Data presentation shall be as follows:

a. Provide amplitude versus frequency plots for the forward power levels required to obtain the calibration level as determined in **Clause 3.4b**.

b. Provide tables showing scanned frequency ranges and statements of compliance with the requirements for the susceptibility evaluation of **Clause 3.4c(2)** for each interface connector. Provide any susceptibility thresholds that were determined, along with their associated frequencies.

		LIMIT CURVE NUMBERS SHOWN IN FIGURE NCS07-1							
Platform / Frequency Range		Aircraft (External or Safety Critical)	Aircraft Internal	All Ships (Above Decks) and Submarines (External)*	Ships (Metallic) (Below Deck) **	Ship (Non Metallic) (Below Deck)	Submarine (Internal)	Ground	Space
4 kHz to 1 MHz	N	-	-	77 dBµA	77 dBµA	77 dBµA	77 dBµA	-	-
10 kHz to 2 MHz	A	5	5	2	2	2	1	3	3
	N	5	3	2	2	2	1	2	3
	AF	5	3	-	-	-		2	3
2 MHz to 30MHz	A	5	5	5	2	4	1	4	3
	N	5	5	5	2	4	1	2	3
	AF	5	3	-	-	-		2	3
30 MHz to 200 MHz	A	5	5	5	2	2	2	4	3
	N	5	5	5	2	2	2	2	3
	AF	5	3	-	-	-		2	3
KEY A = Army N = Navy AF = Air Force									

* For equipment located external to the pressure hull of a submarine but within the superstructure use Ships (Metallic) (Below Beck)

** For equipment located in the hanger deck of Aircraft Carriers

Table NCS07-1 Limit Curves

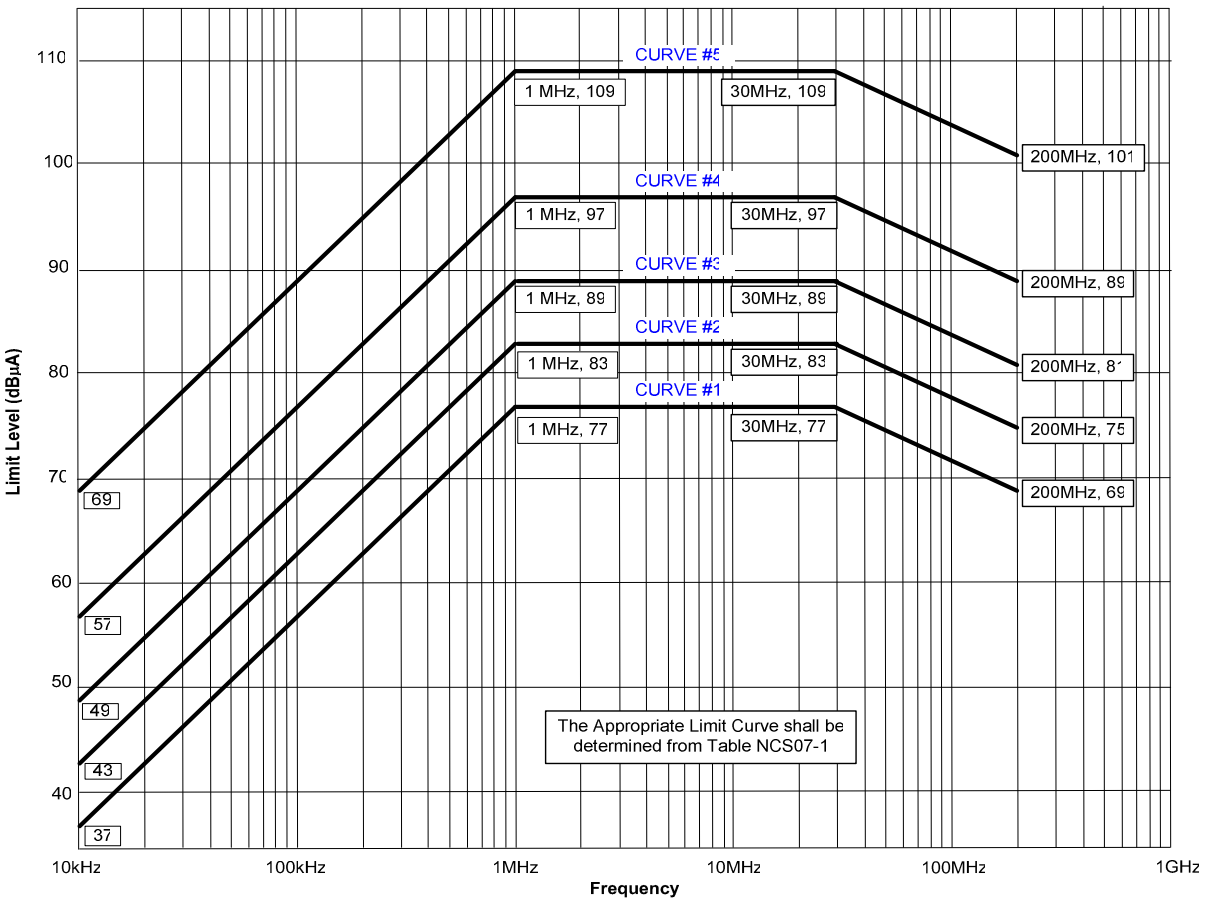

Figure NCS07-1 Calibration Limit for all Applications

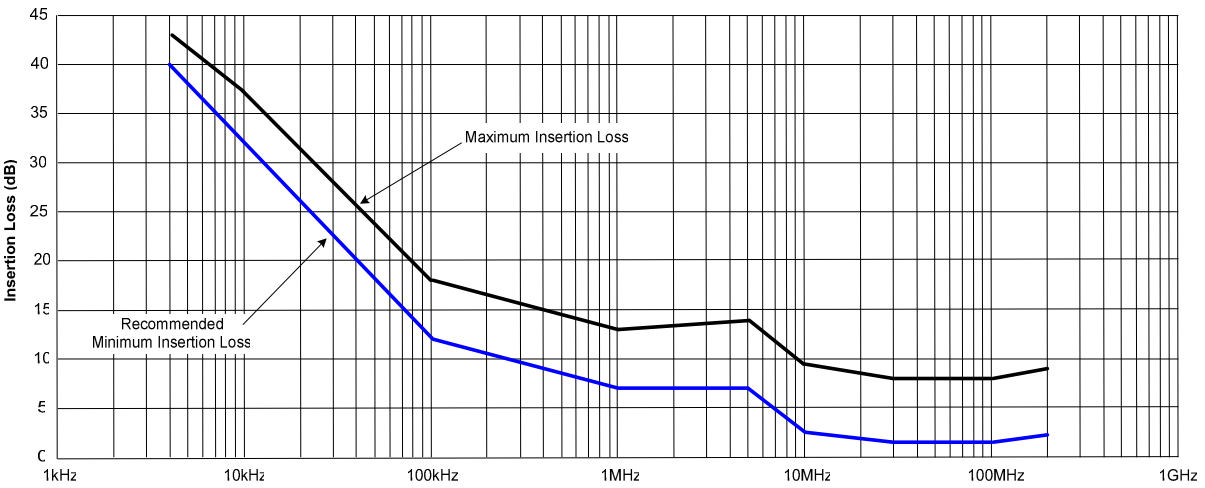

Figure NCS07-2 Maximum Insertion Loss for Injection Probes

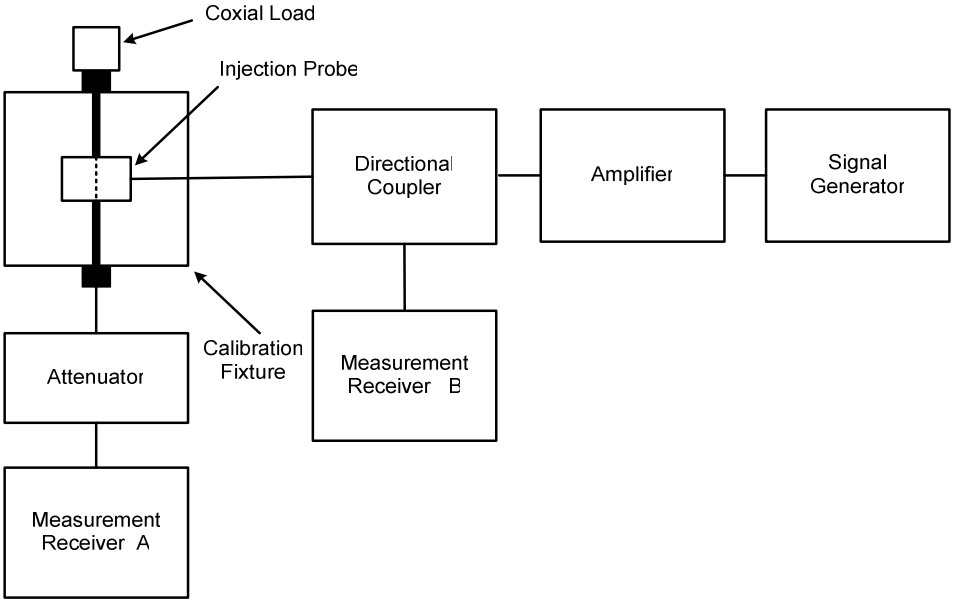

Figure NCS07-3 Calibration Setup

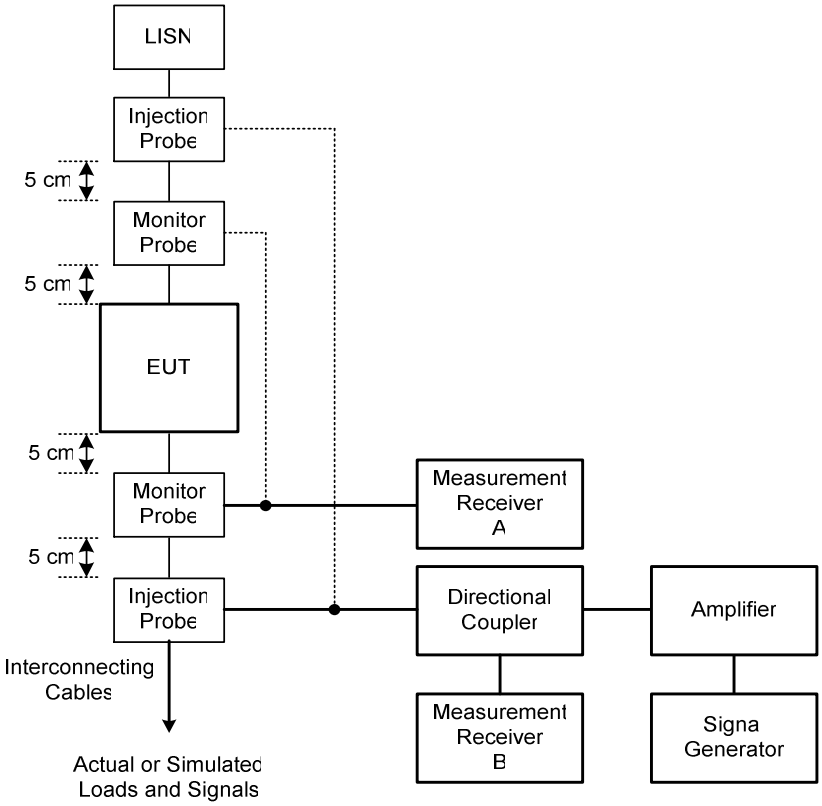

Figure NCS07-4 Bulk Cable Injection Evaluation

22 NCS08 CONDUCTED SUSCEPTIBILITY, BULK CURRENT INJECTION IMPULSE EXCITATION

22.1 NCS08 Applicability

This requirement is applicable to all aircraft, space, and ground systems interconnecting cables, including power cables. The requirement is also applicable for surface ship and submarine subsystems and equipment when specified by the procuring activity. Reference should also be made **Clause 6.16.**

22.2 NCS08 Limit

The EUT shall not exhibit any malfunction, degradation of performance, or deviation from specified indications, beyond the tolerances indicated in the individual equipment or subsystem specification, when subjected to a pre-calibrated signal having rise and fall times, pulse width, and amplitude as specified in **Figure NCS08-1** at a 30 Hz rate for one minute.

22.3 NCS08 Test Procedure

22.3.1 Purpose

This test procedure is used to verify the ability of the EUT to withstand impulse signals coupled onto EUT associated cabling.

22.3.2 Test Equipment

The test equipment shall be as follows:

a. Pulse generator, 50 Ω, charged line (coaxial)

b. Current injection probe

c. Drive cable, 50 Ω 2 metres, 0.5 dB or less insertion loss at 500 MHz

d. Current Probe

e. Calibration fixture: coaxial transmission line with 50 Ω characteristic impedance, coaxial connections on both ends, and space for an injection probe around the centre conductor.

f. Oscilloscope, 50 Ω input impedance

g. Attenuators, 50 Ω

h. Coaxial loads, 50 Ω

i. 50 µH LISNs

22.3.3 Setup

The test setup shall be as follows:

a. Maintain a basic test setup for the EUT as shown and described in **Figures 501-3** through **501-6** and **Clause 4.3.8**.

b. Calibration. Configure the test equipment in accordance with **Figure NCS08-3** for calibrating the injection probe.

(1) Place the injection probe around the centre conductor of the calibration fixture.

(2) Terminate one end of the calibration fixture with a coaxial load and terminate the other end with an attenuator connected to an oscilloscope with 50 Ω input impedance

c. EUT testing. Configure the test equipment as shown in **Figure NCS08-4** for testing.

(1) Place the injection probe around a cable bundle interfacing with an EUT connector.

(2) To minimize errors, maintain the same signal circuit that was used for calibration between the attenuator at the calibration fixture (oscilloscope, coaxial cables, bulkhead connectors, additional attenuators, etc.) and connect the circuit to the monitor probe. Additional attenuation may be used, if necessary.

(3) Locate the monitor probe 5 cm from the connector. If the overall length of the connector and backshell exceeds 5 cm, position the monitor probe as close to the connector back shell as possible.

(4) Position the injection probe 5 cm from the monitor probe.

22.3.4 Procedures

The test procedures shall be as follows:

a. Turn on the measurement equipment and allow sufficient time for stabilization.

b. Calibration. Perform the following procedures using the calibration setup.

(1) Adjust the pulse generator source for the risetime, pulse width, and pulse repetition rate requirements specified in the requirement. Verify the waveform generated connecting the pulse generator source to an oscilloscope with 50 Ω input impedance.

(2) Increase the signal applied to the calibration fixture until the oscilloscope indicates that the current level specified in the requirement is following in the centre conductor of the calibration fixture.

(3) Verify that the rise time, fall time, and pulse width portions of the waveform have the correct durations and that the correct repetition rate is present. The precise pulse shape will not be reproduced due to the inductive coupling mechanism (see **Figure 501-25**). Using a longer recording time, verify no additional signal appears after the main pulse (as damping waves, rebounds, etc) as shown in **Figure NCS08-02**. It may be necessary to connect a 50 Ω attenuator at the input of the injection probe to improve the impedance matching at the pulse generator output. In this case, maintain the attenuator used in the injection probe calibration during the EUT testing.

(4) Record the pulse generator amplitude setting.

c. EUT Testing.

(1) Turn on the EUT and allow sufficient time for stabilization

(2) Susceptibility evaluation

a. Adjust the pulse generator, as a minimum, for the amplitude determined in 3.4(b)

b. Apply the test signal at the pulse repetition rate and for the duration specified in the requirement.

c. Monitor the EUT for degradation of performance during testing.

d. Whenever susceptibility is noted, determine the threshold level in accordance with **Clause 4.3.10.4.3** and verify that it is above the limit.

e. Record the peak current in the cable as indicated on the oscilloscope.

f. Repeat 22.3.4c(2)(a) through to 22.3.4c(2)(e) on each cable bundle interfacing with each electrical connector on the EUT. For power cable, perform 22.3.4c(2)(a) through to 22.3.4c(2)(e) on complete power cables (high sides and returns) and on the power cables with the power returns and chassis grounds (green wires) excluded from the cable bundle. For connectors which include both interconnecting leads and power, perform 22.3.4c(2)(a) through to 22.3.4c(2)(e) on the entire bundle, on the power leads (including returns and grounds) grouped separately, and on the power leads grouped with the returns and grounds removed.

22.3.5 Data Presentation

Data presentation shall be as follows:

a. Provide tables showing statements of compliance with the requirement for the susceptibility evaluation of **Clause 22.3.4c(2)** and the induced current level for each interface connector.

b. Provide any susceptibility thresholds that were determined.

c. Provide oscilloscope photographs on injected waveforms with test data.

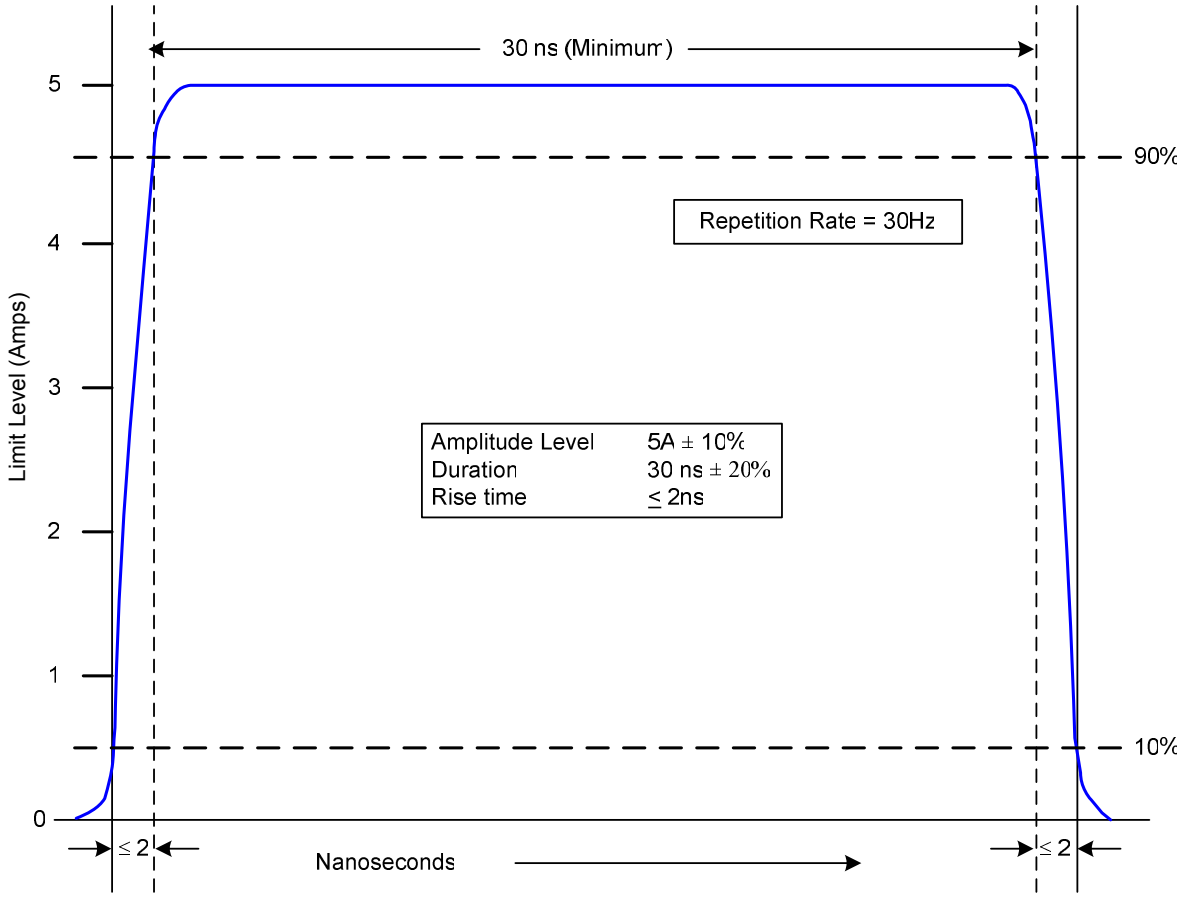

Figure NCS08-1 NCS08 Signal Characteristics for all Applications

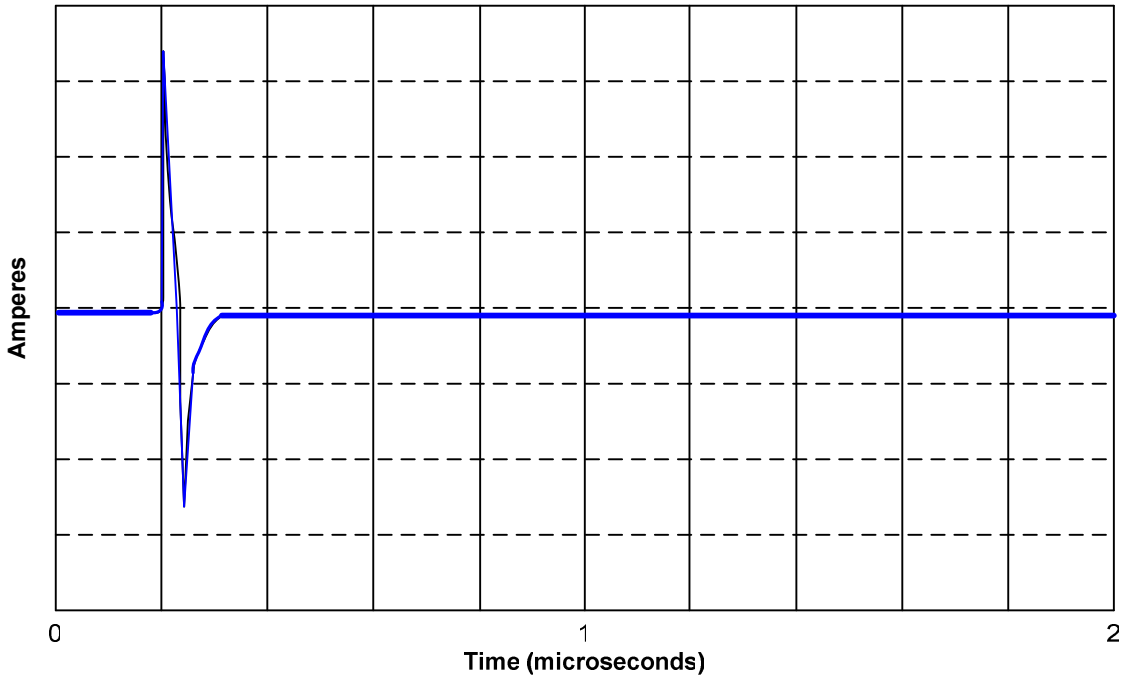

Figure NCS08-2
Typical NCS08 Calibration Fixture Waveform with a Longer Recording Time

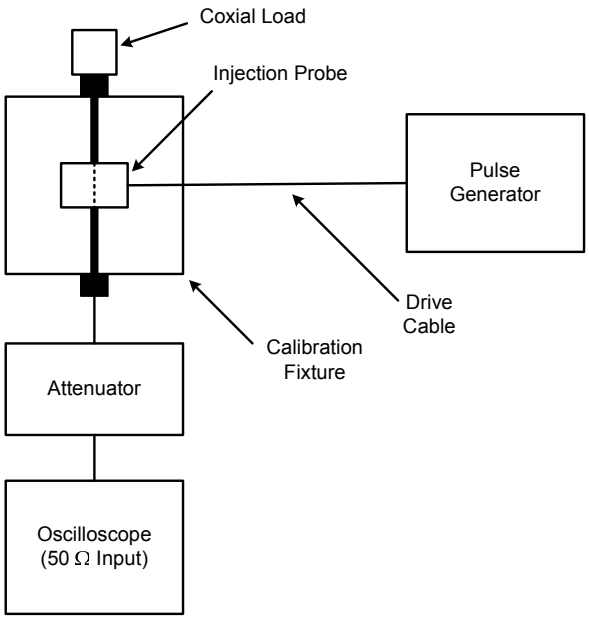

Figure NCS08-3 **Calibration Set-Up**

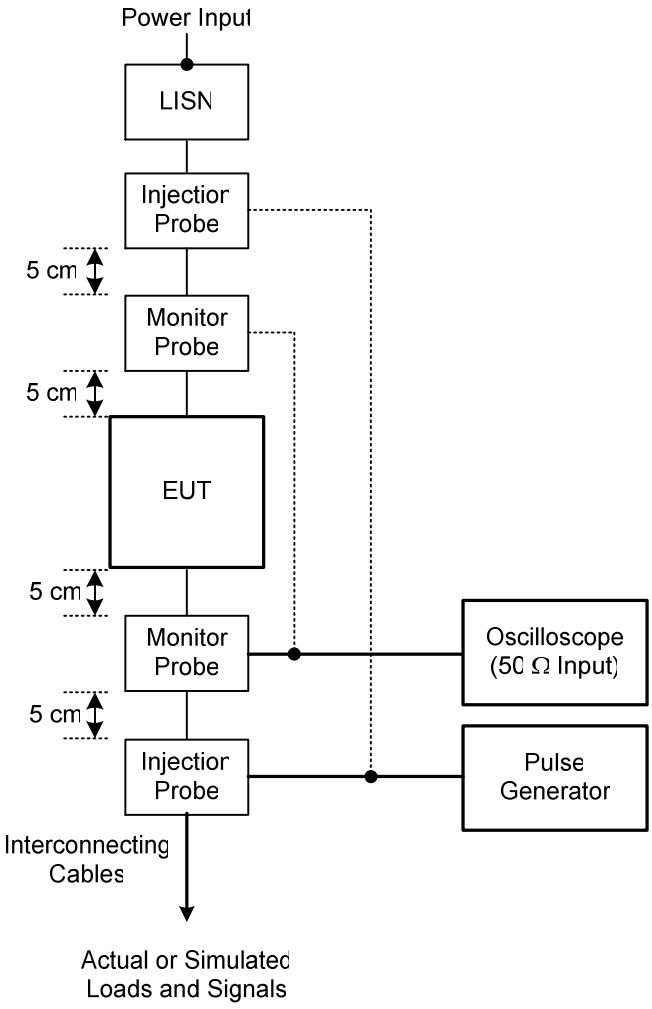

Figure NCS08-4 **Bulk Current Injection**

23 NCS09 CONDUCTED SUSCEPTIBILITY, DAMPED SINUSOIDAL TRANSIENTS, CABLES and POWER LEADS, 10 kHz to 100MHz

23.1 NCS09 Applicability

This requirement is applicable to all interconnecting cables, including power cables, and individual high side power leads. Power returns and neutrals need not be tested individually. For submarine application, this requirement is applicable only to cables and leads that exit the pressure hull. Reference should also be made to **Clause 6.17**.

23.2 NCS09 Limit

The EUT shall not exhibit any malfunction, degradation of performance, or deviation from specified indications, beyond the tolerances indicated in the individual equipment or subsystem specification, when subjected to a signal having the waveform shown in **Figure NCS09-1** and having a maximum current as specified in **Figure NCS09-2**. The limit is applicable across the entire specified frequency range. As a minimum, compliance shall be demonstrated at the following frequencies: 0.01, 0.1, 1, 10, 30, and 100 MHz. If there are other frequencies known to be critical to the equipment installation, such as platform resonances, compliance shall also be demonstrated at those frequencies. The test signal repetition rate shall be no greater than one pulse per second and no less than one pulse every two seconds. The pulses shall be applied for a period of five minutes.

23.3 NCS09 Test Procedures

23.3.1 Purpose

This test procedure is used to verify the ability of the EUT to withstand damped sinusoidal transients coupled onto EUT associated cables and power leads.

23.3.2 Test Equipment

The test equipment shall be as follows:

a. Damped sinusoid transient generator, ≤ 100 ohm output impedance
b. Current injection probe
c. Oscilloscope, 50 ohm input impedance
d. Calibration fixture: Coaxial transmission line with 50 ohm characteristic impedance, coaxial connections on both ends, and space for an injection probe around the centre conductor
e. Current probes
f. Waveform recording device
g. Attenuators, 50 ohm
h. Measurement receivers
i. Coaxial loads, 50 ohm
j. Signal generators
k. Directional couplers
l. 50 µH LISNs

23.3.3 Setup

The test setup shall be as follows:

a. Maintain a basic test setup for the EUT as shown and described in **Figures 501-2** through to **501-6** and **Clause 4.3.8**.

b. Calibration. Configure the test equipment in accordance with **Figure NCS09-3** for verification of the waveform.

c. EUT Testing:

(1) Configure the test equipment as shown in **Figure NCS09-4**.

(2) To minimize errors, maintain the same signal circuit that was used for calibration between the attenuator at the calibration fixture (oscilloscope, coaxial cables, bulkhead connectors, additional attenuators, etc.) and connect the circuit to the monitor probe. Additional attenuation may be used, if necessary.

(3) Place the injection and monitor probes around a cable bundle interfacing an EUT connector.

(4) Locate the monitor probe 5 cm from the connector. If the overall length of the connector and backshell exceeds 5 cm, position the monitor probe as close to the connector's backshell as possible.

(5) Position the injection probe 5 cm from the monitor probe.

23.3.4 Procedures

The test procedures shall be as follows:

a. Turn on the measurement equipment and allow sufficient time for stabilization.

b. Calibration. Perform the following procedures using the calibration setup for waveform verification.

(1) Set the frequency of the damped sine generator at 10 kHz.

(2) Adjust the amplitude of the signal from the damped sine generator to the level specified in the requirement.

(3) Record the damped sine generator settings.

(4) Verify that the waveform complies with the requirements.

(5) Repeat 23.3.4b(2) through 23.3.4b(4) for each frequency specified in the requirement and those identified in 23.3.4c(2).

c. EUT testing

Perform the following procedures, using the EUT test setup on each cable bundle interfacing with each connector on the EUT including complete power cables. Also perform tests on each individual high side power lead (individual power returns and neutrals are not required to be tested).

(1) Turn on the EUT and measurement equipment to allow sufficient time for stabilization.

(2) Set the damped sine generator to a test frequency.

(3) Apply the test signals to each cable or power lead of the EUT sequentially. Reduce the signal, if necessary, to produce the required current. For shielded cables or low impedance circuits, it may be preferable to increase the signal gradually to limit the current. Record the peak current obtained.

(4) Monitor the EUT for degradation of performance.

(5) If susceptibility is noted, determine the threshold level in accordance with **Clause 4.3.10.4.3** and verify that it is above the specified requirements.

(6) Repeat 23.3.4c(2) through 23.3.4c(5) for each test frequency as specified in the requirement.

23.3.5 Data Presentation

Data presentation shall be as follows:

a. Provide a list of the frequencies and amplitudes at which the test was conducted for each cable and lead.

b. Provide data on any susceptibility thresholds and the associated frequencies that were determined for each connector and power lead.

c. Provide indications of compliance with the requirements for the susceptibility evaluation specified in **Clause 23.3.4c** for each interface connector.

d. Provide oscilloscope photographs of injected waveforms with test data.

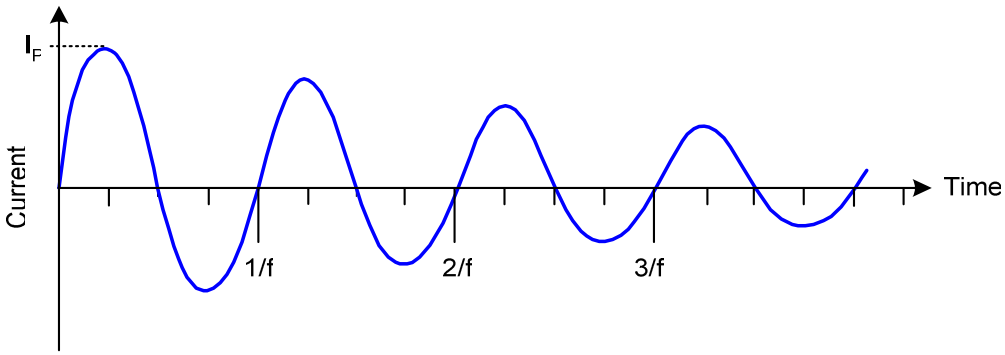

Notes

1. Normalized Waveform: $e^{-(\pi ft)/Q} \sin(2\pi ft)$
   Where:
   f = Frequency (Hz)
   t = Time (sec)
   Q = Damping Factor 15 $\pm$5

2. Damping Factor Q shall be determined as follows:

$$Q = \frac{\pi(N-1)}{\ln(I_p / I_N)}$$

   Where:
   Q = Damping Factor
   N = Cycle Number (i.e. N = 2, 3, 4, 5……)
   I_p = Peak Current at 1st Cycle
   I_N = Peak Current at closest to 50% decay
   In = Natural Log

3. I_p as specified in Figure NCS09-2

Figure NCS09-1 Typical NCS09 Damped Sinusoidal Waveform

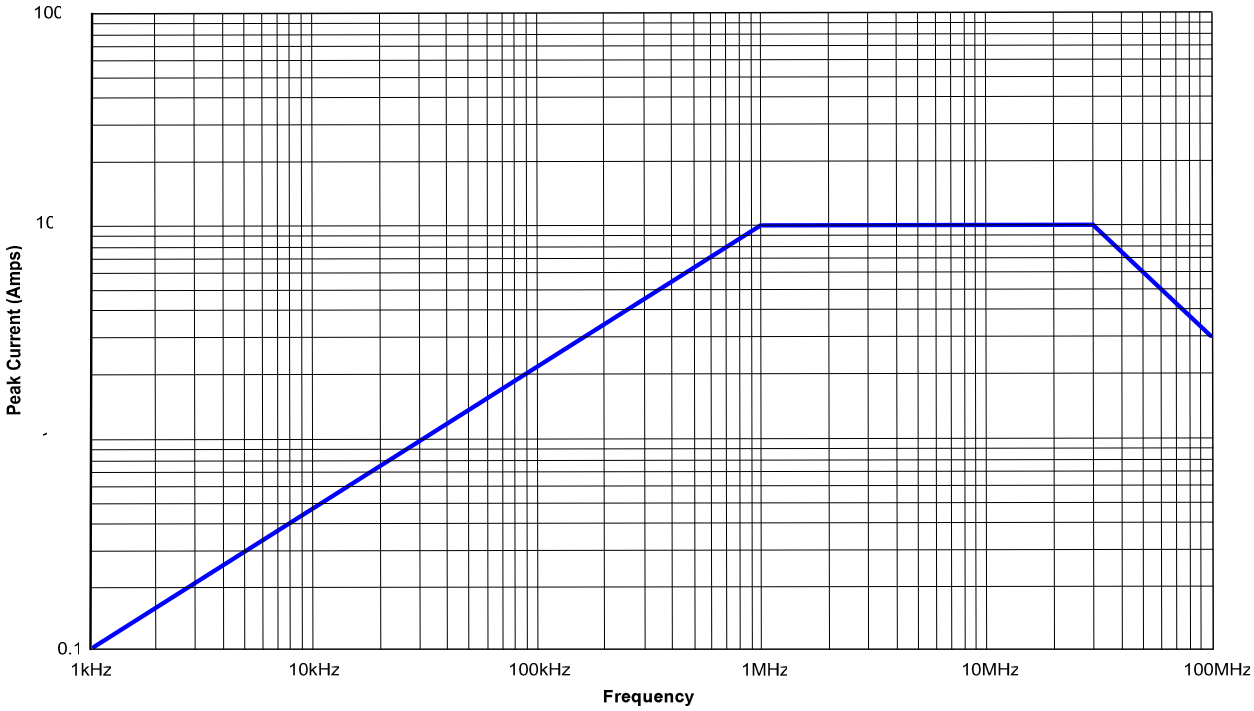

Figure NCS09-2 Limit for all Applications

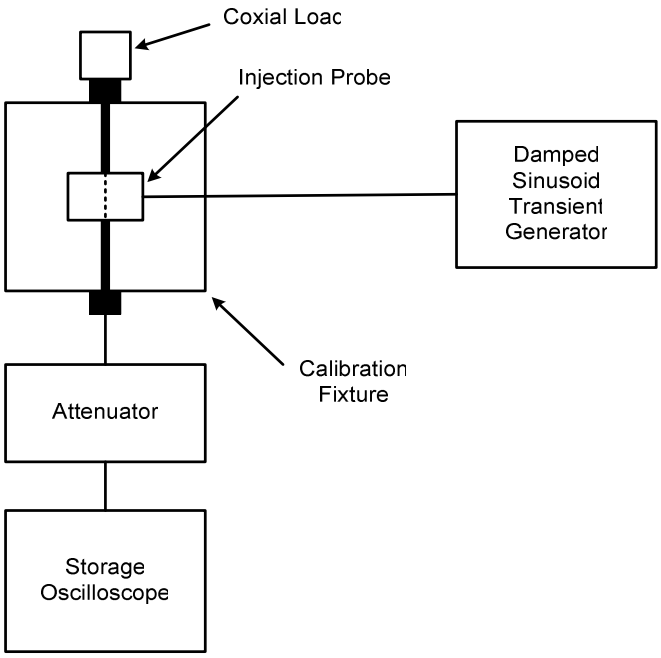

Figure NCS09-3 Typical Test Setup for Calibration of Test Waveform

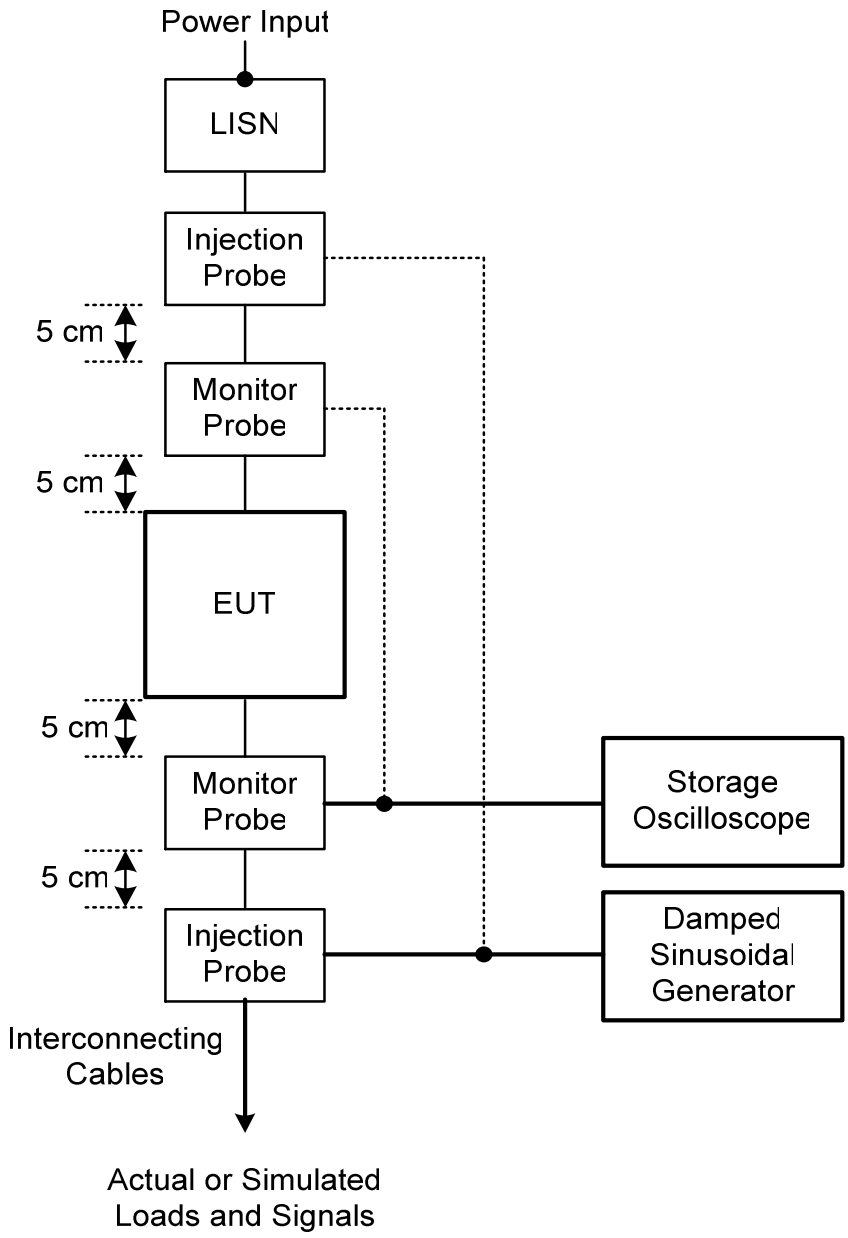

Figure NCS09-4Typical Setup for Bulk Cable Injection of Damped Sinusoidal Transients

24 NCS10 CONDUCTED SUSCEPTIBILITY, IMPORTED LIGHTNING TRANSIENTS (AIRCRAFT / WEAPONS)

24.1 NCS10 Applicability

The test applies to all equipment fitted with electronic and active components, particularly non-linear items such as transistors or integrated circuits etc. for use in aircraft or any airforce procured land or ship based equipment, which may be considered flight safety critical for aircraft operation. Other types of equipment such as Motors, generators, relays, solenoids and transformers shall also be considered with regard to their function and vulnerability.

Because there is a close connection between the design requirements for protection against lightning Group Indirect Effects (GIE) and those covering EMC and Nuclear Electromagnetic Pulse (NEMP) considerations, the Lightning Protection Plan shall take account of EMC Requirements, and also of NEMP requirements if applicable. Lightning requirements shall be co-ordinated with these other requirements and any conflict of requirements in particular instances shall be noted in the Risk Assessment and proposals included for resolving the conflict.

Interface load boxes and exercising equipment shall, in respect of grounding and bonding, be representative of the installation including the mounting trays.

The test levels applied to equipment are derived from the locations and positions of the installed equipment. The maximum amplitudes for the test waveforms are chosen according to equipment categories A-D as shown in **Table NCS10-1**.

If any two units of an EUT are mounted less than 0.5 metres apart and their ground bonding points are to the same part of the aircraft structure, then this test is not applicable to the two units separately. In this case the two units will be regarded as a single EUT with their ground bonding leads joined together and tested with respect to other units comprising the EUT.

If any two units of an EUT are mounted less than 0.5 metres apart and have any of their ground bonding points connected to different parts of the aircraft structure, then the units shall be tested separately.

Some of the more complex EUTs may require clarification of the test method and approval of test plans and procedures by the respective Project Office.

The test object must contain all the pieces of equipment included in the system, all interconnecting wire bundles and all sensors that input critical or essential data into the system. Occasionally a piece of equipment may be omitted if its function can be represented by a simulated input, dummy load or be interfaced with a diagnostic equipment as long as such a substitution does not affect system susceptibility to a lightning related upset. Any substitution of system equipment, as described above, should be documented in the test plan and approved by the certification authorities prior to conducting the test. Depending upon the criticality of the sensor, additional testing of the sensor may be required. Reference should also be made to **Clause 6.18**.

24.2 NCS10 Limits

The limits are shown in **Table NCS10-1**.

Category	Peak waveform amplitude, current and voltage					
	Short		Intermediate		Long	
	(V)	(A)	(V)	(A)	(V)	(A)
A	125	250	125	250	N/A	N/A
B	300	600	300	600	2000	1000
C	750	1500	750	1500	2000	3000
D	1600	3200	1600	3200	2000	10000

Table NCS10-1 Peak Waveform Amplitude Limits

Note: Some branches of the EUT harness will be very low impedance (shielded cables) and some high impedance (unshielded cables). The low impedance cables will have high current flow (up to 10,000 A) and the high impedance cables will have high voltages induced at the maximum generator outputs. It is important to note that the applicable limit is met when either the peak current or voltage reaches the required level.

When testing equipment using the long waveform if the voltage limit is reached before the current limit, testing should be stopped and then recommenced using the Intermediate waveform at CAT D levels.

24.3 NCS10 Test Procedure

24.3.1 Purpose

A direct lightning strike to an aircraft will result in the coupling of electrical transients to equipment wiring, including the EUT ground bonding straps. The purpose of this test is to ensure that these transients will not cause damage, malfunction or unacceptable performance degradation of the equipment. These performance criteria will be defined in the EMITP.

Note: Test NCE01 or NCE05 must have been performed prior to this test being conducted and repeated once testing has been completed. Refer to **Clause 4.3.10.4.4**.

24.3.2 Test Equipment

The test equipment shall be as follows:

a. Pulse generators: These generators provide a single uni-directional current pulse, which is injected into an equipment ground bonding lead to simulate the current induced by a direct lightning strike on an aircraft. Three different pulse waveforms are specified as 'short', 'intermediate', and 'long' in terms of pulse rise-time and duration; they are illustrated in **Figures NCS10-1**, **NCS10-2** and **NCS10-3**. The specific performance characteristics of the generator are as follows:

(1) Pulse characteristics **Table NCS10-2** specifies the output waveform required of each type of pulse generator and shows the maximum peak short circuit current and maximum peak open circuit voltage to be provided.

(2) Amplitude control Equipment intended for operation in an exposed electromagnetic environment require testing with the high current and voltage levels shown in **Table NCS10-2**. For equipment to be operated in a protected electromagnetic environment, the current and voltage test levels are reduced by a factor of about 13

for both the short and intermediate pulses. The current for the long pulse is reduced by a factor of 10 but no reduction is made in the open circuit voltage. Control of amplitude to meet the different test levels is essential while preserving the required waveform.

(3) Generator design. A separate generator is likely to be required for each of the three waveforms.

The generator output requirements as specified in **Table NCS10-2** shall be verified. The source impedance shall be verified at the output terminals and all other parameters verified using the output leads which will be used subsequently to connect the pulse generator to the EUT. Verification of both positive and negative polarity output waveforms are required. The output leads should be of solid copper, preferably not exceeding 75 mm in length with a cross-section of 25 mm x 2 mm.

Pulse Duration	Short	Intermediate	Long
Rise time to pk (µs)	0.1 (see Note 1)	6.4	50
Fall time to zero from start (µs)	6.4 (see Note 2)	-	-
Fall time to 50 % pk from start (µs)		70	500
Max short circuit current (kA)	0.32	1.0	10
Max open circuit voltage (kV)	1.6	5.0	2.0
Generator Source Impedance (Ω)	5.0	5.0	0.2

Table NCS10-2 Pulse Waveform and Output Characteristics

Note 1: This is the maximum time allowed to reach peak amplitude. All other times have a tolerance of ± 20%.

Note 2: After the zero crossing the pulse amplitude is permitted to undershoot but by no more than 20% of peak amplitude.

b. Oscilloscope

c. Current Monitor

d. Capacitor, 30,000 µF

e. 5 µH LISNs

24.3.3 Setup

24.3.3.1 The test setup shall be as follows:

a. A typical test layout is shown in **Figure NCS10-4**. It should be functioning and configured in a manner representative of the actual aircraft installation. Care must be taken to ensure that the LISNs used are rated to withstand the currents and voltages used in this test.

b. The EUT must be isolated from the ground plane using 50 mm thick insulating material capable of withstanding the maximum test voltage.

c. If special-to-type test, exercising equipment or other units, which do not form part of the

operational EUT configuration are present, it must be confirmed that the grounding and bonding philosophy is fully representative of the aircraft installation. This is to ensure that the injected currents and voltages will be distributed around the EUT in a representative manner. It must also be ensured that equipment not part of the EUT are not affected by the testing and cannot give rise to erroneous fault conditions.

d. Interconnecting layout cable bundles must be laid out in such a manner as to minimise any non-representative inductive interactions, i.e. only bunch together those cable bundles that would be run together in the aircraft installation.

e. Identify the main grounding point for each unit of the EUT.

f. Disconnect all local EUT grounding straps from the test facility ground plane, i.e. those grounding straps, safety grounds, signal grounds etc. which are intended to be grounded to the same part of the aircraft structure within 0.5 metres of the EUT. Connect the disconnected ends together to form an isolated grounding point for the EUT.

g. Connect the pulse generator between the facility ground plane and the isolated EUT grounding point using the same test leads that were used for the calibration procedure.

24.3.3.2 System Operating Mode(s)

System operating modes should be considered prior to test. It is often required to test in multiple modes (i.e. for a Fully Automated Digital Electronic Control [FADEC] approach, take-off, cruise) and it must be established that all critical aspects of the system are adequately tested. The modes selected for testing and rationale should be defined clearly in the EMITP.

24.3.3.3 System Configuration

Control of wire configuration, wire length, system layout and system grounding should be in accordance with applicable installation control drawings to the extent they are practical.

24.3.3.4 External Ground Terminal

When external terminals are available for ground connection on the EUT, the terminal shall be connected to the ground plane to ensure safe operating conditions during the test, unless otherwise specified in the EMITP. The length of the ground connection defined in the installation instructions shall be used. If a length is not defined, approximately 30 cm of a representative wire or ground strap can be used.

24.3.3.5 Interconnecting Cable Bundles

a. All EUT interconnecting wiring (e.g., shielded wires, twisted wires, etc.) cable bundles and RF transmission lines shall be in accordance with the applicable installation and interface control drawings or diagrams. Physical and electrical characteristics of wire bundle configurations, must match the actual installation as closely as possible. Actual production configuration wire bundles should be used where practical.

b. Cables shall be bundled in a manner similar to that of the intended aircraft installation and supported approximately 50 mm above the ground plane. For complex cable bundle configuration, all cable bundles and interconnected loads should be kept separated from each other as much as is practical to minimise coupling effects between cables.

c. Unless otherwise specified the cable bundle shall be at least 3.3 metres. When the length of an interconnecting cable bundle is greater than the test bench, the cable bundle should be arranged with the excess length zig-zagged at the back of the test bench approximately 50mm above the ground plane.

d. Some special installations may require very long cable bundle lengths which cannot be accommodated on the test bench: therefore the recommended maximum length of the interconnecting cable bundles for these tests shall not exceed 15 metres. The exception

to this limitation is where cable bundle lengths are matched or specified to a particular length for phase match or similar reasons.

24.3.3.6 Power Leads

a. For cable bundle tests, power and return leads normally bundles with the control / signal leads shall remain in the cable bundle and only be separated from the bundle just prior to the cable bundle exiting the test area. These leads shall then be connected to the LISNs.

b. When the actual aircraft / weapon cable bundle configuration is unknown or when power and / or return leads are normally routed separately from the control / signal leads, the power and return leads should be broken out of the cable bundle near the connector of the EUT and run separately to the LISNs. Under these conditions, the length of the leads to the LISNs shall not exceed 1 metre unless otherwise specified in the applicable equipment specification.

c. When the return lead is a local ground (less than 1 metre length), this lead may be grounded directly to the test bench, in accordance with the applicable installation and interface control drawings or diagrams.

24.3.3.7 Interface Loads and Support Equipment

a. Cable bundle tests ideally should be performed on fully functioning equipment. EUTs should be suitably loaded actual interface equipment.

b. When the interface equipment must be simulated, the simulated electrical, electronic and / or electromechanical characteristics of the loads should be representative of the aircraft /weapon installation. To avoid altering the voltage and current distributions in the cable bundles, the electrical / electronic loads should simulate the actual load line-to-line and line-to-ground impeadances (including stray capacitance) as far as is practical.

c. Care should be taken that any test configuration, simulated load or monitoring equipment does not alter the susceptibility or immunity of the EUT. Support equipment may require protection from the effects of the applied transients in order to avoid upset or damage.

24.3.3.8 Dummy Antenna or Loads

For the purpose of this test, antenna cables may be terminated in a load equal to the cable characteristic impedance, or a dummy antenna. The dummy antenna, if used shall be shielded and be designed to have electrical characteristics closely simulating the in-service antenna. It shall also contain electrical components normally used in the antenna, such as filters, crystal diodes, synchros and motors.

24.3.4 Procedures

The following safety considerations should be observed:

a. The pulse generators used in these tests produce lethal voltages and suitable safety precautions must be taken. All personnel must be made aware of the potential hazards and instructed to follow the approved safety procedures of the Test House responsible for the conduct of the tests.

b. When testing with the Long Waveform, in particular, it is advisable for personnel in the vicinity of the EUT to wear eye protection. Some components have been known to explode and project debris over distances of several metres.

c. Some types of pulse generators can produce a high intensity burst of noise when they are fired. All personnel should be made aware of this and advised to wear ear protection.

24.3.4.1 Generator Performance Verification

a. Connect the transient generator to the primary inputs of the injection transformer, see **Figure NCS10-5**.

b. For each generator, record the voltage waveform with the calibration loop open and the current waveform with the calibration loop shorted. For the Single Stroke test verify the relevant waveshape parameters identified in **Figure NCS10-1** and verify that the maximum designated test level (A or V) of **Table NCS10-1** can be achieved.

24.3.4.2 Test Procedures

a. Switch the EUT on and ensure that it is operating in accordance with the EMITP.

b. Operate the pulse generator and increase the output from zero up to the test limit in steps not exceeding 10% of the required test limit. Apply at least 3 transients at each step, with a delay of at least 8s between each.

c. If a malfunction occurs, record the applied peak current and voltage levels.

d. If no malfunction occurs, increase the generator output until the peak current or peak voltage test limits is reached and then apply 10 transients, separated by at least 8 seconds, over a period of not more than 2 minutes. Record a typical set of the current and voltage waveforms that appear between the equipment case and earth

e. Repeat the above procedure for both positive and negative polarity pulses.

24.3.4.3 Application of Test Waveforms

The Short waveform shall be applied to all EUTs or Weapons. If it is known that a, particular equipment is intended to be installed in an aircraft with a well-bonded, low impedance, largely metallic structure then the Intermediate pulse waveform shall be applied in addition to the Short pulse.

For equipment that is intended to be installed in largely Carbon Fibre Composite (CFC) airframes or equipment whose interconnecting wiring is run in areas covered by CFC panels then the Long pulse waveform shall be applied in place of the Intermediate waveform.

If it is not known where the equipment is to be installed then guidance should be sought from the relevant project office.

The four test categories are:

a **CAT A:** Equipment and cabling installed in a protected electromagnetic environment such as a completely enclosed avionics bay in a metallic aircraft.

b **CAT B:** Equipment and cabling installed in a partially exposed electromagnetic environment such as the cockpit of an aircraft with a largely metallic structure.

c **CAT C:** Equipment and cabling bonded to the same part of the aircraft structure and installed in an exposed electromagnetic environment where large portions of the airframe are constructed from poorly conducting or CFC materials.

d **CAT D:** Equipment and cabling bonded to different parts of the aircraft structure and installed in an exposed electromagnetic environment where large portions of the airframe are constructed from poorly conducting or CFC materials.

Where equipment and cables can be defined in more than one of the above categories then the test levels associated with the more severe environment shall be applied.

24.3.5 Data Presentation

Data presentation shall be as follows:

a. Any malfunction, failure or damage of the equipment shall be investigated and recorded in the test report. If necessary, photographs of the damage shall be included.

b. Where any oscillograms of the induced transient waveform are to be included in the test report, each oscillogram shall contain, as a minimum, the following information:

c Details of cable under test

d EUT mode of operation

e X axis – volts per division

f Y axis – time per division

g Transient Polarity

h Respective amplitudes achieved

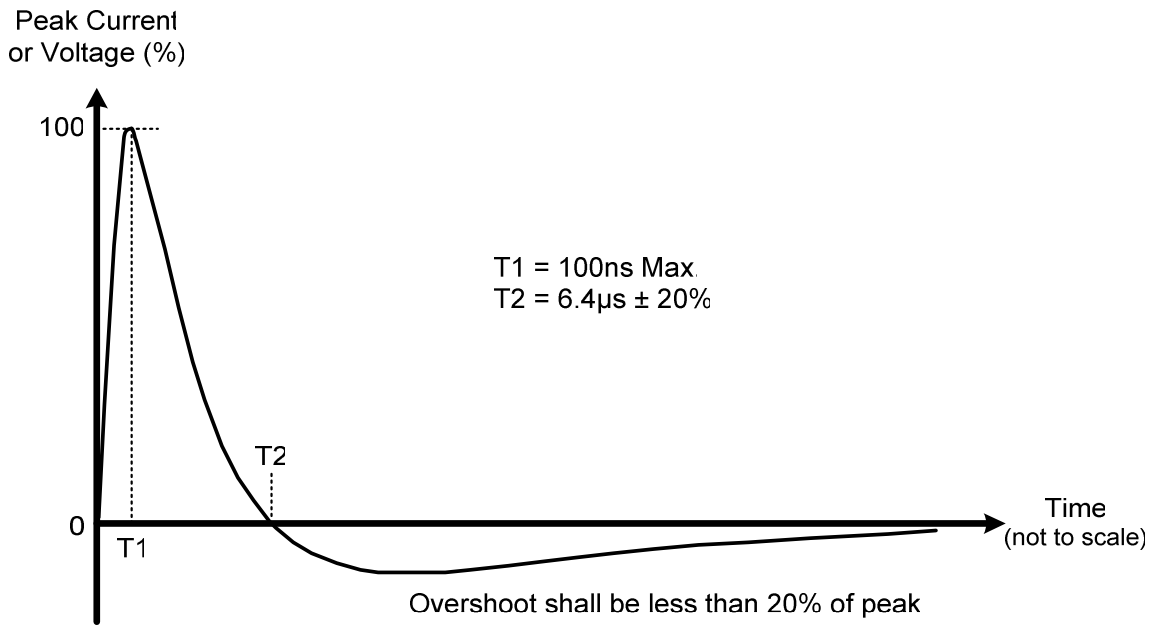

Figure NCS10-1 Short Waveform

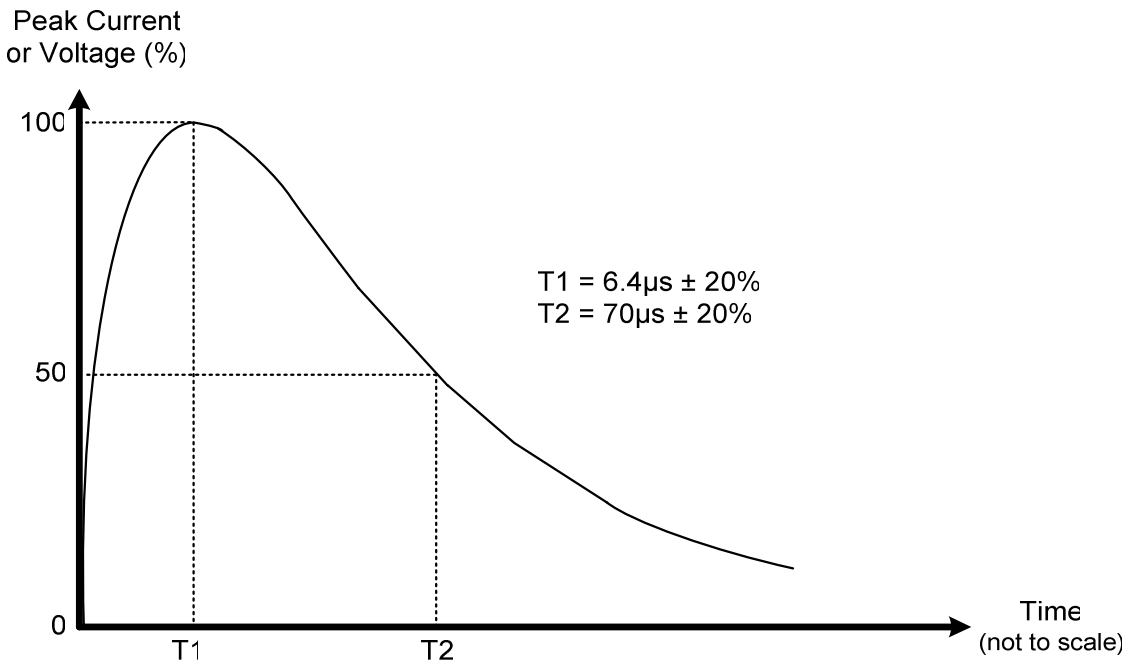

Figure NCS10-2 Intermediate Waveform

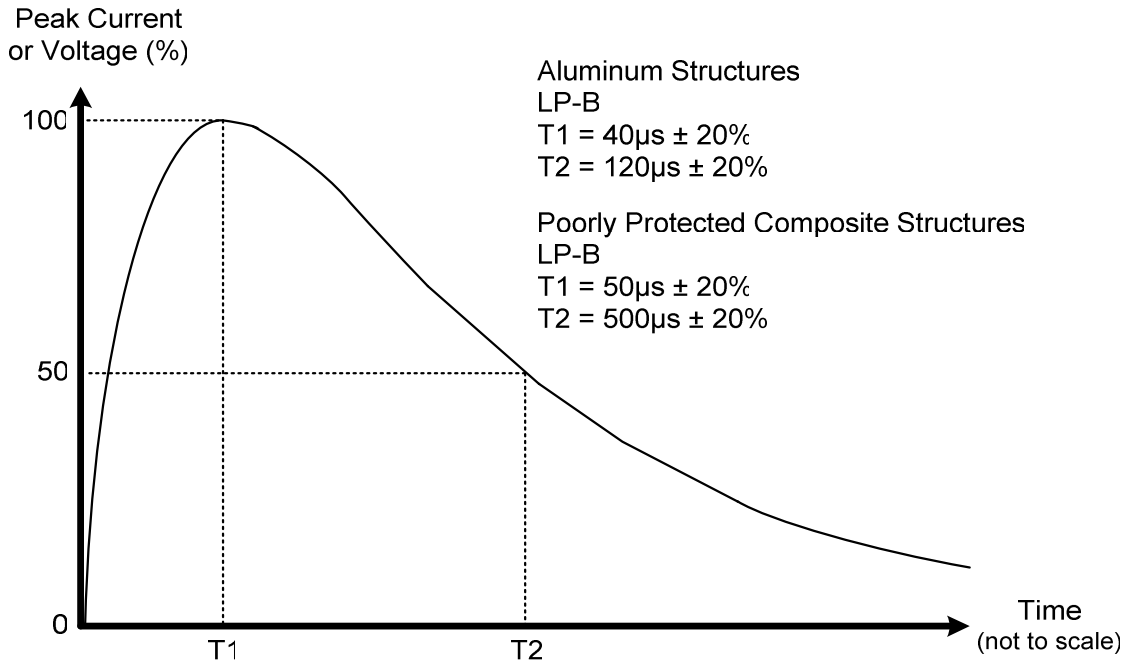

FIGURE NCS10-3 Long Waveform

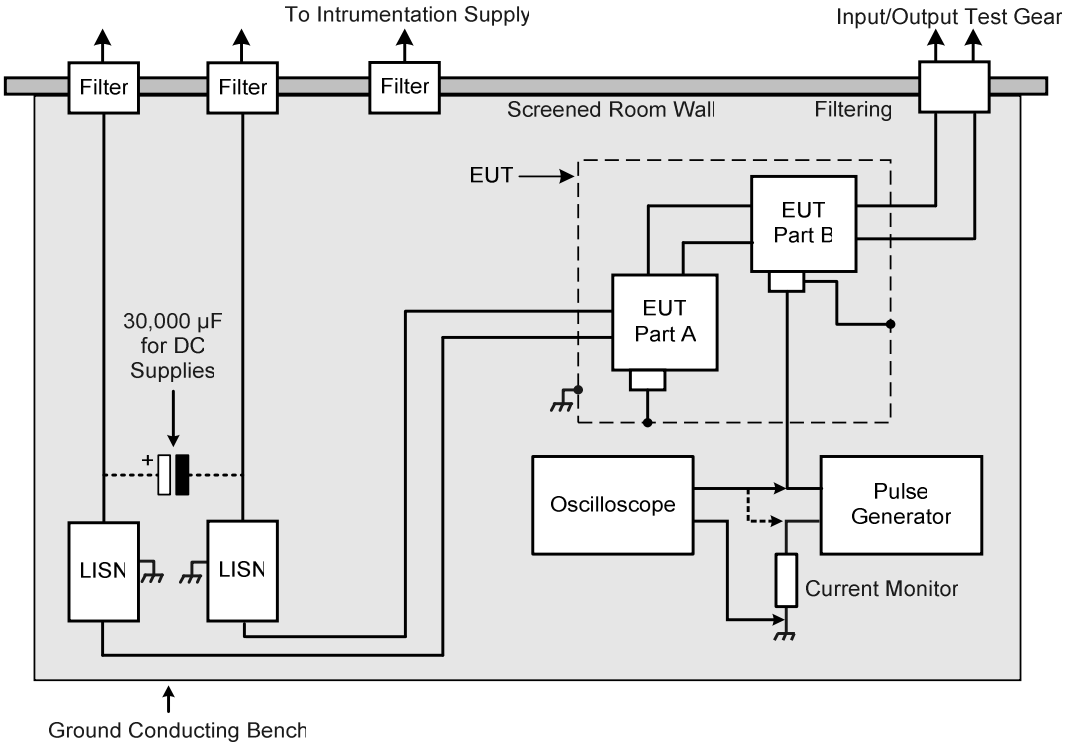

Figure NCS10-4 Typical Test Configuration

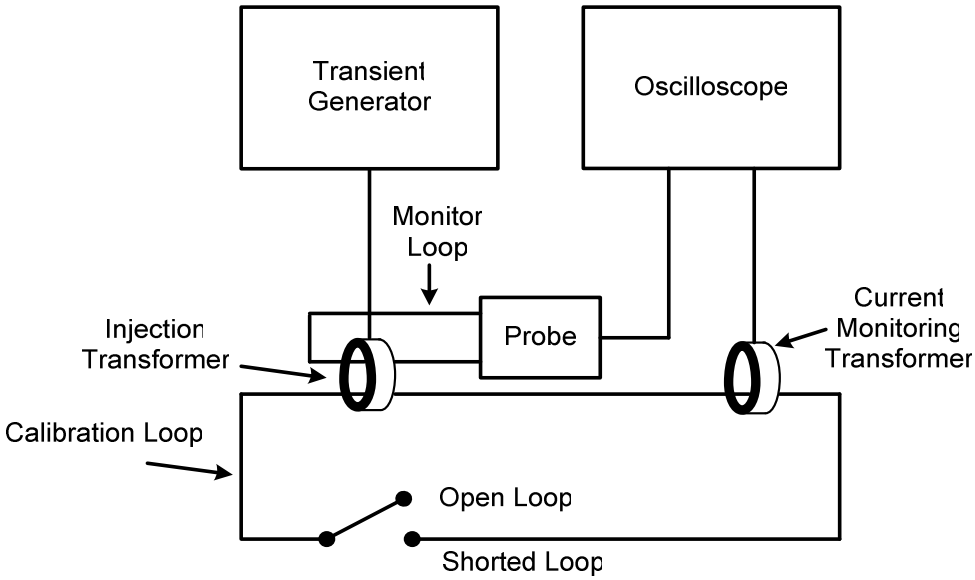

Figure NCS10-5 Typical Generator Performance Verification Setup

25 NCS11 CONDUCTED SUSCEPTIBILITY, IMPORTED LOW FREQUENCY, SUSCEPTIBILTY POWER LEADS (SEA SYSTEMS)

25.1 NCS11 Applicability

This test applies to all equipment in use in the Sea Systems environment connected to ship and submarine power supplies. Positive-going and negative-going, damped sinewave transients between 10 to 16 kHz, are to be applied to individual supply leads of a EUT, for both AC and DC incoming supplies. Battery operated equipment which may be connected to a platform supply, for example, during battery charging, shall also be subjected to this test. Reference should also be made to **Clause 6.19**.

25.2 NCS11 Limits

The EUT shall continue to function properly, during and after the application of the transients whose levels are specified in **Table NCS11-1**.

Note: When applying transients to the EUT the peak voltage recorded on the oscilloscope may be different from that seen during the generator check if the input impedance of the EUT and LISN in series is different from 10 Ω ± 5% at the frequency of the transient.

EUT Supply Voltage (V)	Peak Voltage Across 10 Ω Resistor (V)
440 V 60Hz 170 - 720 V DC	2500 ± 15%
115V 60/400Hz	750 ± 10%
24 V DC	600 ± 10%

Table NCS11-1 Level of Applied Transients

25.3 NCS11 Test Procedure

25.3.1 Purpose

The purpose of this test is to confirm that the EUT will withstand imported low frequency transients imposed upon its power supply leads. This test simulates the effect of voltage transients observed due to switching of machines and other loads on ship and submarine power supply systems.

25.3.2 Test Equipment

The test equipment shall be as follows:

a. Transient generator
b. Differential Oscilloscope Probe
c. Oscilloscope
d. Resistor, 10 Ω ±5%
e. 5 μH LISNs
f. Capacitor, 30,000 μF

25.3.3 Generator Characteristics

The generator is intended to simulate imported low frequency damped sinusoid transients, imposed on power leads. The generator shall incorporate an output transformer having a secondary winding to be connected in series with the power line under test. The generator shall be capable of providing three alternative fixed output voltages. The specific performance characteristics of the generator output, when the secondary winding is terminated with a 10 Ω ± 5% low inductance resistor, are shown in **Table NCS11-2** with typical waveforms given in **Figures NCS11-1** and **NCS11-2.**

Output voltage (Vpk) ± 10% (Note 1)	600	750	2500
Frequency (kHz) ± 10% (Note 2)	15.9	15.9	10.9
Relative amplitude of 3rd ½ cycle (Note 3)	0.6 – 0.8	0.6 – 0.8	0.2 – 0.3
Output impedance (Ω) ± 10% (Note 4)	0.15	0.4	2.5

Note 1: Specified as the amplitude of the first half cycle i.e. Vpk.

Note 2: Calculated from the combined duration of the first three half cycles.

Note 3: Calculated by dividing the peak voltage of the third cycle by Vpk.

Note 4: Specified as the value of resistance which, when connected across the secondary winding, reduces the winding voltage (amplitude of first half cycle) to half the open circuit voltage.

Table NCS11-2 Generator Performance Characteristics

25.3.4 Setup

The test setup shall be as follows:

a. A typical test layout is shown in **Figure NCS11-3**.

b. The equipment under test shall be installed in the test house in such a way as to accurately simulate the intended platform installation. The secondary of the injection transformer shall be wired into each lead under test at the LISN end.

c. Prior to the in-line connection of the transient generator secondary winding, the output of the generator, when terminated with a 10 Ω ± 5% low inductance resistor, shall be checked to be compliant with the test levels shown in **Table NCS11-1**.

25.3.5 Procedures

The test procedures shall be as follows:

a. Conducted emission test NCE01 must have been performed prior to performing this test.

Note: If this test has been performed as part of the trial then this is acceptable.

b. With the transient generator connected in series with the supply lead under test, the EUT is to be checked for correct function and operation prior to the application of the transients.

c. Each supply lead in turn shall then be subjected to twelve positive-going applications of the transient using the generator output settings appropriate to the EUT supply voltage as shown in **Table NCS11-2** followed by twelve negative-going transients. These transients shall be applied at a rate of one every 2 to 5 seconds.

d. The generator output waveform shall be monitored on the oscilloscope. The voltage induced into the cable under test and photographs of the induced transient waveform may be recorded for inclusion in the test report.

e. During each transient application, the EUT shall be monitored for degradation of performance, damage or malfunction as defined in the EMC test plan. When testing digital systems it may be necessary to apply a greater number of transients to ensure detection of any malfunction. In this case, the EMITP should include some guidance to ensure capture of a malfunction during test.

f. On completion of all transient applications, conducted emission test NCE01 shall be repeated to confirm that any power line filter have not been damaged. This resultant emission profile shall be assessed against the NCE01 result obtained prior to the transient application. This shall determine whether any damage to the EUT occurred during application of the transients, i.e. Filtering or other component damage. Should any significant changes in emission profile be evident then a FAIL result shall be recorded for this test even if the emission profile has been reduced due to the application of the transient.

Note: The conducted emission assessment is not intended to show compliance against the NCE01 limits but is used solely to compare the ‘before’ and ‘after’ emission profiles.

25.3.6 Data Presentation

Data presentation shall be as follows:

a. Any malfunction, failure or damage of the equipment shall be investigated and recorded in the test report.

b. Where any oscilloscope photographs of the induced transient waveform are to be included in the test report, each photograph shall contain, as a minimum, the following information:

Details of cable under test

EUT mode of operation

X axis – volts per division

Y axis – time per division

Transient polarity

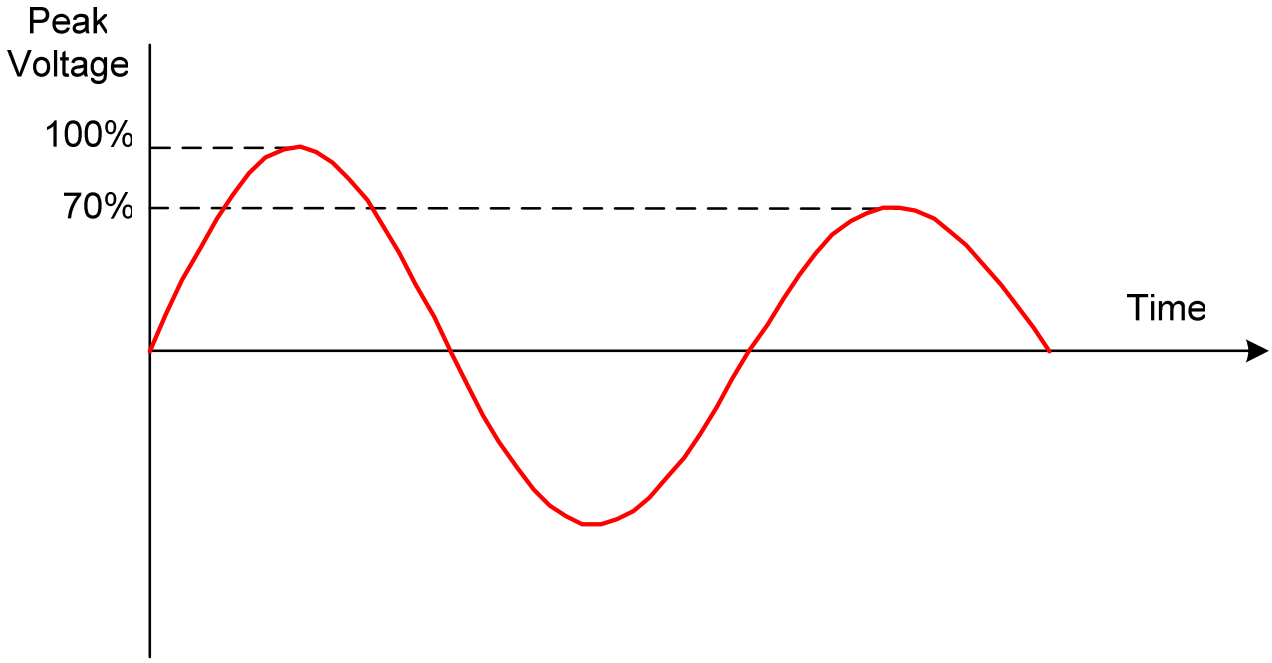

Figure NCS11-1 Typical Transient Waveform (600V and 750V)

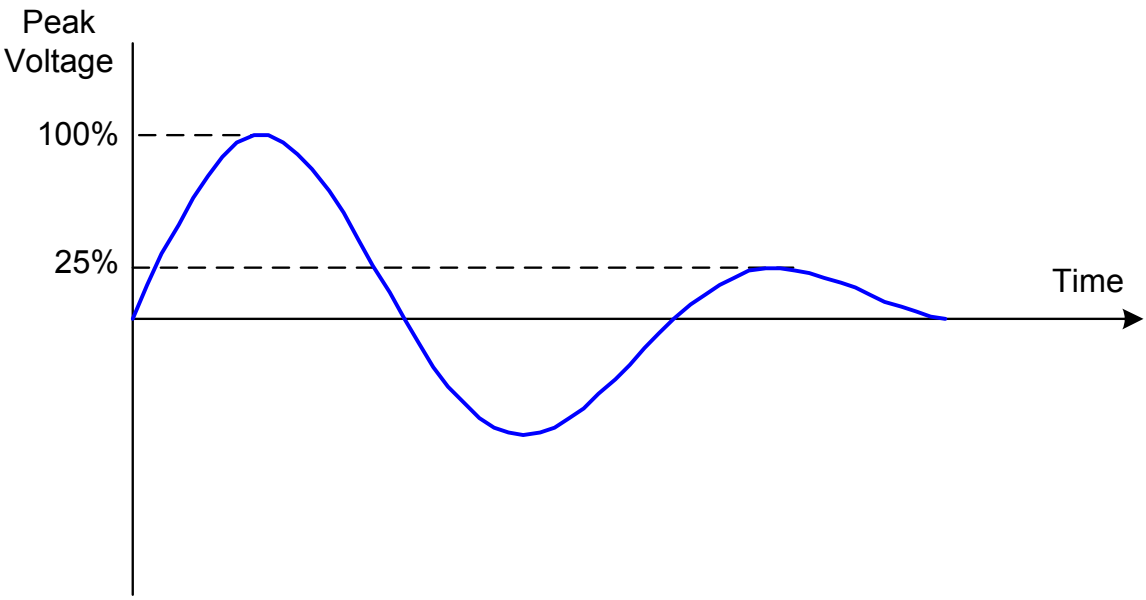

Figure NCS11-2 Typical Transient Waveform (2500V)

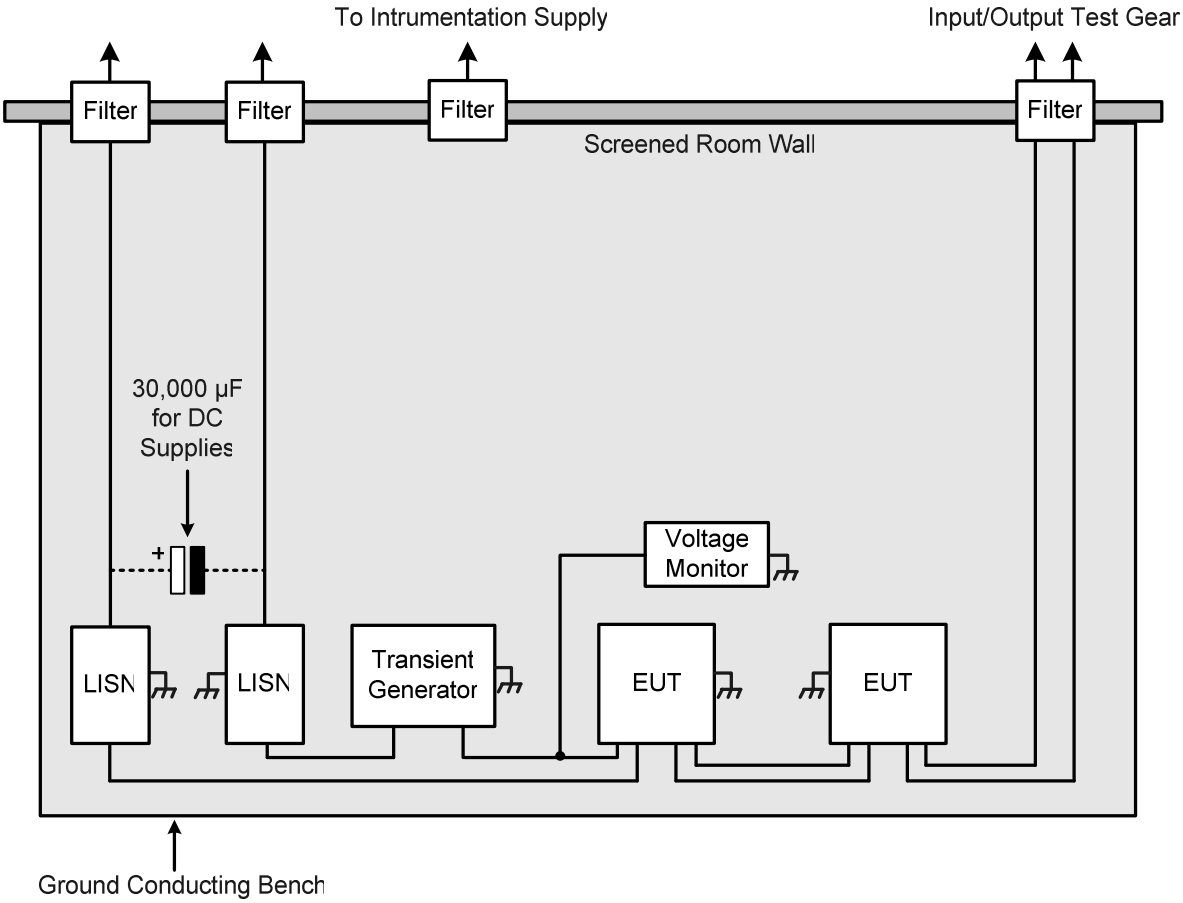

Figure NCS11-3 Typical Test Configuration

26 NCS 12 ELECTROSTATIC DISCHARGE

26.1 NCS12 Applicability

The purpose of this test is to determine whether electrostatic discharges (ESD) transferred to equipment by personnel contact will damage the EUT or lead to the malfunctioning and degradation of its performance.

In service, electrostatic discharges result from charges built up by friction between materials, such as clothing, and inadvertently transferred to equipment by personnel, either directly or indirectly.

This test simulates this process by the use of a high voltage generator, charge storage capacitor and discharge probe.

The test applies to all Air equipment fitted with electronic and active components, particularly non-linear items such as transistors or integrated circuits etc, including Land and Sea Systems equipment if operated in an air-conditioned or protected environment.

This test method utilises the contact technique of applying large ESD transients to EUTs and the limits and equipment classifications are as shown below. The discharges are normally directed to points on the front panel of the EUT, e.g. keyboards, knobs, switches, buttons and indicators, LEDs, slots, grilles, connectors and any metallic parts on the outside of the EUT electrically isolated from ground. Specific points shall be detailed in the EMITP. Where the EMITP specifies non-conductive surfaces to be tested, the contact method shall be substituted by the air discharge method.

Reference should also be made to **Clause 6.20**.

26.2 NCS12 Limit

Equipment shall withstand discharges as specified above at charging voltages appropriate to the Category of the equipment, without malfunction or disturbance.

For Air service the tests shall be applied at one of two severity levels, depending on the category of the equipment:

a. Category A. Safety critical in that the safety of personnel or third parties is placed at risk either directly or indirectly from malfunctioning of the equipment (and hence subsequently the materiel).

b. Category B. Mission critical in that malfunctioning or upset of the equipment functions either reduces damages or prevents the materiel from performing the mission.

ESD testing of Air service equipment not in either of these categories is not normally required but is at the discretion of the Procuring Agencies.

Land service equipment should be subjected to this test method where it is likely to be deployed in environments that give rise to ESD events, such as the dry atmospheric conditions associated with desert scenarios or air-conditioned rooms.

It is not normally required that sea service equipment be subjected to this test method, however if the EUT is to be deployed within an air conditioned environment then this test should be performed.

All equipment deployed in a support role within a classroom or office environment is subject to this test.

Charging Voltage (kV)	Category A Safety Critical	Category B Mission Critical
2	No	Yes
4	Yes	Yes
6	Yes	Yes
8	Yes	No

Table NCS12-1 Application of Charging Voltages by Equipment Category

Note 1: For Munitions testing, the test levels and methods in AECTP 508 –Leaflet ESD Munitions Test Procedures shall be applied.

Note 2: When using the air discharge method, a level of 15 kV must be applied in addition to those shown in **Table NCS12-1** for both Category A and Category B EUTs.

26.3 NCS12 Test Procedure

26.3.1 Purpose

The ESD generator is intended to simulate the current pulse, which arises when a person carrying an electric charge dissipates that charge on contact with the equipment under test (EUT).

26.3.2 Test Equipment

a. ESD Generator - Characteristics of the ESD generator

1. Basic Design of Generator:

   The basic circuit of the generator is shown in **Figure NCS12-1**. A capacitor (C_s) can be charged to a specified voltage and then discharged through the series resistor (R_d) and discharge tip using either the “contact” or “air” discharge methods. In the contact discharge method the discharge tip is held in contact with the EUT and the discharge actuated by the discharge switch within the generator. In the air discharge method the charged electrode of the generator is brought close to the EUT and the discharge actuated by a spark to the EUT. The discharge tip geometry for both the air and contact discharge methods is shown in **Figure NCS12-2**.

2. Output waveform:

   The output current waveform, when the generator is discharged through a 2 Ω calibration resistance, is defined by the rise time to peak. The current, as a percentage of the peak value, shall be measured 30 ns from the start of the waveform and then 60 ns from start. A typical waveform is shown in **Figure NCS12-3**. The rise time (10% to 90% of peak amplitude) is in the range 0.7 ns to 1.0 ns, the current at 30 ns is nominally 53% of peak amplitude and at 60 ns, 27% of peak amplitude. The generator output waveform will be dependent, to some extent, on the inductance of the generator earthing lead. For this reason the same physical lead, in as far as possible the same physical configuration, shall be used both for verifying generator performance and for testing the equipment. It is important that the test oscilloscope (recommended minimum bandwidth 1 GHz) is adequately shielded from energy radiated by the electrostatic discharge and from energy conducted into its power supply.

3. Waveform verification:

   Prior to application of the test the output waveform of the ESD generator must be verified, this is performed with an oscilloscope and a discharge target fixed on a conductive mounting plate measuring 1.5 m x 1.5 m. The Oscilloscope is connected to

the rear of the target via an attenuator so that the voltage seen at its input is reduced to levels that will not damage the instrument. An oscilloscope with a minimum bandwidth of 1 GHz with a storage facility must be used to capture and display the fast rise times of the pulse generated. The oscilloscope should be well shielded from the ESD generator so as not to be adversely effected by the pulse and it may be necessary to insert additional screening between it and the target. An earth return lead connects the generator to a stud on the aluminium sheet to complete the circuit, see **Figure NCS12-4** for the calibration set up.

b. ESD Generator Performance Characteristics

Figure NCS12-5 shows a typical ESD calibration circuit arrangement. The required output current characteristics, using contact discharge and calculated from the voltage measured across the 2 Ω resistor, are shown in **Table NCS12-2** for four test voltages.

Required Charging Voltage (kV)	1st Peak Discharge Current (A ± 10%)	Current (A ± 30%) after 30 ns	Current (A ± 30%) after 60 ns
2	7.5	4	2
4	15.0	8	4
6	22.5	12	6
8	30.0	16	8

Table NCS12-2 ESD Generator Output Requirements

Note: The required rise time (10% to 90% of peak current) shall be in the range 0.7ns to 1.0ns for all charging voltages.

The general outline technical characteristics of the generator shall be compliant with **Table NCS12-3.**

Characteristic	Performance Requirement
Discharge storage capacitor	150 pF ± 10%
Discharge Resistor	330 Ω ± 10%
Extra High Tension (EHT) output	Up to 15 kV DC
EHT metering	2 kV to 12 kV ± 5%
Output polarity	Positive and negative (switchable)
Holding time	The ESD generator shall be able to hold its charge for at least 5 s without falling below 90% of its pre-set value.
Discharge modes	(a) Single discharge (b) Repetitive discharge (c) Contact discharge
Output current	The output current waveform developed in the 2 Ω calibration resistor shall be as shown in Figure NCS12-3.

Table NCS12-3 Outline Technical Characteristics of ESD Generator

26.3.3 Setup

The test setup shall be as follows:

a. The EUT shall be set up as shown in **Figure NCS12-6** and in order to minimise the impact of environmental parameters on test results, the tests shall be carried out under the following laboratory conditions:

   (1) Ambient Temperature: 15ºC to 35ºC

   (2) Relative Humidity: 30 % to 60 %

b. Verify the test waveform using an oscoscope and test target.

c. Connect any EUT earth bond connections to the ground reference plane and support EUT on 50 mm stand offs above ground plane surface.

d. Connect the discharge return lead to the ground reference plane.

26.3.4 Procedures

The test procedures shall be as follows:

a. The tests shall be conducted by applying discharges to each of the specified application points listed in the EMITP, using the charging voltage sequence 2, 4, 6 and 8 kV until the limit for the EUT category is reached. For each charging voltage, five discharges shall be applied at each point for each polarity, allowing a 10s interval between discharges. The tests shall be repeated for each mode of operation of the EUT and all malfunctions and disturbances, whether temporary or permanent, shall be recorded.

b. Where the air discharge method is used on non-conductive surfaces the generator will be set to a repetition rate of 20 pulses per second and the generator's discharge tip should be moved slowly across the area to be tested. The test engineer should note any discharges seen and their effect on the EUT's operation in the test report.

26.3.5 Data Presentation

Data presentation shall be as follows:

a. A clear record of all discharge points, either in a table or as a diagram, must be kept by the test house, and included in the EMITR.

b. Descriptions of any failure observed should be recorded with the appropriate level and contact position and included in the EMITR.

c. Graphical evidence of the discharge gun's compliance with the specified waveform during the verification test should be retained by the test house and included in the EMITR.

d. All malfunctions, disruptions or anomalous behaviour of the EUT during ESD, whether such manifestations occur during charging of the ESD generator, during the discharge, or during recovery shall be recorded in the EMITR.

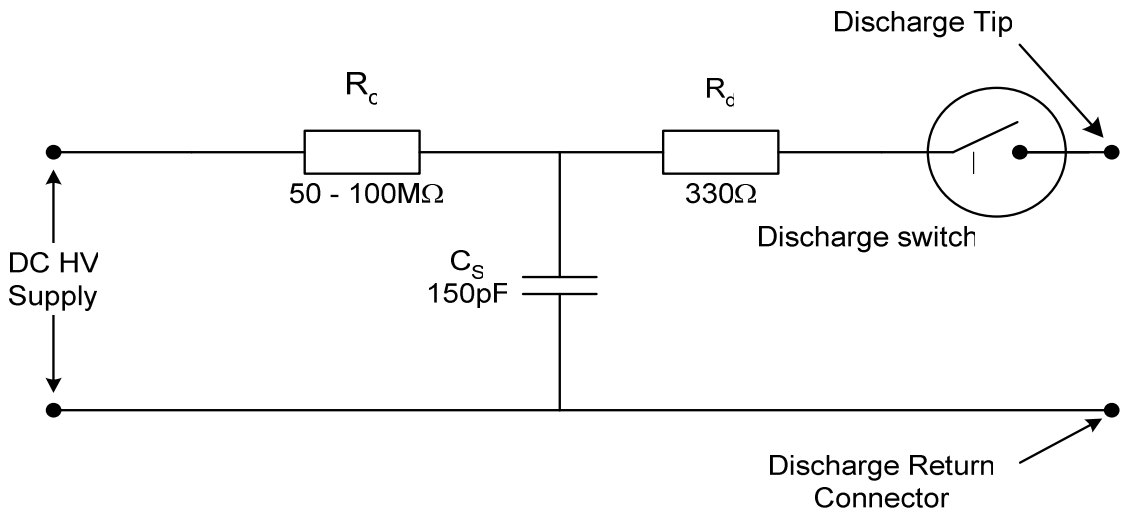

Figure NCS12-1 Simplified Circuit Diagram of the ESD Generator

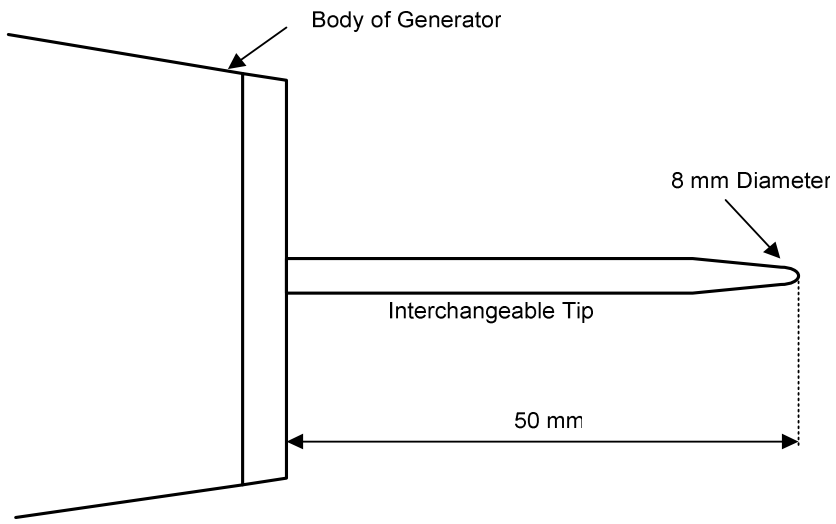

Figure NCS12-2 ESD Generator Discharge Tip Geometry

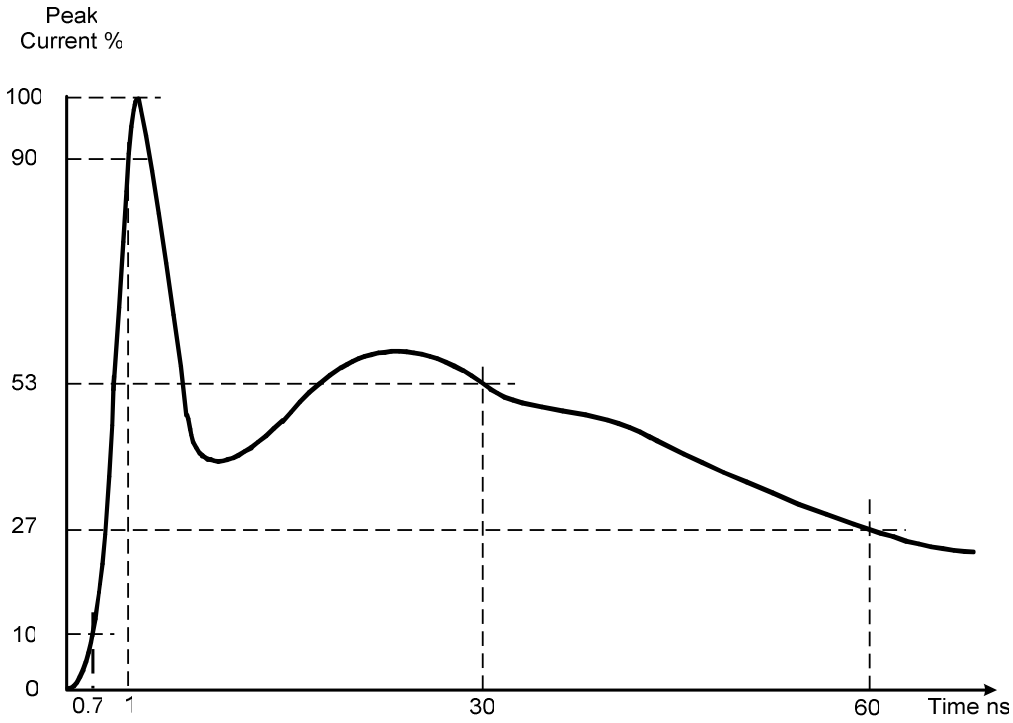

Figure NCS12-3 Typical Type 4 ESD Waveform

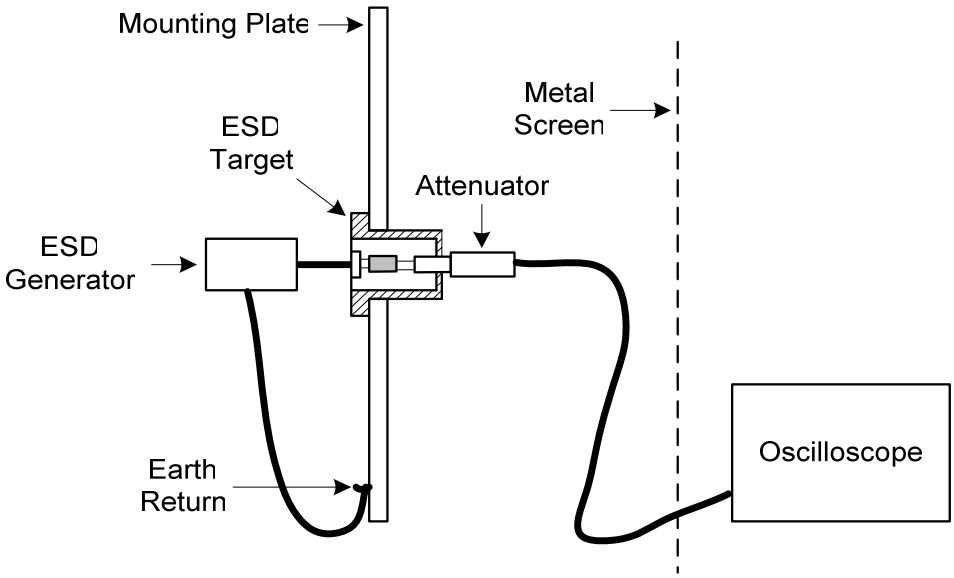

Figure NCS12-4 Generator Calibration Setup

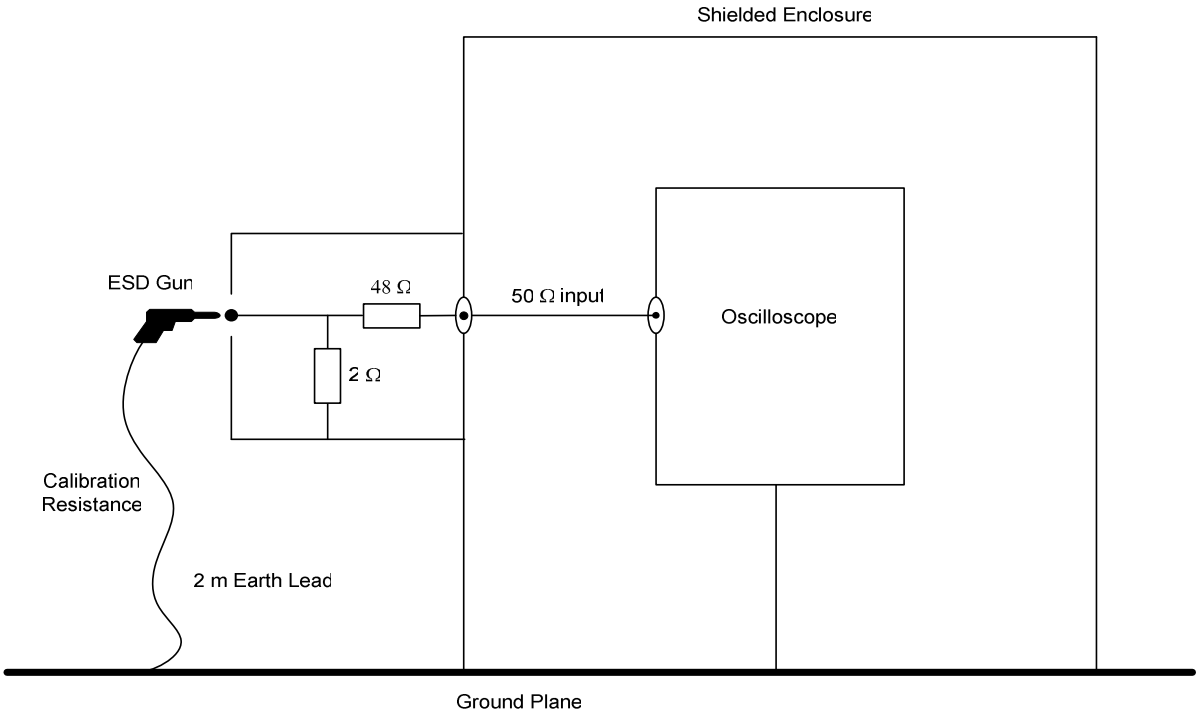

Figure NCS12-5 ESD Calibration Arrangement

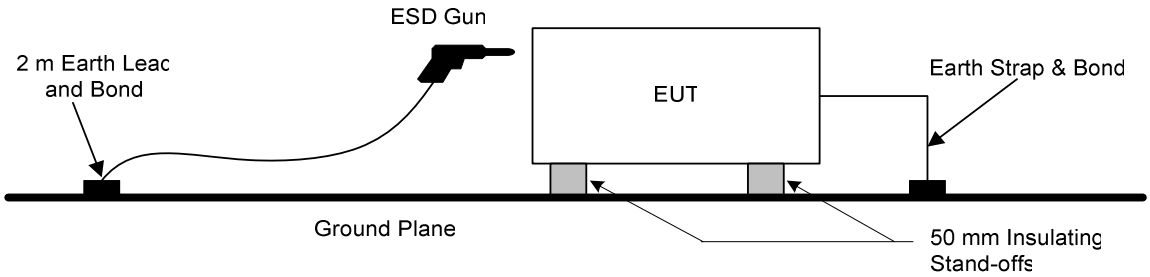

Figure NCS12-6 Typical Test Configuration

27 NCS13 CONDUCTED SUSCEPTIBILITY, TRANSIENTS, POWER LEADS

27.1 NCS13 Applicability

This requirement is applicable to submarine and surface ship equipment and subsystem AC and DC input power leads, not including grounds and neutrals. Reference should also be made to **Clause 6.21**.

27.2 NCS13 Limit

The EUT shall not exhibit any malfunction, degradation of performance, or deviation from specified indications, beyond the tolerances indicated in the individual equipment or subsystem specification, when subjected to a test signal with voltage levels as specified in **Figure NCS13-1**.

27.3 NCS13 Test Procedure

27.3.1 Purpose

This test procedure is used to verify the ability of the EUT to withstand signals coupled onto input power leads.

27.3.2 Test Equipment

The test equipment shall be as follows:

a. Transient generator, $\leq$ 2 Ohm source impedance

b. Capacitor, 10 μf

c. Oscilloscope

d. Resistor, 5 Ω

e. Isolation transformer

27.3.3 Setup

The test setup shall be as follows:

a. Maintain a basic test setup for the EUT as shown and described in **Figures 501-3** through to **501-6** and **Clause 4.3.8**.

b. Calibration. Configure the test equipment in accordance with **Figure NCS13-2**. Set up the oscilloscope to monitor the specified voltage across the 5 Ω non-inductive resistor.

c. EUT testing.

(1) For DC or single phase AC power, configure the test equipment as shown in **Figure NCS13-3**.

(2) For three phase ungrounded power, configure the test setup as shown in **Figure NCS13-4**.

(3) For three phase wye power (four power leads), configure the test setup as shown in **Figure NCS13-4**.

27.3.4 Procedures

The test procedures shall be as follows:

a. Turn on the measurement equipment and allow sufficient time for stabilization.

b. Calibration

(1) Set the transient generator to the lowest test frequency.

(2) Increase the applied signal until the oscilloscope indicates the voltage level corresponding to the limit. Verify the output waveform and pulse width.

(3) Record the setting of the signal source.

c. EUT Testing

(1) Turn on the EUT and allow sufficient time for stabilization. CAUTION: Exercise care when performing this test since the "safety ground" of the oscilloscope is disconnected due to the isolation transformer and a shock hazard may be present.

(2) Set the transient generator to minimum output. Increase the signal level until the required voltage is reached on the power lead or spike generator calibration set point is obtained. (Note: Calibration set point is that obtained in 27.3.4b(2)).

(3) While maintaining at least the required signal level, apply pulses to the test samples ungrounded input lines at a pulse repetition rate of between 5 and 10 pulses per second for not less than 5 minutes.

(4) Susceptibility Evaluation

(a) Monitor the EUT for degradation of performance.

(b) If susceptibility is noted, determine and record its threshold level and phase position on the AC waveform in accordance with **Clause 4.3.10.4.3** and verify that it is above the limit.

(5) Repeat 27.3.4c(2) through 27.3.4c(4) for each power lead and test condition, as required.

27.3.5 Data Presentation

Data presentation shall be as follows:

a. Provide oscilloscope photographs of the calibration waveform obtained in 3.4.b(2).

b. Provide oscilloscope photographs of the injected waveform for each lead.

c. Provide data on any susceptibility thresholds that were determined for each power lead.

d. Provide indications of compliance with the applicable requirements for the susceptibility evaluation specified in 3.5.c for each lead.

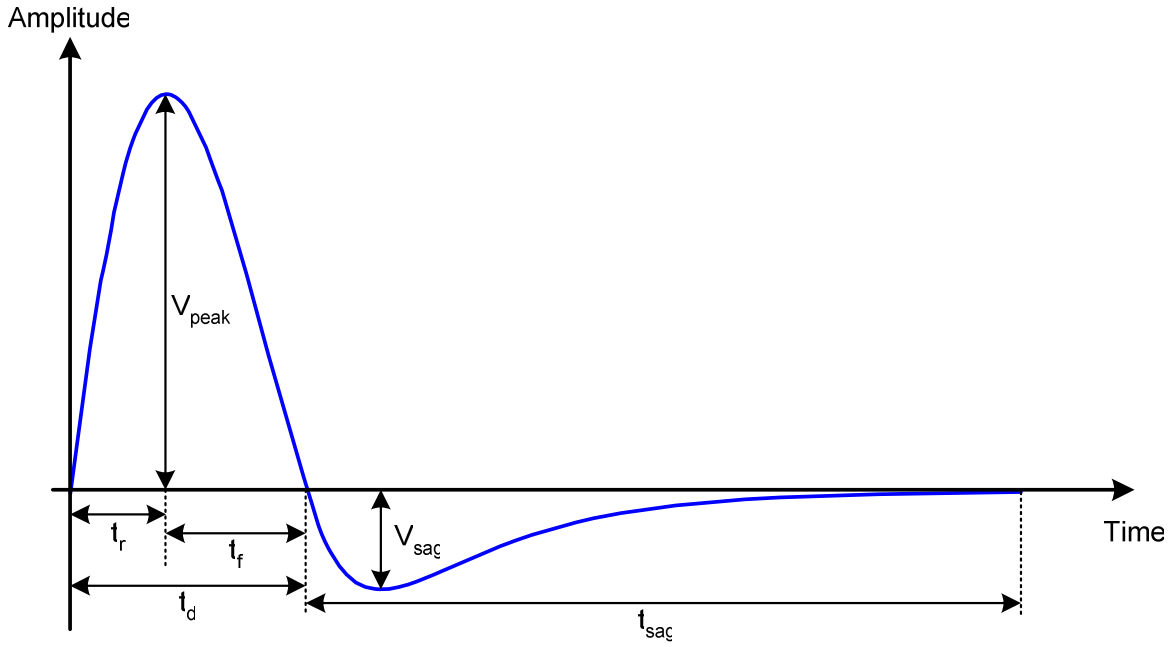

Where:

V_{peak} = 400 volt peak
t_r = 1.5 µsec ±0.5 µsec
t_f = 3.5 µsec ±0.5 µsec
t_d = 5.0 µsec ±22%
V_{sag} ≤ 120 volt peak (maximum)
t_{sag} ≤ 20 µsec

Measured across a 5 Ω non-inductive resistor

Figure NCS13-1 **Voltage Limit**

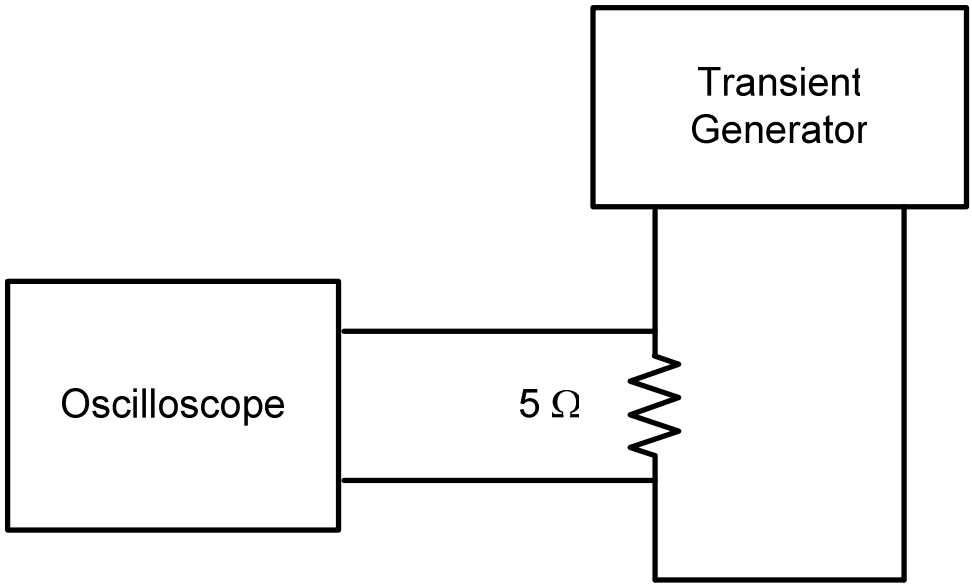

Figure NCS13-2 **Calibration**

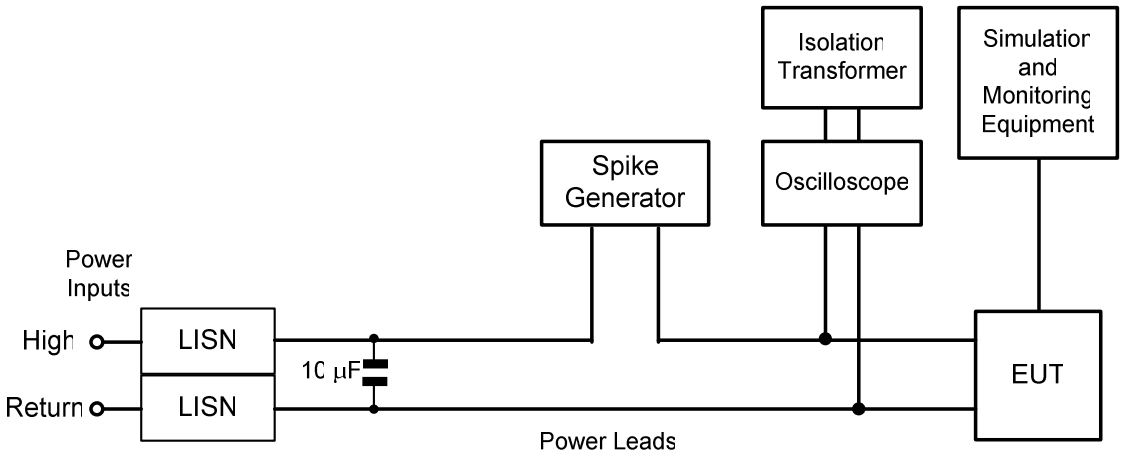

Figure NCS13-3 **Signal Injection, DC or Single Phase AC**

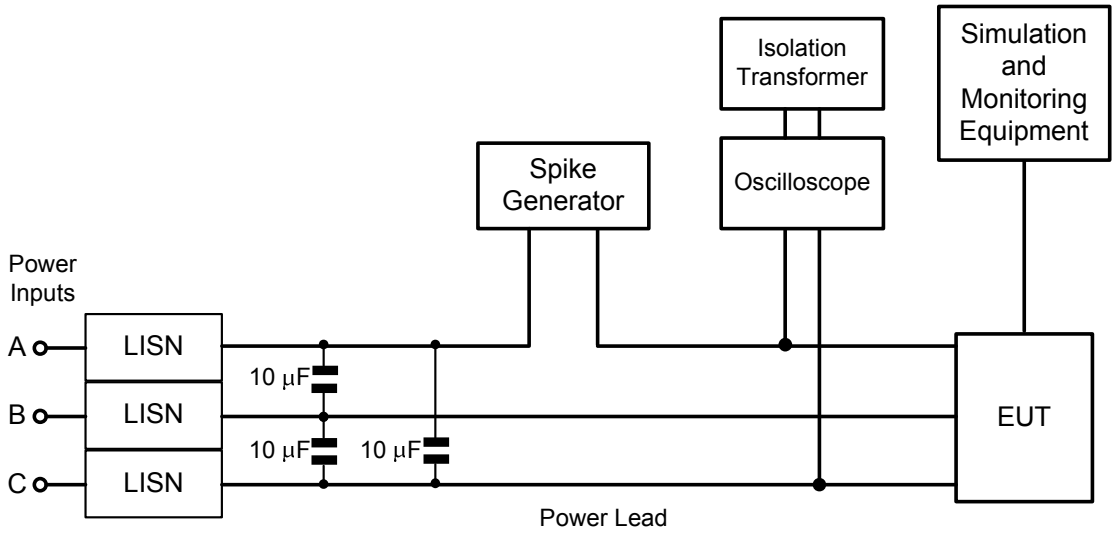

Figure NCS13-4 Signal Injection, 3-Phase Ungrounded

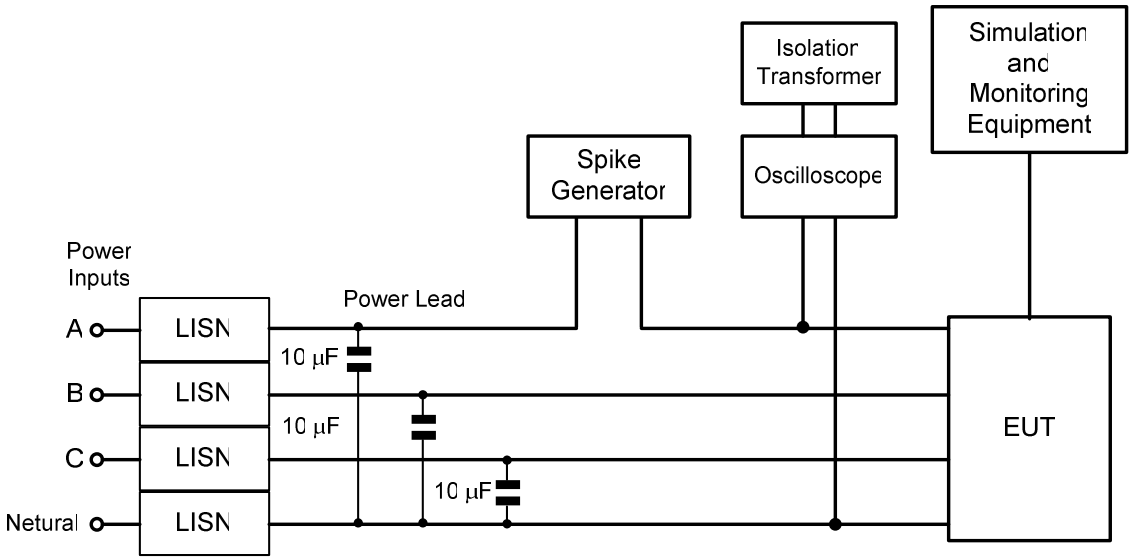

Figure NCS13-5 Signal Injection, 3-Phase Wye

28 NRE01 RADIATED EMISSIONS, MAGNETIC FIELD, 30 Hz to 100 kHz

28.1 NRE01 Applicability

This requirement is applicable for radiated emissions from equipment and subsystem enclosures, including electrical cable interfaces. The requirement does not apply to radiation from antennas. Aircraft fitted with Anti-Submarine Warfare (ASW) capability should be tested using the Sea application limit. Reference should also be made to **Clause 6.22**.

28.2 NRE01 Limit

Magnetic field emissions shall not be radiated in excess of the levels shown in **Figures NRE01-1** to **NRE01-3** at a distance of 7 cm for Air Land or Sea.

28.3 NRE01 Test Procedures

28.3.1 Purpose

This test procedure is used to verify that the magnetic field emissions from the EUT and its associated electrical interfaces do not exceed specified requirements.

28.3.2 Test Equipment

The test equipment shall be as follows:

a. Measurement receivers

b. Data recording device

c. Loop sensor having the following specifications:

(1)	Diameter:	13.3 cm
(2)	Number of turns:	36
(3)	Wire:	7-41 Litz wire (7 strand, No. 41 AWG)
(4)	Shielding:	Electrostatic
(5)	Correction factor	See manufacturer's data for factors to convert measurement receiver readings to decibels above one picotesla (dBpT).

d. 50µH LISNs

e. Ohmmeter

f. Signal Generator

28.3.3 Setup

The test setup shall be as follows:

a. Maintain a basic test setup for the EUT as shown and described in **Figures 501-3** through to **501-6** and **Clause 4.3.8**.

b. Calibration. Configure the measurement setup as shown in **Figure NRE01-4**.

c. EUT Testing. Configure the measurement receiving loop and EUT as shown in **Figure NRE01-5**.

28.3.4 Procedures

The test procedures shall be as follows:

a. Turn on the measurement equipment and allow sufficient time for stabilization.

b. Calibration.

(1) Apply a calibrated signal level, which is at least 6 dB below the limit (limit minus the loop sensor correction factor), at a frequency of 50 kHz. Tune the measurement receiver to a centre frequency of 50 kHz. Record the measured level.

(2) Verify that the measurement receiver indicates a level within ±3 dB of the injected signal level.

(3) If readings are obtained which deviate by more than ±3 dB, locate the source of the error and correct the deficiency prior to proceeding with the testing.

(4) Using an ohmmeter, verify that the resistance of the loop sensor winding is approximately 10 Ω.

c. EUT Testing

(1) Turn on the EUT and allow sufficient time for stabilization.

(2) Locate the loop sensor 7 cm from the EUT face or electrical interface connector being probed. Orient the plane of the loop sensor parallel to the EUT faces and parallel to the axis of connectors.

(3) Scan the measurement receiver over the applicable frequency range to locate the frequencies of maximum radiation, using the bandwidths and minimum measurement times of **Table 501-2**.

(4) Tune the measurement receiver to one of the frequencies or band of frequencies identified in 28.3.4c(3) above.

(5) Monitor the output of the measurement receiver while moving the loop sensor (maintaining the 7 cm spacing) over the face of the EUT or around the connector. Note: the point of maximum radiation for each frequency identified in 28.3.4c(4).

(6) At 7 cm from the point of maximum radiation, orient the plane of the loop sensor to give a maximum reading on the measurement receiver and record the reading. If the measured emission exceeds the limit at 7 cm distance, increase the measurement distance until the emission falls within the specified limit. Record the emission frequency and the measurement distance for assessment by the procuring activity.

Note:The EUT is required to comply with the applicable NRE01 limit at 7 cm.

(7) Repeat 28.3.4c(4) through 28.3.4c(6) for at least two frequencies of maximum radiation per octave of frequencies below 200 Hz and for at least three frequencies of maximum radiation per octave above 200 Hz.

(8) Repeat 28.3.4c(2) through 28.3.4c(7) for each face of the EUT and for each EUT electrical connector.

28.3.5 Data Presentation

Data presentation shall be as follows:

a. Provide graphs of scans and tabular listings of each measurement frequency, mode of operation, measured magnetic field, and magnetic field limit level.

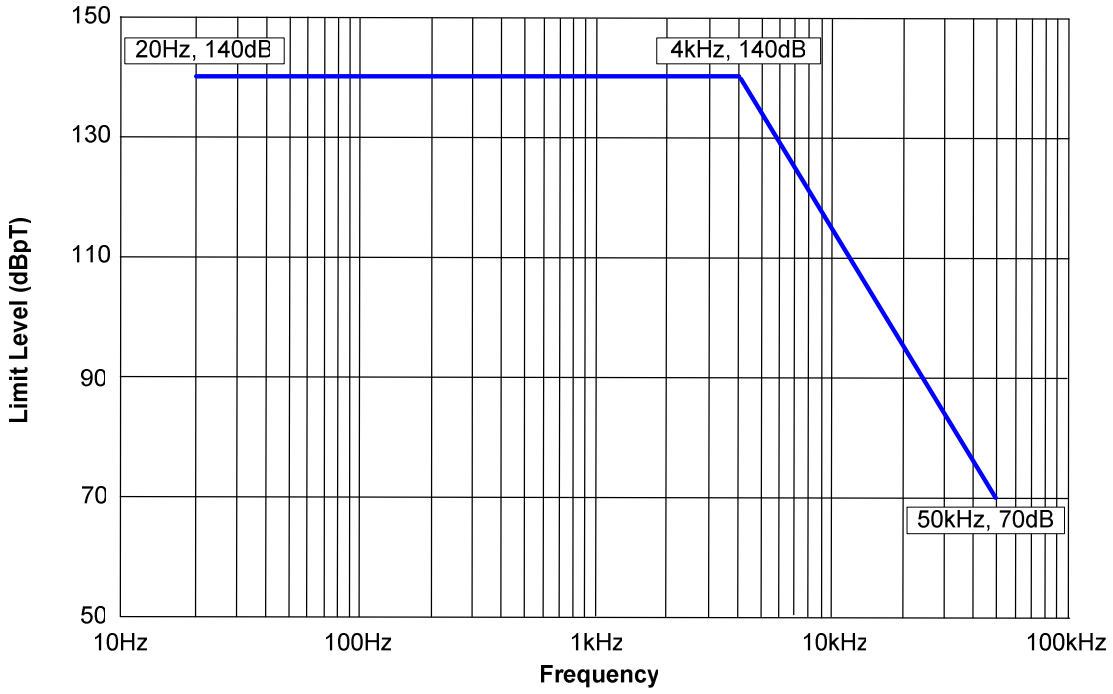

Figure NRE01-1 Limit for Air Applications

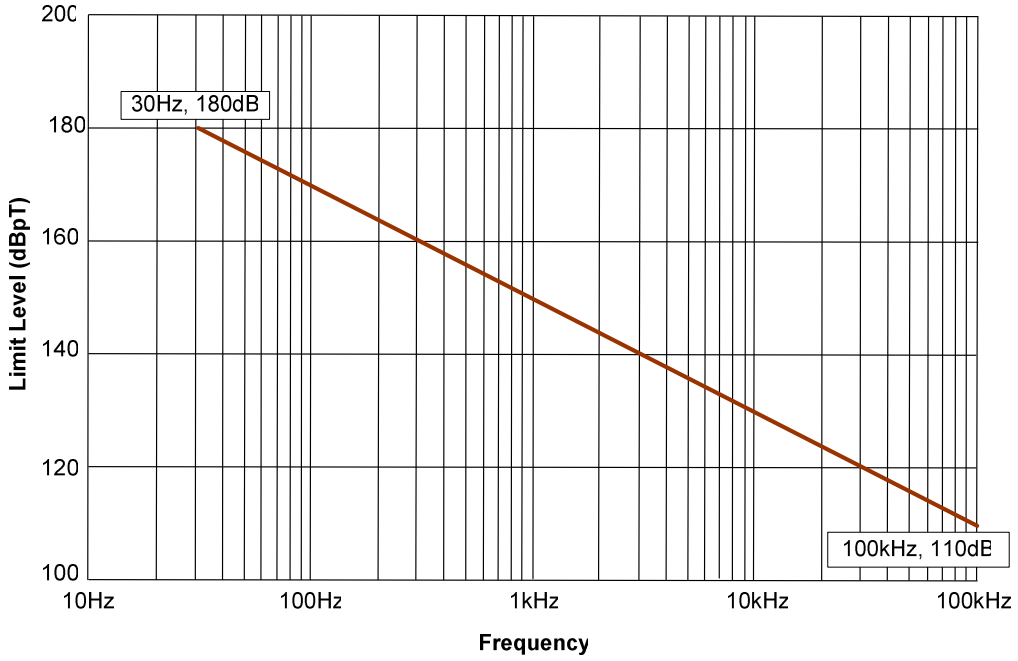

Figure NRE01-2 Limit for Land Applications

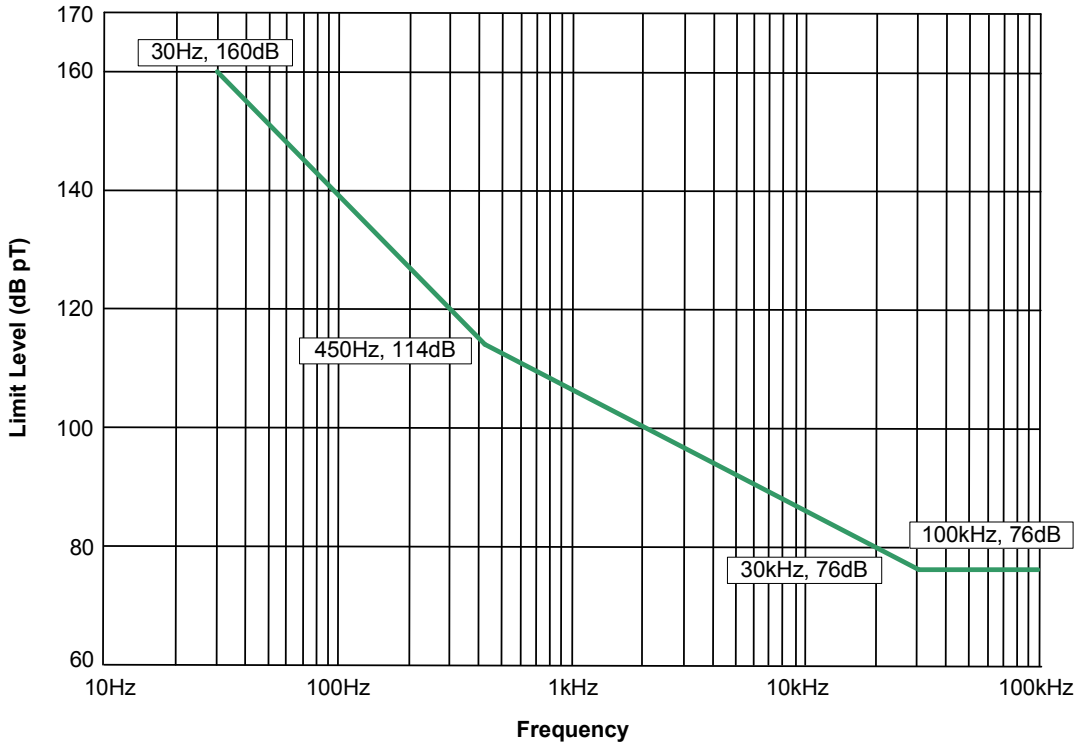

Figure NRE01-3 Limit for all Sea Applications

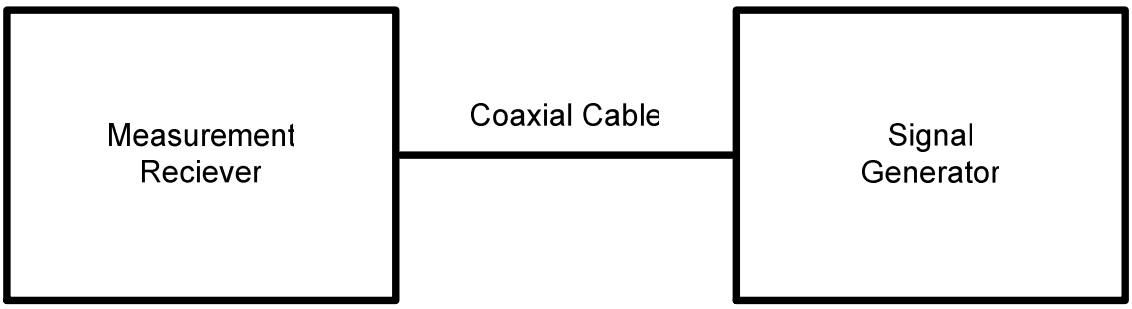

Figure NRE01-4 Calibration Configuration

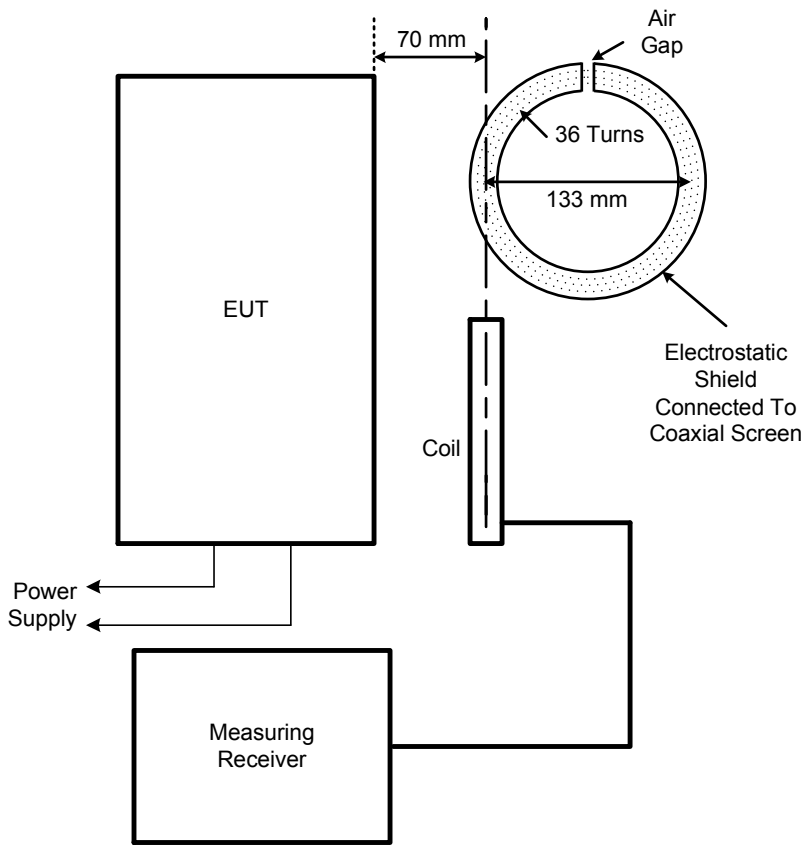

Figure NRE01-5 Basic Test Setup

29 NRE02 RADIATED EMISSIONS, ELECTRIC FIELD, 10 kHz to 18 GHz

29.1 NRE02 Applicability

This requirement is applicable for radiated emissions from equipment and subsystem enclosures, all interconnecting cables, and antennas designed to be permanently mounted to EUTs (receivers and transmitters in standby mode). The requirement does not apply at the transmitter fundamental frequencies and the necessay occupied bandwidth of the signal.

The requirement is for testing from 10 kHz to 18 GHz for all applications with an option to restrict testing to 1 GHz or 10 times the highest intentionally generated frequency (whichever is higher) for all applications except those associated with Air where testing must be performed to 18 GHz.

Reference should also be made to **Clause 6.23**.

29.2 NRE02 Limits

Electric field emissions shall not be radiated in excess of those shown in **Figures NRE02-1** through to **NRE02-4**. Above 30 MHz, the limits shall be met for both horizontally and vertically polarized fields.

29.3 NRE02 Test Procedures

29.3.1 Purpose

This test procedure is used to verify that electric field emissions from the EUT and its associated cabling do not exceed specified requirements.

29.3.2 Test Equipment

The test equipment shall be as follows:

a. Measurement Receivers

b. Data Recording Device

c. Antennas

(1) 10 kHz to 30 MHz, 104 cm rod with impedance matching network. The signal output connector shall be bonded to the antenna matching network case.

(a) When the impedance matching network includes a preamplifier (Active Rod), observe the overload precautions in **Clause 4.3.7.3**.

(b) Use a square counterpoise measuring at least 60 cm on a side.

(2) 30 MHz to 200 MHz, Biconical, 137 cm tip to tip

(3) 200 MHz to 1 GHz, Double Ridge Horn, 69.0 by 94.5 cm opening

(4) 1 GHz to 18 GHz, Double Ridge Horn, 24.2 by 13.6 cm opening

d. Signal Generators

e. Stub Radiator

f. Capacitor, 10 pF

g. 50 µH LISNs

29.3.3 Setup

The test setup shall be as follows:

a. Maintain a basic test setup for the EUT as shown and described in Category 501 **Figures 501- 2** through to **501-6** and **Clause 4.3.8**. Ensure that the EUT is oriented such that the surface that produces the maximum radiated emissions is toward the front edge of the test setup boundary.

b. Calibration. Configure the test equipment as shown in **Figure NRE02-5**.

c. EUT Testing

1. For rod atenna measurements, electrical bonding of the counterpoise is prohibited. The reqiored configuration is shown in **Figure NRE02-6**. The shield of the coaxial cable from the rod antenna matching network shall be electrically bonded to the floor in a length as short as possible (not to exceed 10 cm excess length). A ferrite sleeve with 20 to 30 ohms impedance at 20 MHz shall be placed near the center of the coaxial cable length between the antenna matching network and the floor.

2. Antenna Positioning

(a) Determine the test setup boundary of the EUT and associated cabling for use in positioning of antennas.

(b) Use the physical reference points on the antennas shown in **Figure NRE02-6** for measuring heights of the antennas and distances of the antennas from the test setup boundary.

i. Position antennas 1 metre from the front edge of the test setup boundary for all setups

ii. Position antennas 120 cm above the floor ground plane.

iii. Ensure that no part of any antenna is closer than 1 metre from the walls and 0.5 metres from the ceiling of the shielded enclosure

(c) The number of required antenna positions depends on the size of the test setup boundary and the number of enclosures included in the setup.

i. For testing below 200 MHz, use the following criteria to determine the individual antenna positions:

a. For setups with the side edges of the boundary 3 m or less, only one position is required and the antenna shall be centred with respect to the side edges of the boundary

b. Setups with the side edges of the boundary greater than 3 m use multiple antenna positions at spacings as shown in **Figure NRE02-7**. Determine the number of antenna positions (N) by dividing the edge-to-edge boundary distance (in metres) by 3 and rounding up to an integer

ii. For testing from 200 MHz up to 1 GHz: Place the antenna in a sufficient number of positions such that the entire width of each EUT enclosure and the first 35 cm of cables and leads interfacing with the EUT enclosure are within the 3 dB beamwidth of the antenna.

iii. For testing at 1 GHz and above: Place the antenna in a sufficient number of positions such that the entire width of each EUT enclosure and the first 7 cm of cables and leads interfacing with the EUT enclosure are within the 3 dB beamwidth of the antenna.

29.3.4 Procedures

The test procedures shall be as follows:

a. Verify that the ambient requirements specified in **Clause 4.3.4** of are met. Take plots of the ambient when required by the referenced paragraph.

b. Turn on the measurement equipment and allow a sufficient time for stabilization.

c. Using the system check path of **Figure NRE02-5**, perform the following evaluation of the overall measurement system from each antenna to the data output device at the highest measurement frequency of the antenna. For rod antennas that use passive matching networks, the evaluation shall be performed at the centre frequency of each band. For active rod antennas, the evaluation shall be performed at the lowest frequency of test, at a mid-band frequency, and at the highest frequency of test.

   (1) Apply a calibrated signal level, which is at least 6 dB below the limit (limit minus antenna factor), to the coaxial cable at the antenna connection point.

   (2) Scan the measurement receiver in the same manner as a normal data scan. Verify that the data recording device indicates a level within ±3 dB of the injected signal level.

   (3) For the 104 cm rod antenna, remove the rod element and apply the signal to the antenna matching network through a 10 pF capacitor connected to the rod mount as shown in **Figure NRE02-8**. Commercial calibration jigs or injection networks shall not be used.

   (4) If readings are obtained which deviate by more than ±3 dB, locate the source of the error and correct the deficiency prior to proceeding with the testing.

d. Using the measurement path of **Figure NRE02-5**, perform the following evaluation for each antenna to demonstrate that there is electrical continuity through the antenna.

   (1) Radiate a signal using an antenna or stub radiator at the highest measurement frequency of each antenna.

   (2) Tune the measurement receiver to the frequency of the applied signal and verify that a received signal of appropriate amplitude is present. Note: This evaluation is intended to provide a coarse indication that the antenna is functioning properly. There is no requirement to accurately measure the signal level.

e. Turn on the EUT and allow sufficient time for stabilization.

f. Using the measurement path of **Figure NRE02-5**, determine the radiated emissions from the EUT and its associated cabling.

   (1) Scan the measurement receiver for each applicable frequency range, using the bandwidths and minimum measurement times in **Table 501-2**.

   (2) Above 30 MHz, orient the antennas for both horizontally and vertically polarized fields.

   (3) Take measurements for each antenna position determined under **29.3.3d (3)** above.

29.3.5 Data Presentation

Data presentation shall be as follows:

a. Continuously and automatically plot amplitude versus frequency profiles. Manually gathered data is not acceptable except for plot verification. Vertical and horizontal data for a particular frequency range shall be presented on separate plots or shall be clearly distinguishable for a common plot.

b. Display the applicable limit on each plot.

c. Provide a minimum frequency resolution of 1% or twice the measurement receiver bandwidth, whichever is less stringent, and a minimum amplitude resolution of 1 dB for each plot.

d. Provide plots for both the measurement and system check portions of the procedure.

e. Provide a statement verifying the electrical continuity of the measurement antennas as determined in **Clause 29.3.4 d**.

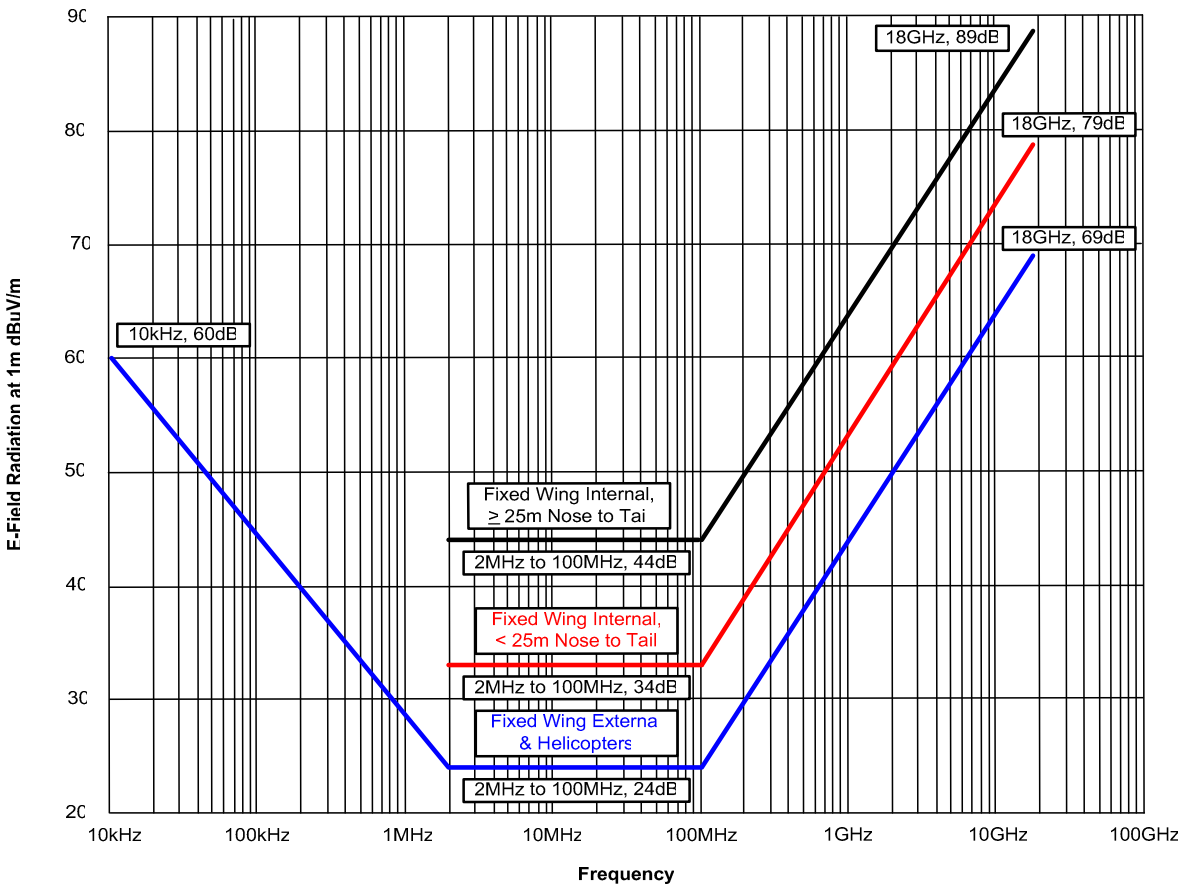

Figure NRE02-1 Limits for Air and Space System Application

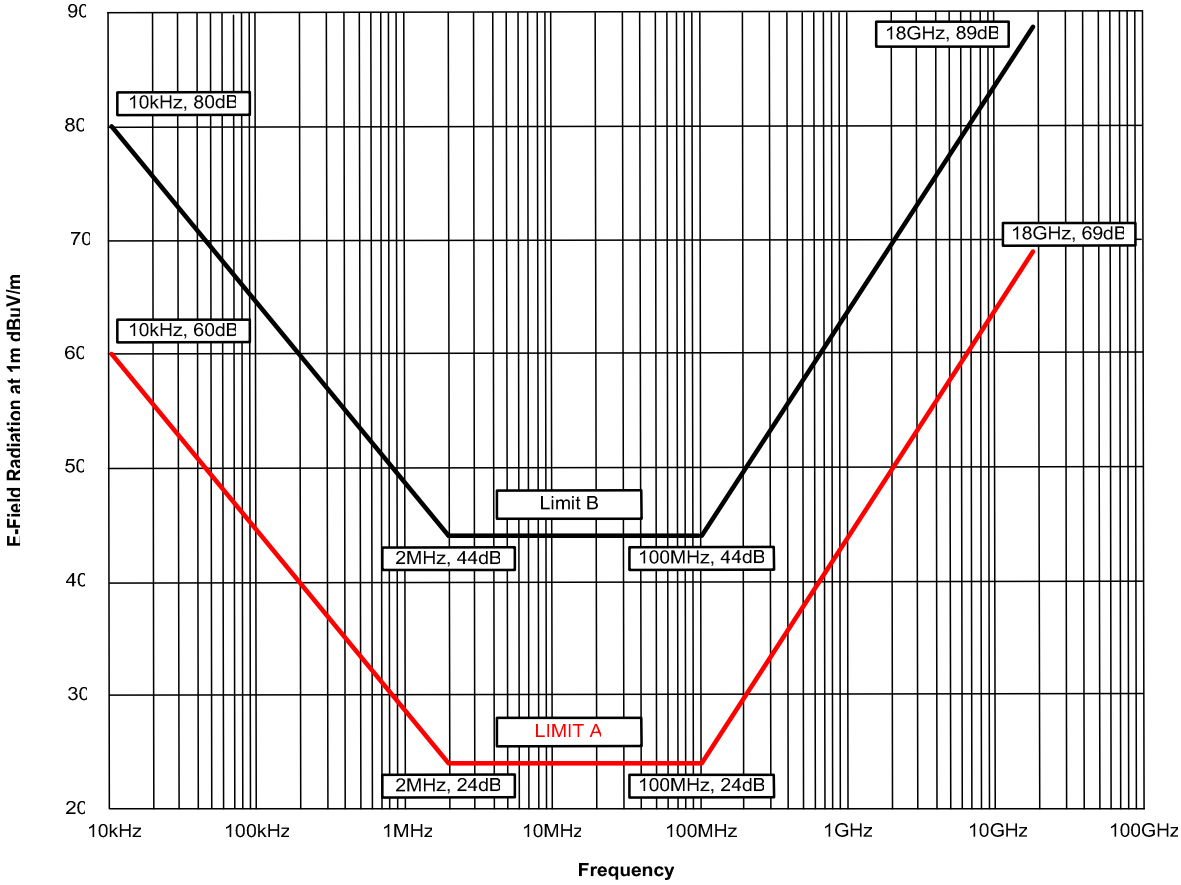

Figure NRE02-2 Limits for Land Application

Note 1: The use of limit A above is reserved for all land based EUTs procured for Army use and Mobile Sea Systems, deployed in a land based role.

Note 2: Limit B is utilised for fixed Sea System Installations such as those associated with Port and RADAR emplacements,

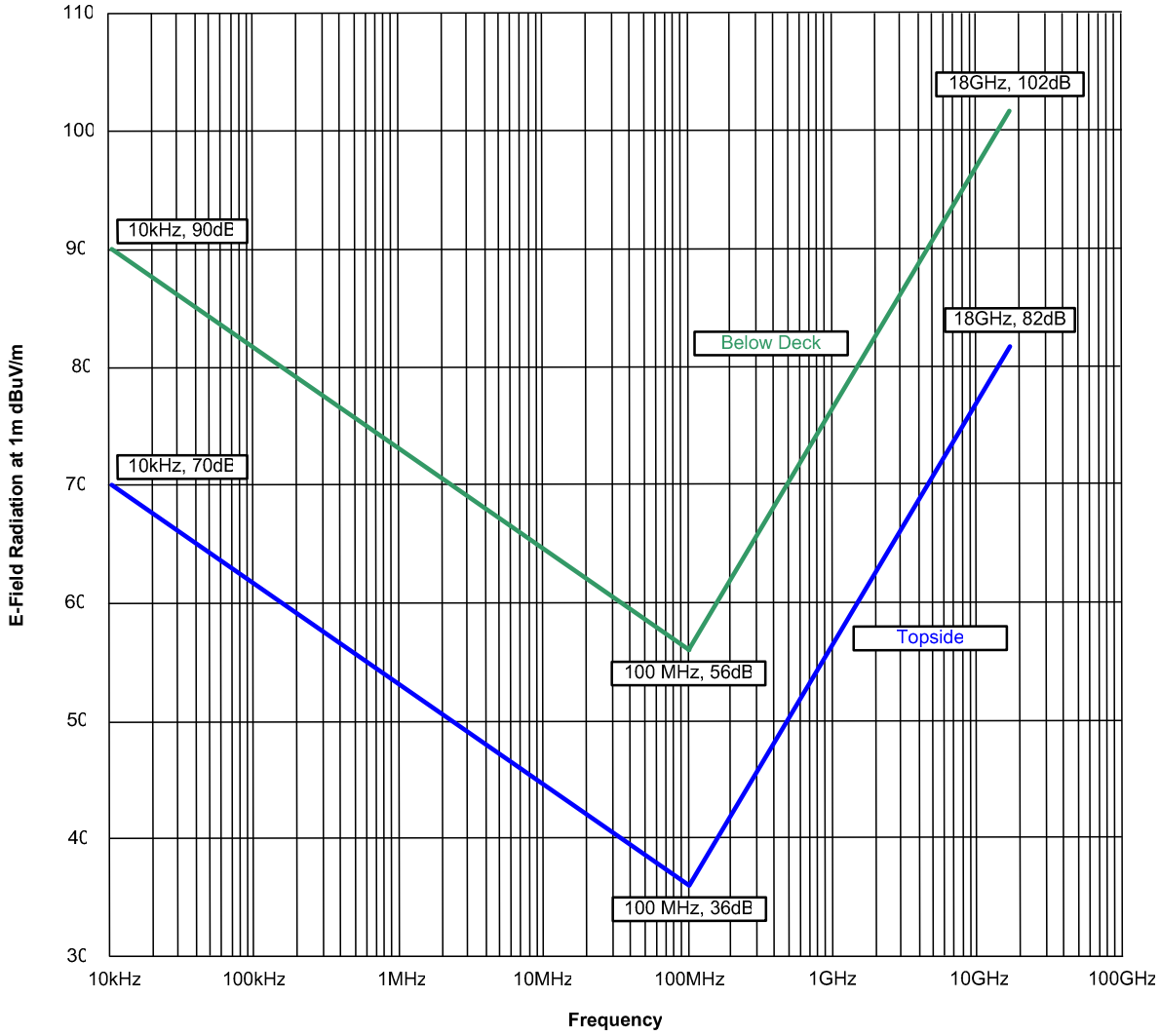

Figure NRE02-3 Limits for Surface Sea Application

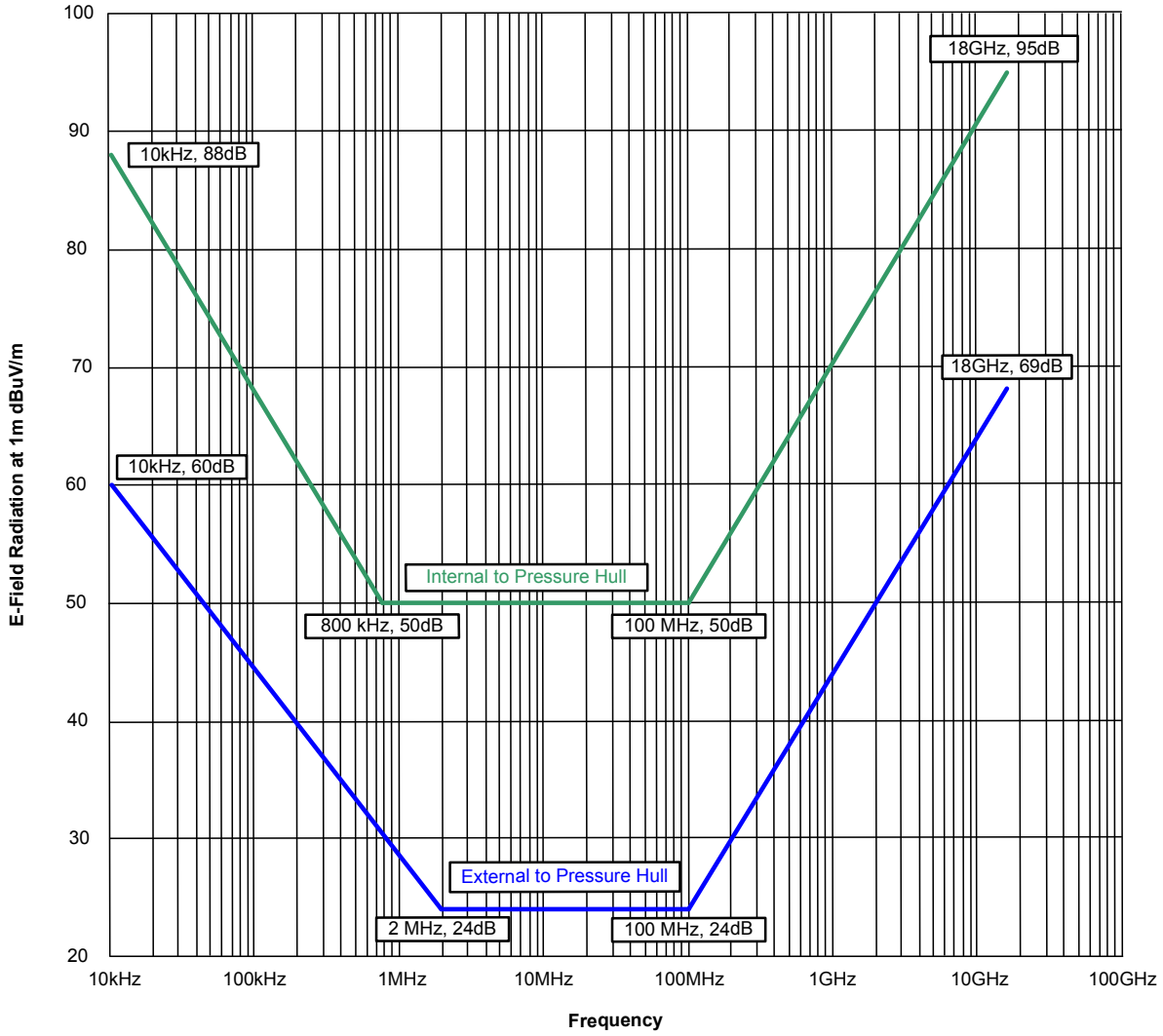

Figure NRE02-4 Limits for Submarine Application

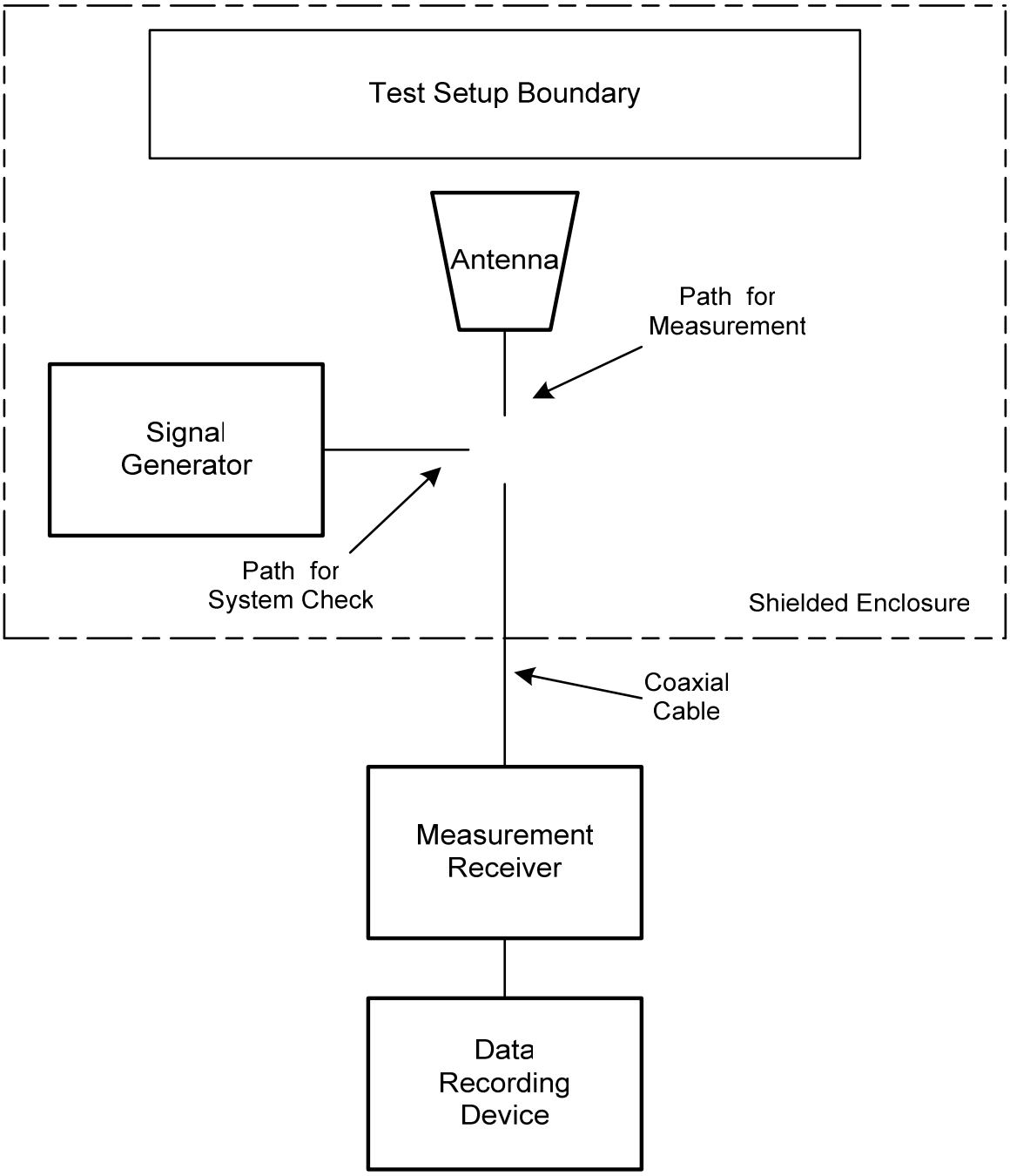

Figure NRE02-5 **Basic Test Setup**

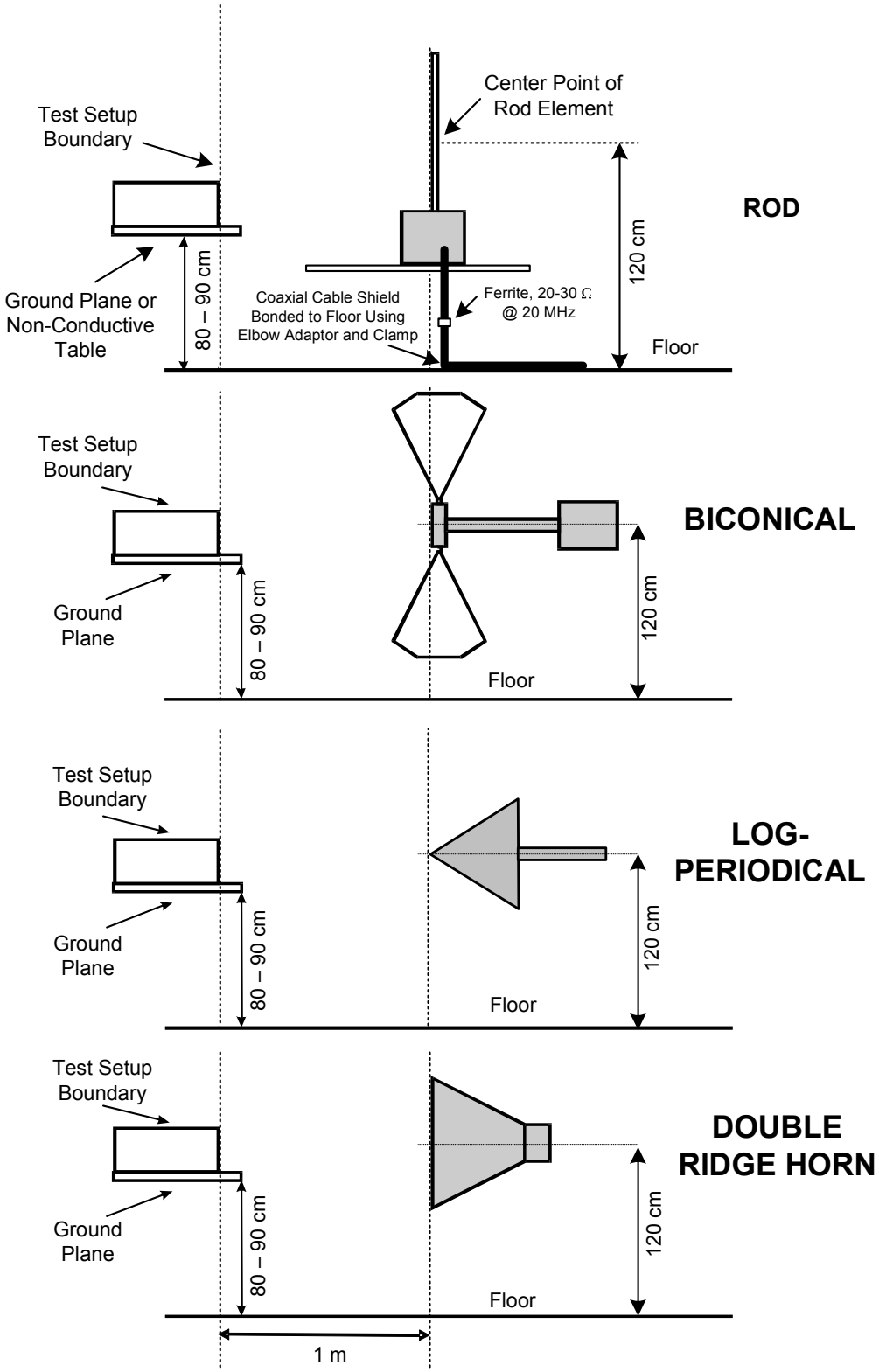

Figure NRE02-6 **Antenna Positioning**

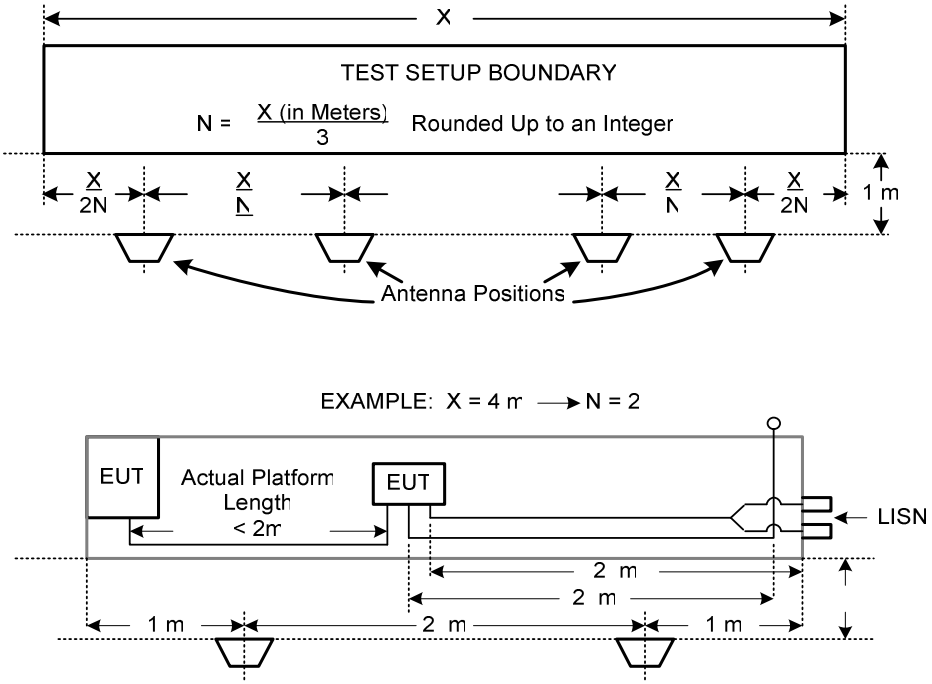

Figure NRE02-7 Multiple Antenna Positions

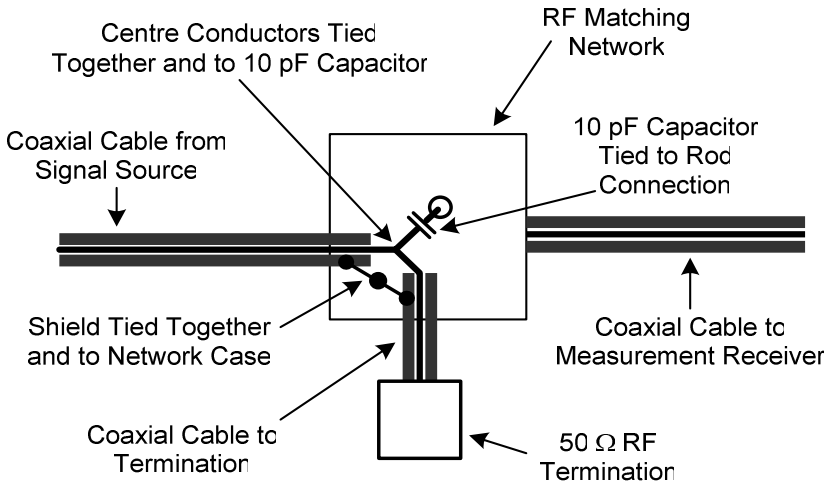

Notes:

1 Each Individual Wire Connection Limited to 5 cm length maximum

2 50 Ω Termination may be replaced with 50 Ω Measurement Receiver to verify Level of Injected Signal

3 The 10 pF Capacitor may be built into some Antenna Matching Networks

Figure NRE02-8 Rod Antenna System Check

30 NRE03 RADIATED EMISSIONS, ANTENNA SPURIOUS and HARMONIC OUTPUTS 10 kHz to 40 GHz

30.1 NRE03 Applicability

This requirement may be used as an alternative for NCE03 when testing transmitters with their intended antennas. NCE03 is the preferred requirement unless the equipment or subsystem design characteristics preclude its use. The requirement is not applicable within the EUT necessary bandwidth and within ±5 % of the fundamental frequency. Depending on the operating frequency range of the EUT, the start frequency of the test is shown in **Table NRE03-1**:

Operating Frequency Range (EUT)	Start Frequency of Test
10 kHz to 3 MHz	10 kHz
3 MHz to 300 MHz	100 kHz
300 MHz to 3 GHz	1 MHz
3 GHz to 40 GHz	10 MHz

Table NRE03-1 Operating Frequency Range of EUT

The end frequency of the test is 40 GHz or twenty times the highest generated frequency within the EUT, whichever is less. For equipment using waveguide, the requirement does not apply below eight-tenths of the waveguide's cut-off frequency. Reference should also be made to **Clause 6.24**.

30.2 NRE03 Limits

Harmonics, except the second and third, and all other spurious emissions shall be at least 80 dB down from the level at the fundamental. The second and third harmonics shall be suppressed to a level of –20 dBM or 80 dB, whichever requires less suppression.

30.3 NRE03 Test Procedures

30.3.1 Purpose

This test procedure is used to verify that radiated spurious and harmonic emissions from transmitters do not exceed the specified requirements.

30.3.2 Test Equipment

The test equipment shall be as follows:

a. Measurement receiver
b. Attenuators, 50 Ω
c. Antennas
d. Rejection networks
e. Signal generators
f. Power monitor

30.3.3 Setup

It is not necessary to maintain the basic test setup for the EUT as shown and described in **Figures 501-2** through to **501-6** and **Clause 4.3.8**. The test setup shall be as follows:

a. Calibration: Configure the test setup for the signal check path shown in **Figure NRE03-1** or **NRE03-2** as applicable.

b. EUT Testing: Configure the test setup for the measurement path shown in **Figure NRE03-1** or **NRE03-2** as applicable.

30.3.4 Procedures

The test procedures shall be as follows:

a. The measurements must be performed in the far field of the transmitting frequency. Consequently, the far-field test distance must be calculated prior to performing the test using the relationships below:

R = distance between transmitter antenna and receiver antenna.

D = maximum physical dimension of transmitter antenna.

d = maximum physical dimension of receiver antenna.

λ = wavelength of frequency of the transmitter.

All dimensions are in metres.

For transmitter frequencies less than or equal to 1.24 GHz, the greater distance of the following relationships shall be used:

$R = 2D^2/\lambda$ $\quad$ $R = 3\lambda$

For transmitter frequencies greater than 1.24 GHz, the separation distance shall be calculated as follows:

For $2.5\ D < d$ use $R = 2D^2/\lambda$

For $2.5\ D \geq d$ use $R = (D+d)^2/\lambda$

b. Turn on the measurement equipment and allow sufficient time for stabilisation.

c. Calibration

(1) Apply a known calibrated signal level from the signal generator through the system check path at a midband fundamental frequency (f_o).

2) Scan the measurement receiver in the same manner as a normal data scan. Verify the measurement receiver detects a level within ±3 dB of the expected signal.

(3) If readings are obtained which deviate by more than ±3 dB, locate the source of the error and correct the deficiency prior to proceeding with the test.

(4) Repeat **3.4c(1)** through **3.4c(3)** for two other frequencies over the frequency range of test.

d. EUT Testing

(1) Turn on the EUT and allow a sufficient time for stabilisation.

(2) Tune the EUT to the desired test frequency and use the measurement path to complete the rest of this procedure.

(3) Tune the test equipment to the measurement frequency (f_o) of the EUT and adjust for maximum indication.

(4) For transmitters where a power monitor can be inserted, measure the modulated transmitter power output P, using a power monitor while keying the transmitter. Convert this power level to units of dB relative to 1 watt (dBW). Calculate the Effective Radiated Power (ERP) by adding the EUT antenna gain to this value. Record the resulting level for comparison with that obtained in **3.4d(6)**.

(5) Key the transmitter with desired modulation. Tune the measurement receiver for

maximum output indication at the transmitted frequency. If either or both of the antennas have directivity, align both in elevation and azimuth for maximum indication. Verbal communication between sites via radiotelephone will facilitate this process. Record the resulting maximum receiver meter reading and the measurement receiver bandwidth.

(6) Calculate the transmitter ERP in dBW, based on the receiver meter reading V, using the following equation:

$$ERP = V + 20 \log R + AF - 135$$

Where:

V = reading on the measurement receiver in dBμV

R = distance between transmitter and receiver antennas in meters

AF = antenna factor of receiver antenna in dB (1/m)

Compare this calculated level to the measured level recorded in **3.4d(4**). The compared results should agree within ±3 dB. If the difference exceeds ±3 dB, check the test setup for errors in measurement distance, amplitude calibration, power monitoring of the transmitter, frequency tuning or drift and antenna boresight alignment. Assuming that the results are within the ±3 dB tolerance, the ERP becomes the reference for which amplitudes of spurious and harmonics will be compared to determine compliance with standard limits.

(7) With the rejection network filter connected and tuned to f_o, scan the measurement receiver over the frequency range of test to locate spurious and harmonic transmitted outputs. It may be necessary to move the measuring system antenna in elevation and azimuth at each spurious and harmonic output to assure maximum levels are recorded. Maintain the same measurement receiver bandwidth used to measure the fundamental frequency in **3.4d(5)**.

(8) Verify that spurious outputs are from the EUT and not spurious responses of the measurement system or the test site ambient.

(9) Calculate the ERP of each spurious output. Include all correction factors for cable loss, amplifier gains, filter loss, and attenuator factors.

(10) Repeat **3.4d(2)** through **3.4d(9)** for other f_o of the EUT.

30.3.5 Data Presentation

Data presentation shall be as follows:

a. Provide tabular data showing fundamental frequency (f_o) and frequency of all harmonics and spurious emissions measured, the measured power monitor level and the calculated ERP of the fundamental frequency, the ERP of all spurious and harmonics emissions measured, dB down levels, and all correction factors including cable loss, attenuator pads, amplifier gains, insertion loss of rejection networks and antenna gains.

b. The relative dB down level is determined by subtracting the level in **Clause 30.3.4d(6)** from that recorded in **Clause 30.3.4d(9)**.

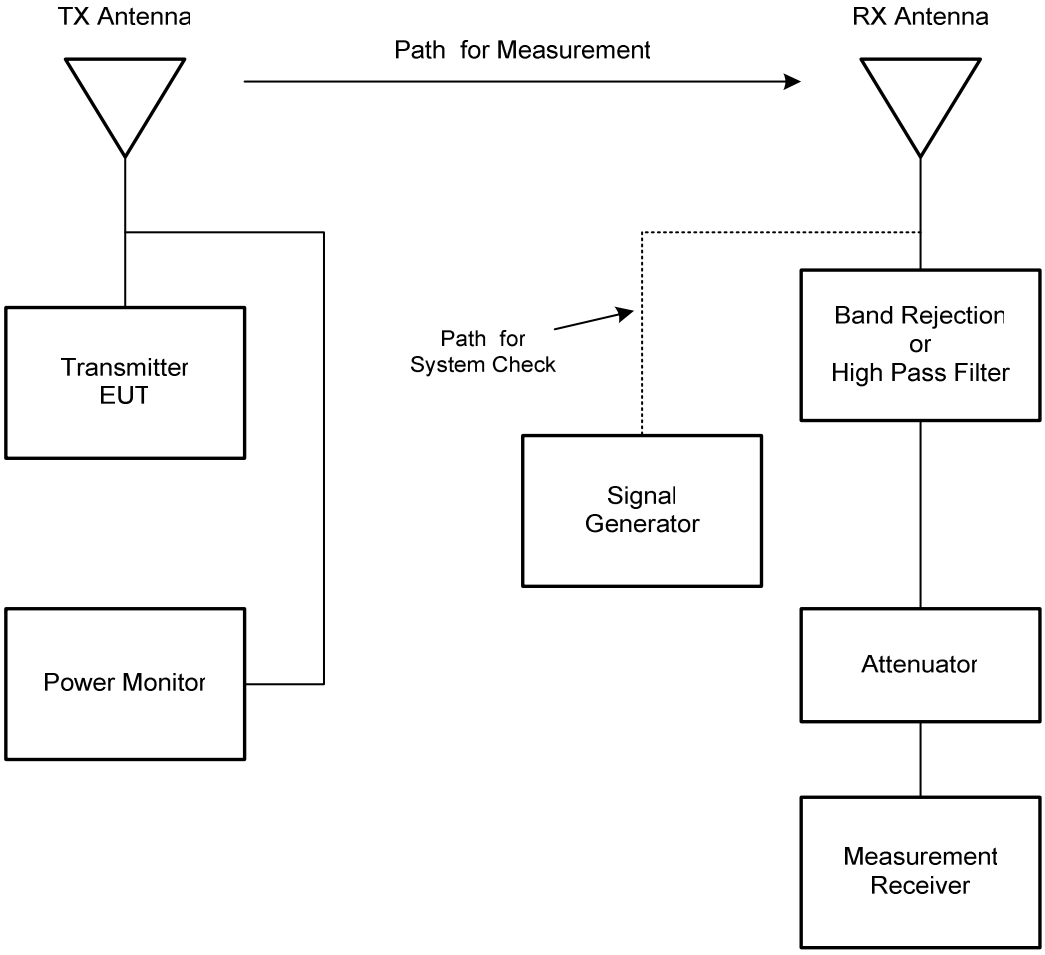

Figure NRE03-1
Calibration and Test Setup for Radiated Harmonics and Spurious Emissions, 10 kHz to 1 GHz

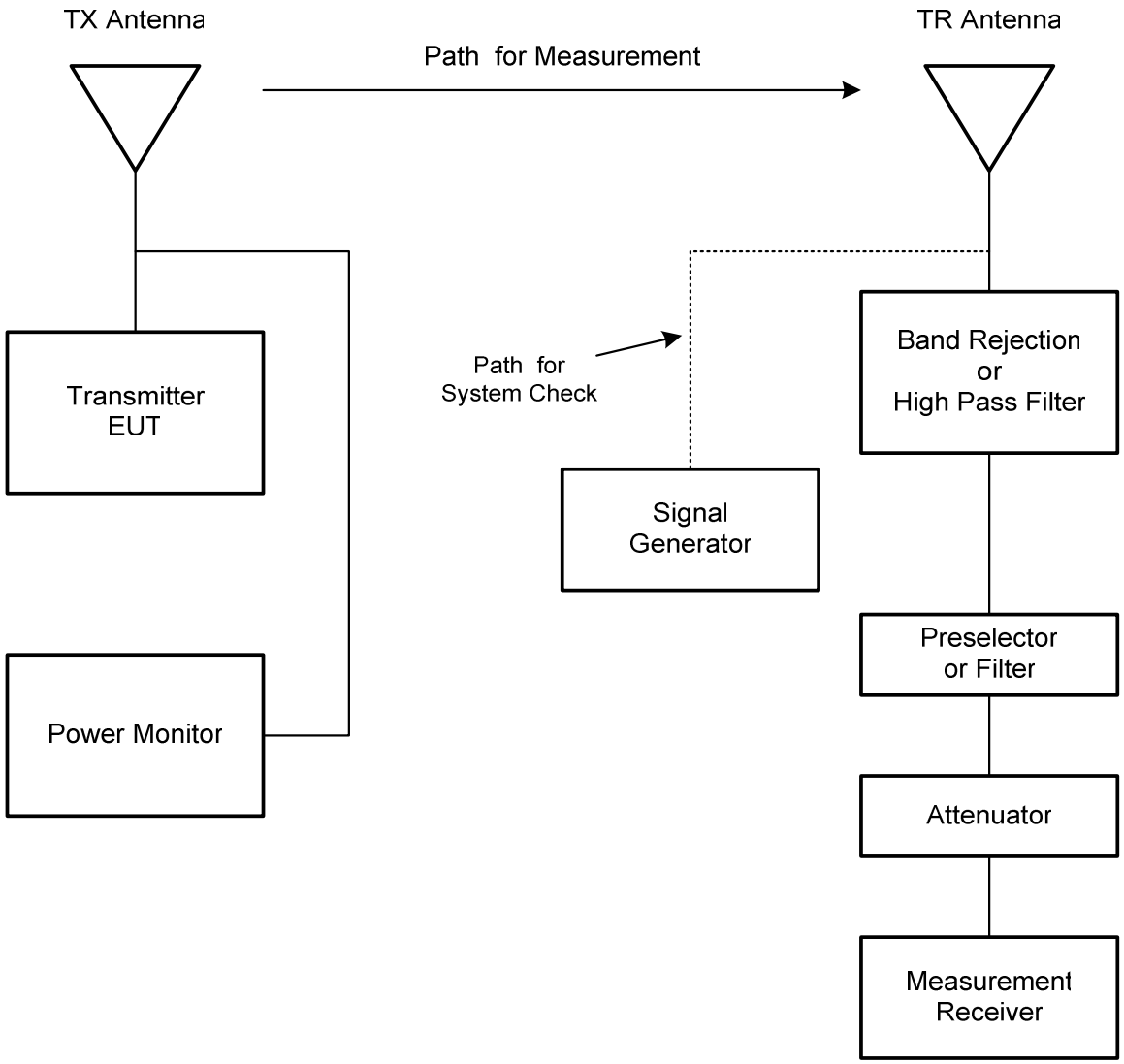

Figure NRE03-2
Calibration and Test Setup for Radiated Harmonics and Spurious Emissions, 1 GHz to 40 GHz

31 NRS01 RADIATED SUSCEPTIBILITY, MAGNETIC FIELD, 30 Hz to 100 kHz

31.1 NRS01 Applicability

This requirement is applicable to equipment and subsystem enclosures, including electrical cable interfaces. The requirement is not applicable for electromagnetic coupling via antennas. The requirement is applicable for equipment intended to be installed on Aircraft, Army ground equipment and all equipment deployed on Ships. For submarines, this requirement is applicable only to equipment and subsystems that have an operating frequency of 100 kHz or less and an operating sensitivity of 1 µV or better (such as 0.5 µV). For an, EUT comprising a number of units, each unit with potentially sensitive components shall be tested individually. The interconnecting cables do not have to be subjected to this test. Reference should also be made to **Clause 6.25**.

31.2 NRS01 Limit

The EUT shall not exhibit any malfunction, degradation of performance, or deviation from specified indications, beyond the tolerances indicated in the individual equipment or subsystem specification, when subjected to the magnetic fields shown in **Figures NRS101-1** and **NRS101-2**.

31.3 NRS01 Test Procedures

31.3.1 Purpose

This test procedure is used to verify the ability of the EUT to withstand radiated magnetic fields.

31.3.2 Test Equipment

The test equipment shall be as follows:

a. Signal source

b. Radiating loop having the following specifications;

(1)	Diameter:	12 cm
(2)	Number of turns:	20
(3)	Wire:	No. 12 insulated copper
(4)	Magnetic flux density:	9.5×10^7 pT/ampere of applied current at a distance of 5 cm from the plane of the loop.

c. Loop sensor having the following specifications:

(1)	Diameter:	4 cm
(2)	Number of turns:	51
(3)	Wire:	7-41 Litz wire (7 Strand, No. 41 AWG)
(4)	Shielding:	Electrostatic
(5)	Correction Factor:	See manufacturer's data for factors to convert measurement receiver readings to decibels above one picotesla (dBpT).

d. Measurement receiver or narrowband voltmeter

e. Current probe

f. 50 µH LISNs

31.3.3 Setup

The test setup shall be as follows:

a. Maintain a basic test setup for the EUT as shown and described in **Figures 501-3** through to **501-6** and **Clause 4.3.8**.

b. Calibration: Configure the measurement equipment, radiating loop, and loop sensor as shown in **Figure NRS01-3**.

c. EUT Testing: Configure the test as shown in **Figure NRS01-4**.

31.3.4 Procedures

The test procedures shall be as follows:

a. Turn on the measurement equipment and allow sufficient time for stabilisation.

b. Calibration

(1) Set the signal source to a frequency of 1 kHz and adjust the output to provide a magnetic flux density of 110 dBpT as determined by the reading obtained on measurement receiver A and the relationship given in **31.3.2b(4)**.

(2) Measure the voltage output from the loop sensor using measurement receiver B.

(3) Verify that the output on measurement receiver B is within ±3 dB of the expected value based on the antenna factor and record this value.

c EUT Testing

(1) Turn on the EUT and allow sufficient time for stabilisation.

(2) Select test frequencies as follows:

(a) Locate the loop sensor 5 cm from the EUT face or electrical interface connector being probed. Orient the plane of the loop sensor parallel to the EUT faces and parallel to the axis of connectors.

(b) Supply the loop with sufficient current to produce magnetic field strengths at least 10 dB greater than the applicable limit but not to exceed 15 amps (183 dBpT).

(c) Scan the applicable frequency range. Scan rates up to 3 times faster than the rates specified in **Table 501-4** are acceptable.

(d) If susceptibility is noted, select no less than three test frequencies per octave at those frequencies where the maximum indications of susceptibility are present.

(e) Reposition the loop successively to a location in each 30 by 30 cm area on each face of the EUT and at each electrical interface connector, and repeat **31.3.4c(2)(c)** and **31.3.4c(2)(d)** to determine locations and frequencies of susceptibility.

(f) From the total frequency data where susceptibility was noted in **31.3.4c(2)(c)** through **31.3.4c(2)(e)**, select 3 frequencies per octave over the applicable frequency range.

(3) At each frequency determined in **31.3.4c(2)(f)**, apply a current to the radiating loop that corresponds to the applicable limit. Move the loop to search for possible locations of susceptibility with particular attention given to the locations determined in **31.3.4c(2)(e)** while maintaining the loop 5 cm from the EUT surface or connector. Verify that susceptibility is not present.

31.3.5 Data Presentation

Data presentation shall be as follows:

a. Provide tabular data showing verification of the calibration of the radiating loop in **Clause 31.3.4b**.

b. Provide tabular data, diagrams, or photographs showing the applicable test frequencies and locations determined in **Clauses 31.3.4c(2)(e)** and **31.3.4c(2)(f).**

c. Provide graphical or tabular data showing frequencies and threshold levels of susceptibility.

31.4 NRS01 alternative test procedures – AC Helmholtz coil

This test procedure may be substituted for the procedures described in **Clause 31.3**, provided that the EUT size versus coil size constraints of **Clause 31.4.3b** can be satisfied.

31.4.1 Purpose

This test procedure is an alternative technique used to verify the ability of the EUT to withstand radiated magnetic fields.

31.4.2 Test Equipment

The test equipment shall be as follows:

a Signal source

b Series-wound AC Helmholtz coil

c Loop sensor having the following specifications (same as NRE01 loop):

(1) Diameter: 13.3 cm

(2) Number of turns: 36

(3) Wire: 7-41 Litz wire (7 strand, No. 41 AWG)

(4) Shielding: Electrostatic

(5) Correction factor See manufacturer's data for factors to convert measurement receiver readings to decibels above one picotesla (dBpT).

Note: It is permissible to use loop sensors having different characteristics to those above with the provision that any loop used has dimensions smaller than 1.1 x the coil radius and has correction factors traceable to national standards.

d. Measurement receiver or narrowband voltmeter

e. Current probe

f. LISNs

31.4.3 Setup

The test setup shall be as follows:

a. Maintain a basic test setup for the EUT as shown and described in **Figures 501-3** through to **501-6** and **Clause 4.3.8**.

b. Calibration

(1) Configure the radiating system as shown in **Figure NRS01-5**. Select coil spacing based on the physical dimensions of the EUT enclosure.

(2) For an, EUT with dimensions less than one coil radius, use a standard Helmholtz configuration (coils separated by one coil radius). Place the field-monitoring loop in the centre of the test volume.

(3) For an, EUT with dimensions greater than one coil radius, use the optional configuration. Select a coil separation such that the plane of the EUT face is at

least 5 cm from the plane of the coils and such that the separation between the coils does not exceed 1.5 radii. Place the field-monitoring probe in the plane of either coil at its centre.

c. EUT Testing

(1) Configure the test as shown in **Figure NRS01-6**, using the same coil spacing arrangement as determined for calibration under **31.4.3b**.

(2) Position the coils such that the plane of the EUT faces is in parallel with the plane of the coils.

31.4.4 Procedures

The test procedures shall be as follows:

a. Turn on the measurement equipment and allow sufficient time for stabilisation.

b. Calibration

(1) Set the signal source to a frequency of 1 kHz and adjust the output current to generate a magnetic flux density of 110 dBpT as determined by the reading obtained on measurement receiver A.

(2) Measure the voltage output from the loop sensor using measurement receiver B.

(3) Verify that the output on measurement receiver B is within ±3 dB of the expected value based on the antenna factor and record this value.

c. EUT Testing

(1) Turn on the EUT and allow sufficient time for stabilisation.

(2) Select test frequencies as follows:

(a) Supply the Helmholtz coil with sufficient current to produce magnetic field strengths at least 6 dB greater than the applicable limit.

(b) Scan the applicable frequency range. Scan rates up to 3 times faster than the rates specified in **Table 501-4** are acceptable.

(c) If susceptibility is noted, select no less than three test frequencies per octave at those frequencies where the maximum indications of susceptibility are present.

(d) Reposition the Helmholtz coils successively over all areas on each face of the EUT (in all three axes), including exposure of any electrical interface connectors, and repeat **31.4.4c(2)(b**) and **31.4.4c(2)(c)** to determine locations and frequencies of susceptibility.

(e) From the total frequency data where susceptibility was noted in **31.4.4c(2)(b)** through **31.4.4c(2)(d)**, select three frequencies per octave over the applicable frequency range.

(3) At each frequency determined in **31.4.4c(2)(e)**, apply a current to the Helmholtz coil that corresponds to the applicable NRS01 limit. Move the coils to search for possible locations of susceptibility with particular attention given to the locations determined in **31.4.4c(2)(d)**. Ensure the EUT remains centred between the coils, or the coils remain 5 cm from the EUT surface, as applicable. Verify that susceptibility is not present.

31.4.5 Data Presentation

Data presentation shall be as follows:

a. Provide tabular data showing verification of the calibration of the Helmholtz coils in **Clause 31.4.4b**.

b. Provide tabular data, diagrams, or photographs showing the applicable test frequencies and locations determined in **Clauses 31.4.4c(2)(d)** and **31.4.4c(2)(e)**.

c. Provide graphical or tabular data showing frequencies and threshold levels of susceptibility.

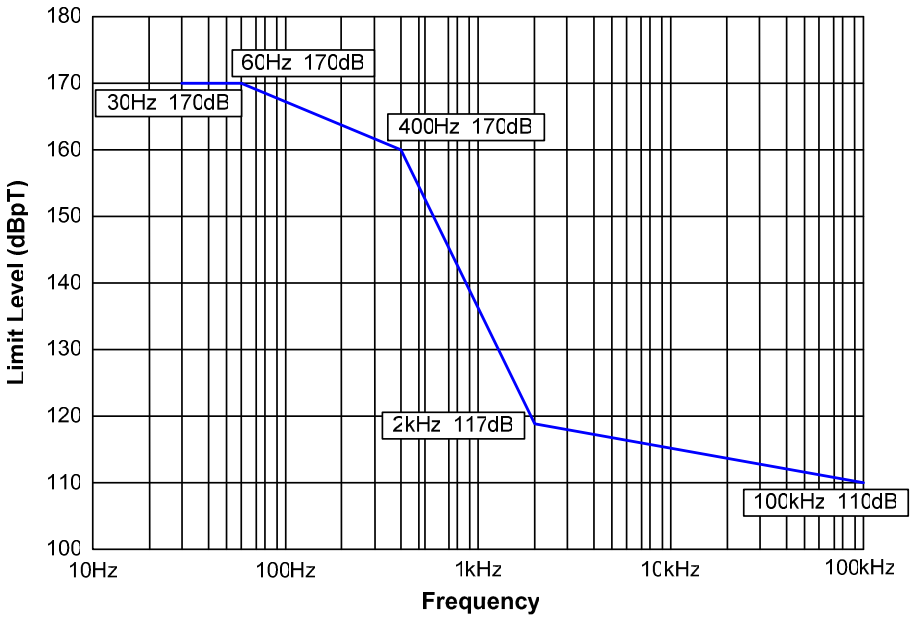

Figure NRS01-1 Limit for all Air and Sea Applications

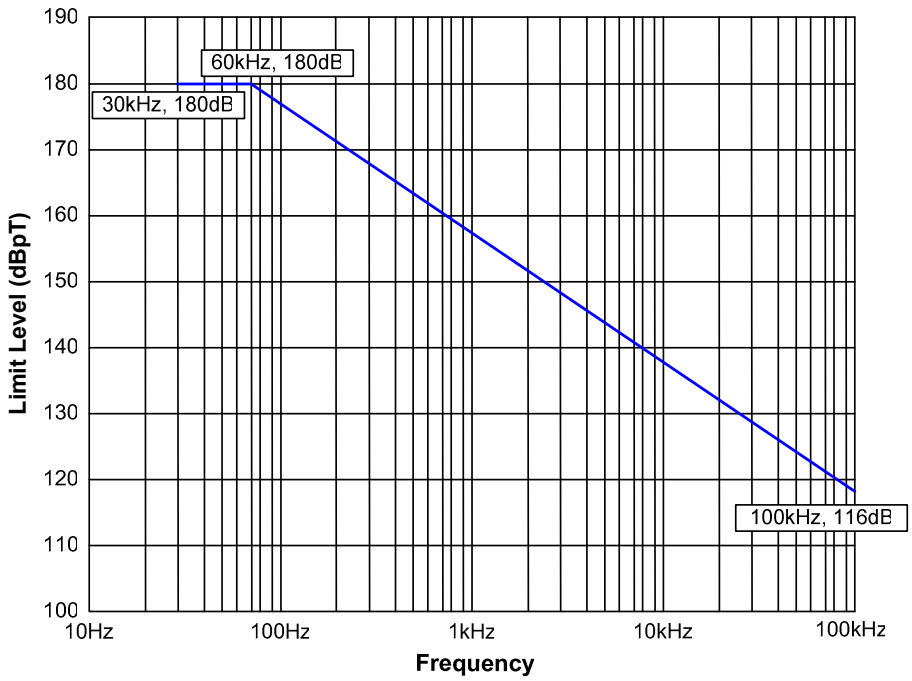

Figure NRS01-2 Limit for all Land Applications

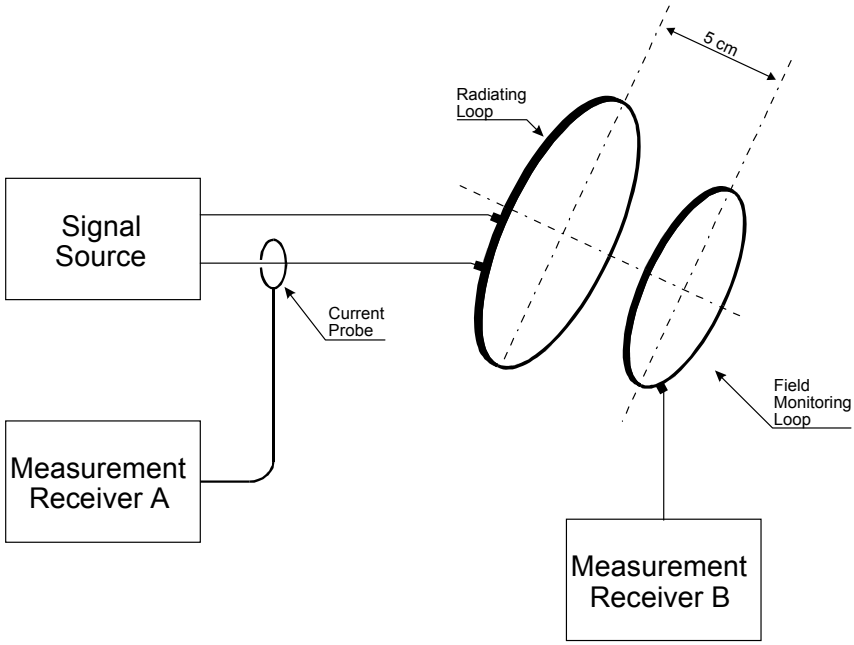

Figure NRS01-3 Calibration of the Radiating System

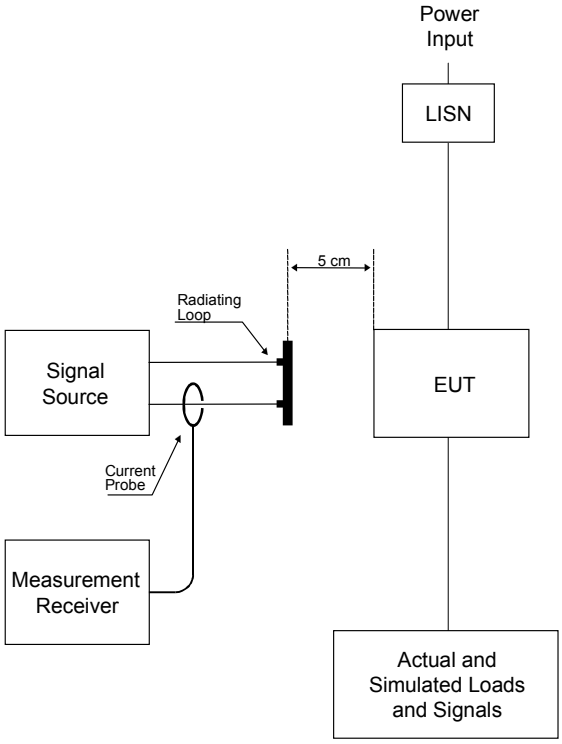

Figure NRS01-4 Basic Test Setup

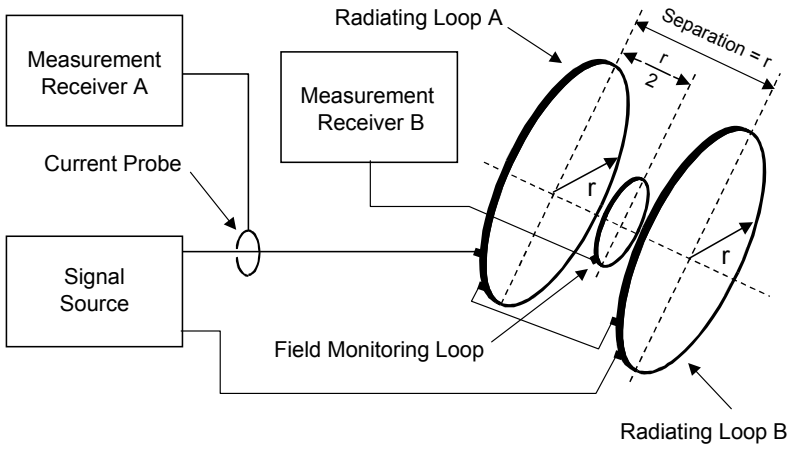

Standard Configuration

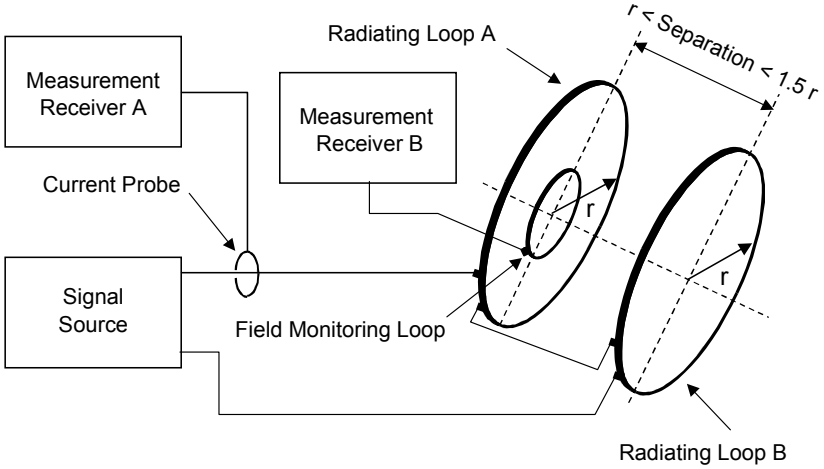

Optional Configuration

Figure NRS01-5 Calibration of Helmholtz Coils

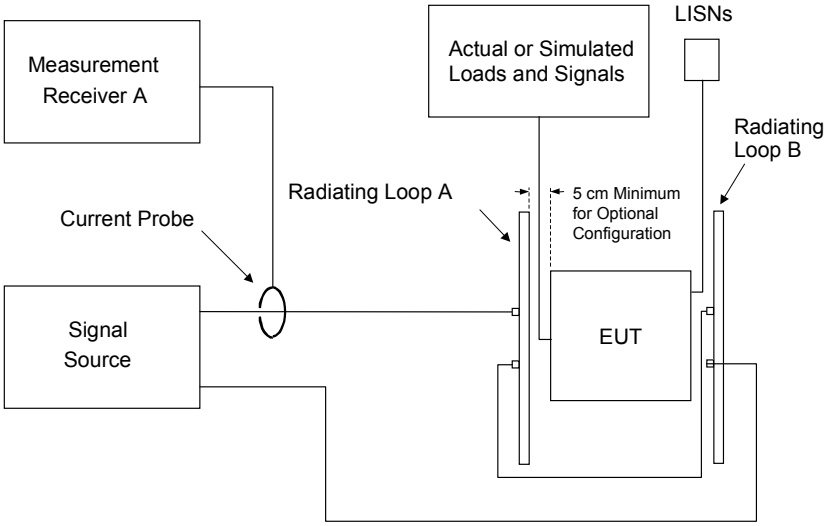

Note: One axis position of three required is shown

Figure NRS01-6 Test Setup for Helmholtz Coils

32 NRS02 RADIATED SUSCEPTIBILITY, ELECTRIC FIELD, 50 kHz to 40 GHz

32.1 NRS02 Applicability

This requirement is applicable to equipment and subsystem enclosures and all interconnecting cables. The requirement is for testing from 50 kHz to 1 GHz for all applications with an option to test above 1 GHz at the procurement authority's discretion. Testing shall not exceed 40 GHz.

There is no requirement at the tuned frequency of antenna-connected receivers except for surface ships and submarines.

Reference should also be made to **Clause 6.26**.

This test shall also apply to safety critical and safety related equipment containing circuits which may exhibit a 'window effect' response as identified in the EMITP.

Note 1 The start frequency for this test maybe tailored by Nations as required.

Note 2 Window effect testing will normally be conducted following testing performed at the requirement test. See **Clause 4.3.10.4.1**.

32.2 NRS02 Limit

The EUT shall not exhibit any malfunction, degradation of performance, or deviation from specified indications, beyond the tolerances indicated in the individual equipment or subsystem specification, when subjected to the radiated electric fields listed in **Table NRS02-1** and modulated as specified below. Up to 30 MHz, the requirement shall be met for vertically polarised fields. Above 30 MHz, the requirement shall be met for both horizontally and vertically polarised fields. Circular polarised fields are not acceptable.

32.3 NRS02 Test Procedures

32.3.1 Purpose

This test procedure is used to verify the ability of the EUT and associated cabling to withstand electric fields.

32.3.2 Test Equipment

The test equipment shall be as follows:

a. Signal generators

b. Power amplifiers

c. Receive antennas

   1. 1 GHz to 10 GHz Double Ridge Horns

   2. 10 GHz to 40 GHz other antennas as approved by the procuring authority

d. Transmit antennas

e. Electric field sensors (physically small - electrically short)

f. Measurement receiver

g. Power meter

h. Directional coupler

i. Attenuator

j. Data recording device

k. 50 µH LISNs

32.3.3 Setup

The test setup shall be as follows:

a. Maintain a basic test setup for the EUT as shown and described in **Figures 501-2** through to **501-6** and **Clause 4.3.8**.

b. For electric field calibration, electric field sensors are required from 50 kHz to 1 GHz, either field sensors or receive antennas may be used above 1 GHz (see **32.3.2c** and **32.3.2e**).

c. Configure test equipment as shown in **Figure NRS02-1**.

d. Calibration

(1) Placement of electric field sensors (see **32.3.3b**). Position sensors at same distance as the EUT is located from the transmit antenna, directly opposite, the transmit antenna as shown in **Figures NRS02-2** and **NRS02-3** and a minimum of 30 cm above the ground plane at or below 1GHz. Above 1 GHz, place the sensors at height corresponding to the area of the EUT being illuminated. Do not place sensors directly at corners or edges of EUT components.

(2) Placement of receive antennas (see **32.3.3b**). Prior to placement of the EUT, position the receive antenna, as shown in **Figure NRS02-4**, on a dielectric stand at the position and height above the ground plane where the centre of the EUT will be located.

e. EUT Testing

(1) Placement of transmit antennas. Antennas shall be placed 1 metre or greater from the test setup boundary as follows:

(a) 50 kHz to 200 MHz

(1) Test setup boundaries ≤ 3 metres. Centre the antenna between the edges of the test setup boundary. The boundary includes all enclosures of the EUT and the 2 metres of exposed interconnecting and power leads required in **Clause 4.3.8.6**. Interconnecting leads shorter than 2 metres are acceptable when they represent the actual platform installation.

(2) Test setup boundaries > 3 metres. Use multiple antenna positions (N) at spacings as shown in **Figure NRS02-3**. The number of antenna positions (N) shall be determined by dividing the edge-to-edge boundary distance (in metres) by 3 and rounding up to an integer.

(b) 200 MHz and above: Multiple antenna positions may be required as shown in **Figure NRS02-2**. Determine the number of antenna positions (N) as follows:

(1) For testing from 200 MHz up to 1 GHz, place the antenna in a sufficient number of positions such that the entire width of each EUT enclosure and the first 35 cm of cables and leads interfacing with the EUT enclosure are within the 3 dB beamwidth of the antenna.

(2) For testing at 1 GHz and above, place the antenna in a sufficient number of positions such that the entire width of each EUT enclosure and the first

7 cm of cables and leads interfacing with the EUT enclosure are within the 3 dB beamwidth of the antenna.

(2) Maintain the placement of electric field sensors as specified in **32.3.3d(1)**.

32.3.4 Procedures

The test procedures shall be as follows:

a. Turn on the measurement equipment and EUT and allow a sufficient time for stabilisation.

b. Assess the test area for potential RF hazards and take necessary precautionary steps to assure safety of test personnel.

c. Calibration

(1) Electric field sensor procedure. Record the amplitude shown on the electric field sensor display unit due to EUT ambient. Reposition the sensor, as necessary, until this level is < 10% of the applicable field strength to be used for testing.

(2) Receive antenna procedure (> 1 GHz)

(a) Connect a signal generator to the coaxial cable at the receive antenna connection point (antenna removed). Set the signal source to an output level of 0 dBm at the highest frequency to be used in the present test setup. Tune the measurement receiver to the frequency of the signal source.

(b) Verify that the output indication is within ±3 dB of the applied signal, considering all appropriate losses. If larger deviations are found, locate the source of the error and correct the deficiency before proceeding.

(c) Connect the receive antenna to the coaxial cable as shown in **Figure NRS02-4**. Set the signal source to 1 kHz pulse modulation, 50% duty cycle. Using an appropriate transmit antenna and amplifier establish an electric field at the test start frequency. Gradually increase the electric field level until it reaches the applicable limit.

(d) Scan the test frequency range and record the required input power levels to the transmit antenna to maintain the required field.

(e) Repeat procedures **32.3.4.c (2)(a)** through **32.3.4(2)(d)** whenever the test setup is modified or an antenna is changed.

d. EUT Testing

(1) E-Field Sensor Procedure

(a) Set the signal source to 1 kHz pulse modulation, 50% duty cycle, and using appropriate amplifier and transmit antenna, establish an electric field at the test start frequency. Gradually increase the electric field level until it reaches the applicable limit.

(b) Scan the required frequency ranges in accordance with the rates and duration's specified in **Table 501-4**. Maintain field strength levels in accordance with the applicable limit. Monitor EUT performance for susceptibility effects.

(c) Ensure that the E-Field sensor is indicating the field from the fundamental frequency and not from the harmonics.

(2) Receive Antenna Procedure

(a) Remove the receive antenna and reposition the EUT in conformance with **32.3.3a**.

(b) Set the signal source to 1 kHz pulse modulation, 50% duty cycle. Using an appropriate amplifier and transmit antenna, establish an electric field at the test start frequency. Gradually increase the input power level until it corresponds to the applicable level recorded during the calibration routine.

(c) Scan the required frequency range in accordance with the rates and duration's specified in **Table 501-4** while assuring the correct transmitter input power is adjusted in accordance with the calibration data collected. Constantly monitor the EUT for susceptibility conditions.

(3) If susceptibility is noted, determine the threshold level in accordance with **Clause 4.3.10.4.3** and verify that it is above the limit.

(4) Perform testing over the required frequency range with the transmit antenna vertically polarised. Repeat the testing above 30 MHz with the transmit antenna horizontally polarised.

(5) Repeat **32.3.4d** for each transmit antenna position required by **32.3.3e**.

Note: Some NATO members may require additional modulation types applied over some or all of the frequency range tested. The Procuring Authority should be consulted with regard to other required modulations such as a pulse modulation of 1 µS width with a prf of 1kHz used to mimic the effect of co-located radar systems.

32.3.5 Data Presentation

Data presentation shall be as follows:

a. Provide graphical or tabular data showing frequency ranges and field strength levels tested.

b. Provide graphical or tabular data listing (antenna procedure only) all calibration data collected to include input power requirements used versus frequency, and results of system check in **32.3.4c(2)(c)** and **32.3.4c(2)(d)**.

c. Provide the correction factors necessary to adjust sensor output readings for equivalent peak detection of modulated waveforms.

d. Provide graphs or tables listing any susceptibility thresholds that were determined along with their associated frequencies.

e. Provide diagrams or photographs showing actual equipment setup and the associated dimensions.

32.4 NRS02 Alternative Test Procedures – Reverberation Chamber (Mode-Tuned)

These procedures may be substituted for the **Clause 32.1** procedure over the frequency range of 200 MHz to 40 GHz. The lower frequency limit is dependent on chamber size. To determine the lower frequency limit for a given chamber, use the following formula to determine the number of possible modes (N), which can exist at a given frequency. If, for a given frequency, N is less than 100 then the chamber should not be used at or below that frequency.

$$N = \frac{8\pi}{3} a\,b\,d \frac{f^3}{c^3}$$

Where: a, b, and d are the chamber internal dimensions in metres

f is the operation frequency in Hz

c is the speed of propagation (3×10^8 m/s)

32.4.1 Purpose

This test procedure is an alternative technique used to verify the ability of the EUT and associated cabling to withstand electric fields.

32.4.2 Test Equipment

The test equipment shall be as follows:

a. Signal generators

b. Power amplifiers

c. Receive antennas

(1) 200 MHz to 1 GHz, Log Periodic or Double Ridge Horns

(2) 1 GHz to 18 GHz, Double Ridge Horns

(3) 18 GHz to 40 GHz, other antennas as approved by the procuring activity

d. Transmit Antennas

e. Electric field sensors (physically small - electrically short), each axis independently displayed

f. Measurement Receiver

g. Power Meter

h. Directional Coupler

i. Attenuator, 50 ohm

j. Data Recording device

k. LISNs

32.4.3 Setup

The test setup shall be as follows:

a. Install the EUT in a reverberation chamber using the basic test setup for the EUT as shown and described in **Figures 501-3** through **501-6** and **Clause 4.3.8**. The EUT shall be at least 1.0 metre from the chamber walls, the tuner, and antennas.

b. For electric field calibration, electric field sensors (**32.4.2.e**) are required from 200 MHz to 1 GHz, either field sensors or receive antennas may be used above 1 GHz (see **32.4.2c** and **32.4.2e**).

c. Configure the test equipment as shown in **Figures NRS02-5** and **NRS02-6**. The same configuration is used for both calibration and EUT testing. Both the, transmit and receive antennas shall be present in the chamber for all calibration and EUT testing, including for the electric-field probe technique. Unused receive antennas shall be terminated in 50 ohms.

32.4.4 Procedure

The test procedures shall be as follows:

a. Calibration: Use the following procedure to determine the electric field strength that will be created inside the chamber when a fixed amount of RF energy is injected into the chamber.

(1) Receive Antenna Procedure.

(a) Adjust the RF source to inject an appropriate forward power (unmodulated) into the chamber at the start frequency of the test.

(b) Measure the level at the receive antenna using the measurement receiver.

(c) Rotate the tuner 360 degrees using the minimum number of steps required from **Table NRS02-2**. Allow the paddle wheel to dwell at each position for a period corresponding to a minimum of 1.5 times the response time of the measurement receiver.

(d) Record the maximum amplitude of the signal received and use, the following formula to derive a calibration factor for the field strength created inside the chamber. ($P_{r\text{-}max}$ and $P_{forward}$ in watts; λ in metres).

$$\text{Calibration factor} = \frac{8\pi}{\lambda}\sqrt{5\left(\frac{P_{r-max}}{P_{forward}}\right)} \quad \text{V/m (for one watt)}$$

(e) Repeat the procedure in frequency steps no greater than 2% of the preceding frequency until 1.1 times the start frequency is reached. Continue the procedure in frequency steps no greater than 10% of the preceding frequency, thereafter.

(2) Electric Field Probe Procedure

(a) Adjust the RF source to inject an appropriate forward power ($P_{forward}$) (unmodulated) into the chamber at the start frequency of the test.

(b) Rotate the tuner 360 degrees using the minimum number of steps required from **Table NRS02-2**. Allow the tuner to dwell at each position for a period corresponding to a minimum of 1.5 times the probe response time.

(c) Record the maximum amplitude from the receive antenna ($P_{r\text{-}max}$) and from each element of the probe and use the following formula to derive a calibration factor for the field strength created inside the chamber. (Probe reading in V/m and $P_{forward}$ in watts).

$$\text{Calibration factor} = \sqrt{\left(\frac{E_{x-max} + E_{y-max} + E_{z-max}}{3}\right)^2 \Big/ P_{forward}} \quad \text{V/m (for one watt)}$$

(d) Repeat the procedure in frequency steps no greater than 2% of the preceding frequency until 1.1 times the start frequency is reached. Continue the procedure in frequency steps no greater than 10% of the preceding frequency, thereafter.

b. EUT Testing: The same antennas used for calibration shall be used for EUT testing.

(1) Turn on the measurement equipment and allow a sufficient time for stabilisation.

(2) Set the RF source to the start frequency of the test with 1 kHz pulse modulation, 50 % duty cycle.

(3) Calculate the amount of RF power needed to create the desired field strength by determining the difference (in dB decibel differences are the same for both field strength and power, there is a square law relationship between field strength and power in real numbers) between the desired field strength and the field strength obtained during the calibration. Adjust the chamber peak forward power to this value. Interpolation between calibration points is required.

(4) Adjust the measurement receiver to display the received signal at the receive antenna to verify that an electric field is present.

(5) Rotate the tuner 360 degrees using the minimum of steps shown in

Table NRS02-2. Allow the tuner to dwell at each position for the duration specified in **Table 501-4**. As the tuner rotates, maintain the forward power required to produce field levels at the applicable limit as determined from the calibration.

(6) Scan the required frequency range in accordance with the maximum frequency step sizes and durations specified in **Table 501-4**. Monitor EUT performance for susceptibility effects.

(7) If susceptibility is noted, determine the threshold level in accordance with **Clause 4.3.10.4.3** and verify that it is above the limit.

32.4.5 Data Presentation

Data presentation shall be as follows:

a. Provide graphical or tabular data showing frequency ranges and field strength levels tested.

b. Provide graphical or tabular data listing of all calibration data collected to include input power requirements used versus frequency and results of calibration in **32.4.4a(1)(d)** and **32.4.4.a (2)(c)**.

c. Provide the correction factors necessary to adjust sensor output readings for equivalent peak detection of modulated waveforms.

d. Provide graphs or tables listing any susceptibility thresholds that were determined along with their associated frequencies.

e. Provide diagrams or photographs showing the actual equipment setup and the associated dimensions.

f. Provide the data certifying the baseline performance of the shielded room as a properly functioning reverberation chamber over a defined frequency range.

Table NRSO2-1 Limits

FREQ RANGE	PLATFORM	LIMIT LEVEL (VOLTS/METRE)							
		AIRCRAFT (EXTERNAL OR SAFETY CRITICAL)	AIRCRAFT INTERNAL	ALL SHIPS (ABOVE DECKS) AND SUBMARINES (EXTERNAL)*	SHIPS (METALLIC) (BELOW DECKS)	SHIPS (NON-METALLIC) (BELOW DECKS)	SUBMARINES (INTERNAL)	GROUND	SPACE
50kHz	L	10	10	10	10	10	-	10	-
To	S	10	10	10	10	10	10	10	-
2MHz	A	10	10	10	10	10	-	10	-
2MHz	L	200	200	200	10	50	-	50	20
To	S	200	200	200	10	50	5	10	20
30MHz	A	200	20	--	-	-	-	10	20
30MHz	L	200	200	200	10	10	-	50	20
To	S	200	200	200	10	10	10	10	20
1GHz	A	200	20	-	-	-	-	10	20
1GHz	L	200	200	200	10	10	-	50	20
To	S	200	200	200	10	10	10	50	20
18GHz	A	200	60	-	-	-	-	50	20
18GHz	L	200	200	200	10	10	-	50	20
To	S	200	60	200	10	10	10	50	20
40GHz	A	200	60	-	-	-	-	50	20

KEY L = Land

= Sea

= Air

*For equipment located external to the pressure hull of a submarine but within the superstructure, use SHIP (METALLIC) (BELOW DECKS)

Frequency Range (MHz)	Tuner Positions
200 - 300	50
300 - 400	20
400 - 600	16
Above 600	12

Table NRS02-2 Required Number of Tuner Positions for a Reverberation Chamber

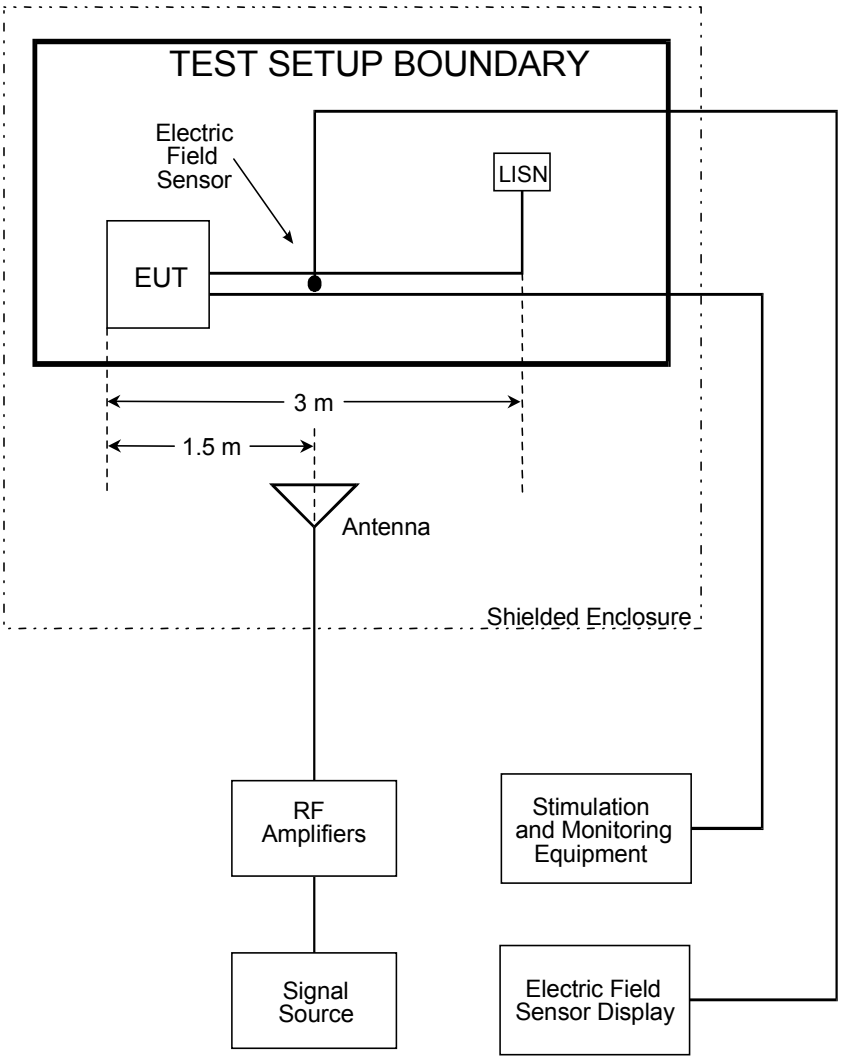

Figure NRS02-1 Test Equipment Configuration

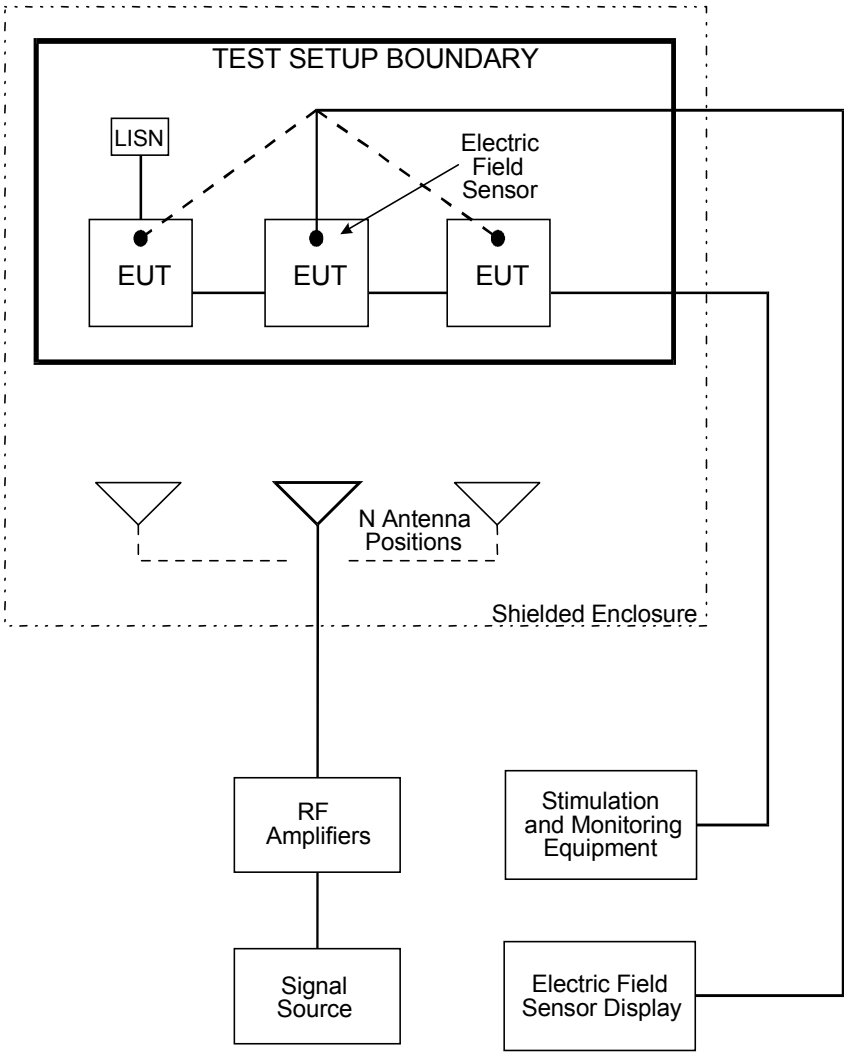

Figure NRS02-2 Multiple Test Antenna Locations for Frequency > 200 MHz

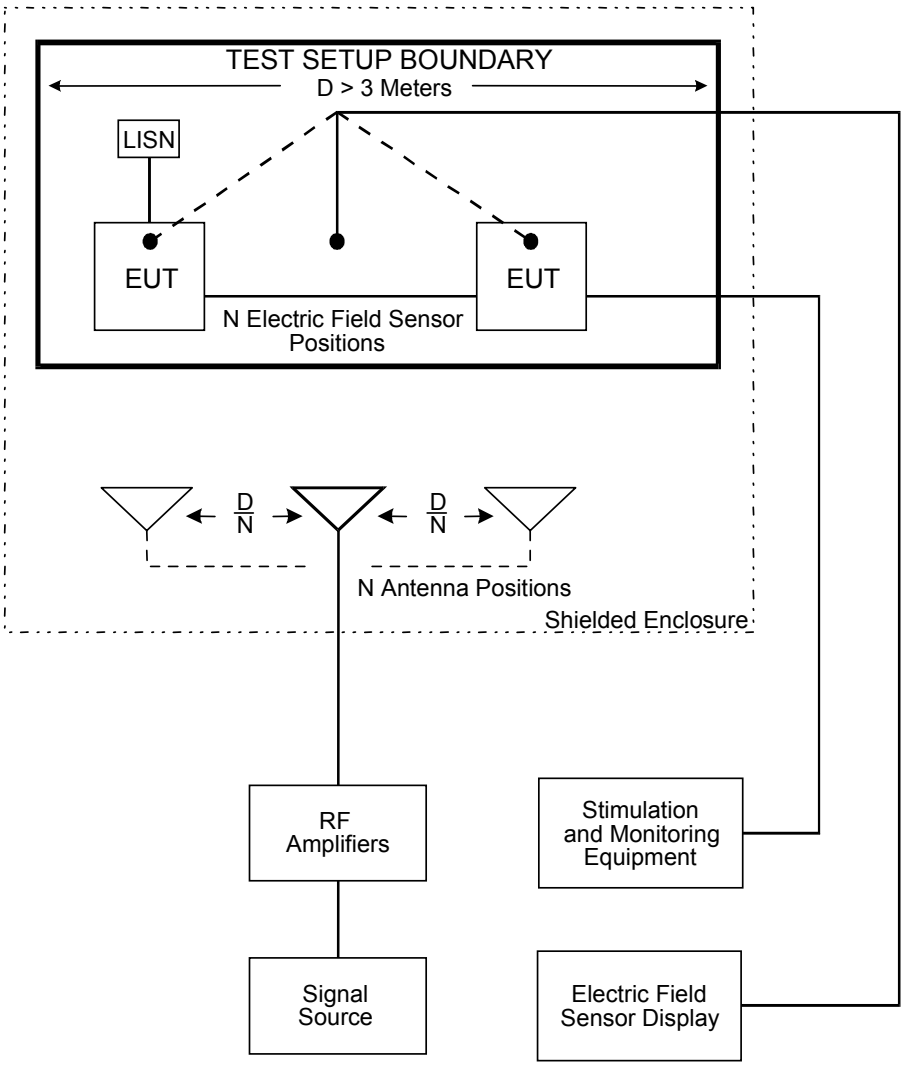

Figure NRS02-3 Multiple Test Antenna Locations for N Positions, D > 3 metres

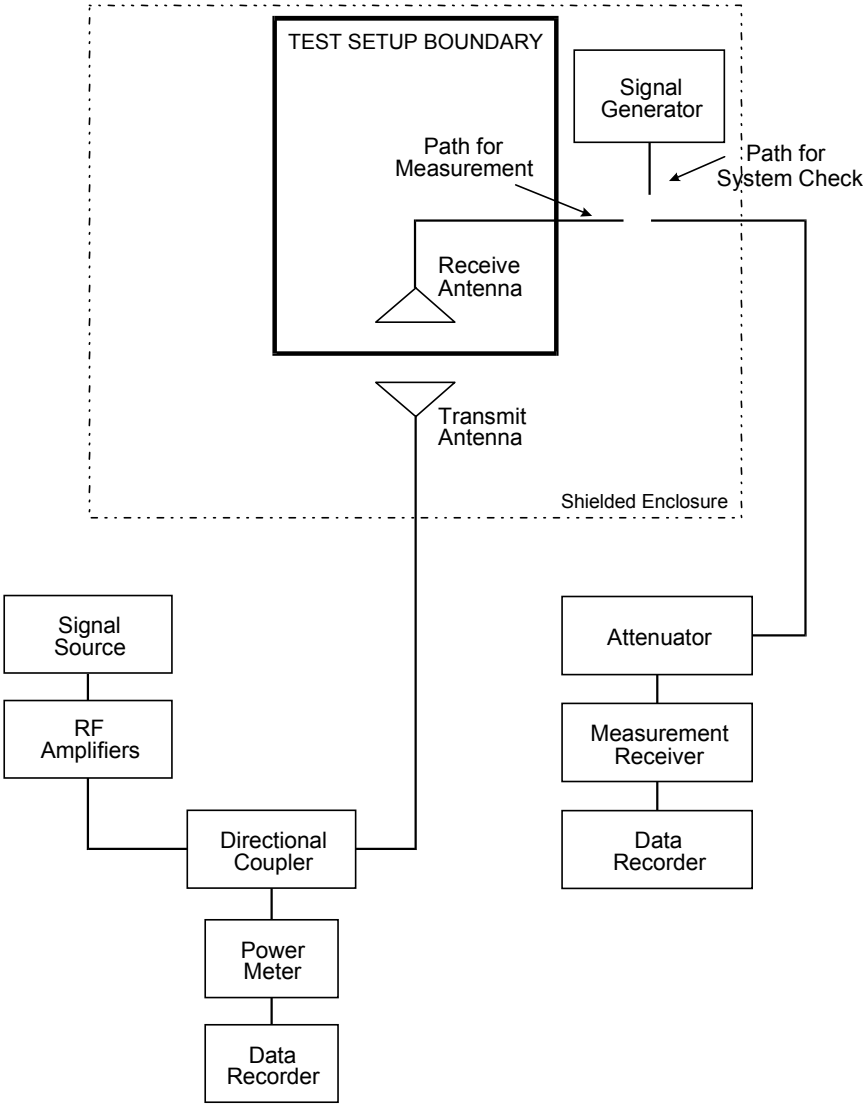

Figure NRS02-4 Receive Antenna Procedure (1 to 40 GHz)

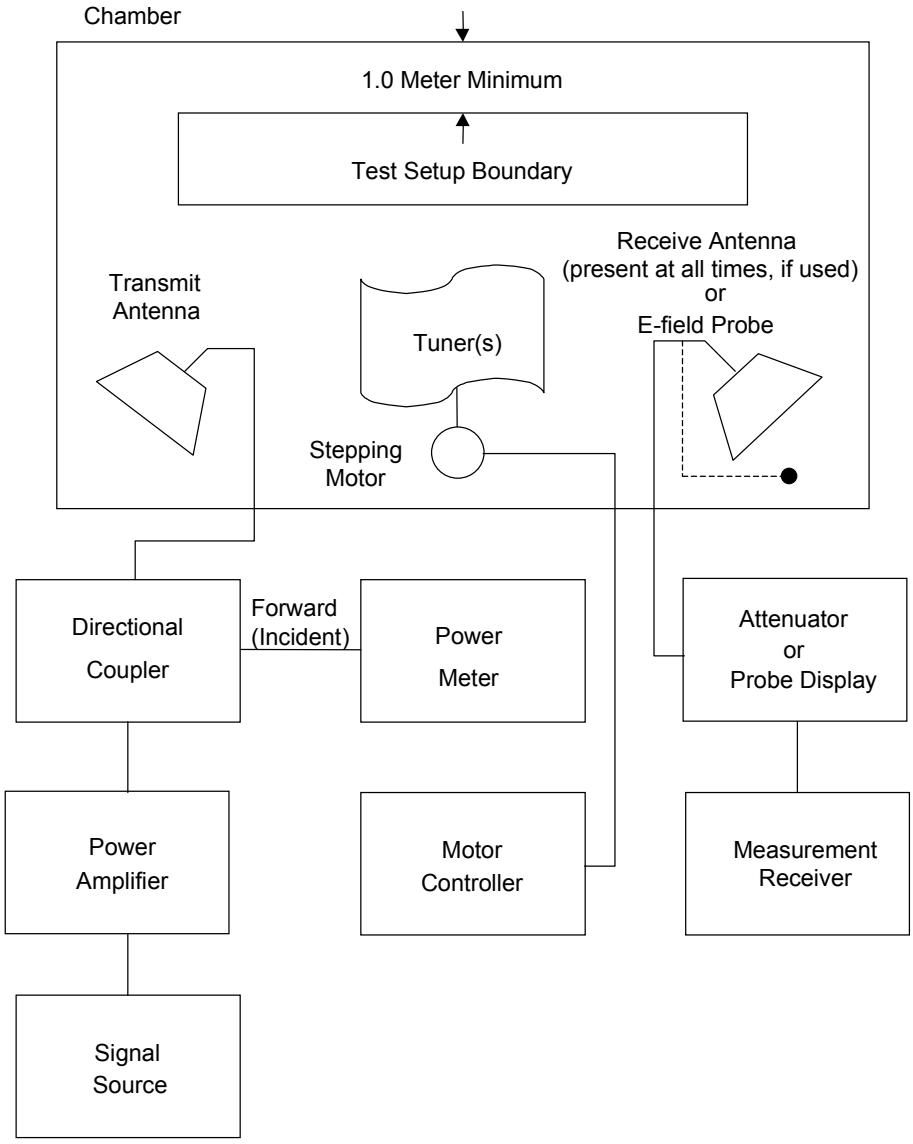

Figure NRS02-5 Reverberation Chamber Setup

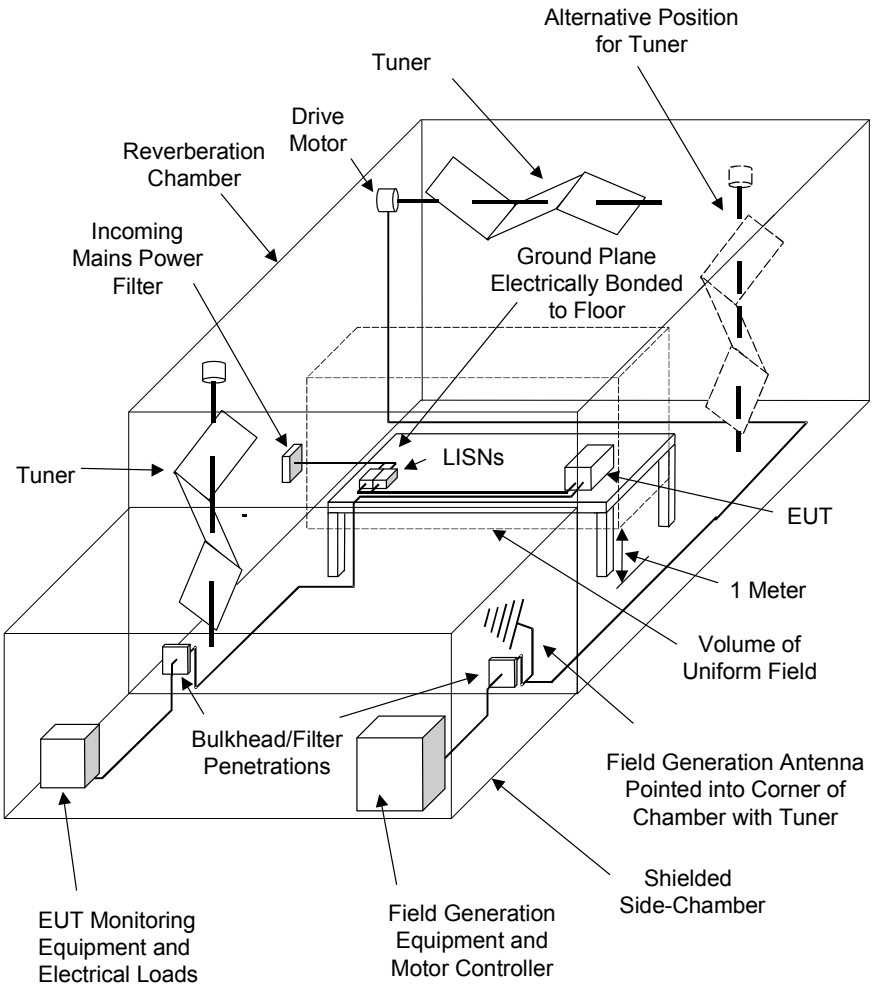

Figure NRS02-6 Reverberation Chamber Overview

33 NRS03 RADIATED SUSCEPTIBILITY, TRANSIENT ELECTROMAGNETIC FIELD

33.1 NRS03 Applicability

This requirement is applicable to equipment and subsystem enclosures when the equipment or subsystem is to be located external to a hardened (shielded) platform or facility. The requirement is applicable for equipment intended solely for use on non-metallic platforms when specified by the procuring activity. The requirement is applicable to Army aircraft for safety critical equipment and subsystems located in an external installation.

This test should only be performed as part of a qualification test program for equipment that is likely to encounter fast transient radiated electric fields as encountered during nuclear electromagnetic pulses.

Reference should also be made to **Clause 6.27**.

33.2 NRS03 Limit

The EUT shall not exhibit any malfunction, degradation of performance, or deviation from specified indications, beyond the tolerances indicated in the individual equipment or subsystem specification, when subjected to a test signal having the waveform and amplitude shown on **Figure NRS03-1**. At least five pulses shall be applied at the rate of not more than one pulse per minute.

33.3 NRS03 Test Procedures

33.3.1 Purpose

This test procedure is used to verify the ability of the EUT enclosure to withstand a transient electromagnetic field.

33.3.2 Test Equipment

The test equipment shall be as follows:

a. Transverse electromagnetic (TEM) cell, parallel plate transmission line or equivalent

b. Transient pulse generator, monopulse output, plus and minus polarity

c. Storage oscilloscope, 500 MHz, single-shot bandwidth (minimum), variable sampling rate up to 1gigasample per second (GSa/s)

d. Terminal protection devices

e. High-voltage probe, 1 GHz bandwidth (minimum)

f. B-dot sensor probe

g. D-dot sensor probe

h. 50 µH LISNs

i. Integrator, time constant ten times the overall pulse width

33.3.3 Setup

Set up the EUT as described below.

CAUTION: Exercise extreme care if an open radiator is used for this test.

a. Calibration: Configure the test equipment in accordance with **Figure NRS03-2**.

(1) Before installing the EUT in the test volume, place the B-dot or D-dot sensor probe in the centre position of the five point grid in the vertical plane where the front face of the EUT will be located (see **Figure NRS03-2**).

(2) Place the high-voltage probe across the input to the radiation system at the output of the transient pulse generator. Connect the probe to a storage oscilloscope.

b. EUT Testing: Configure the test equipment as shown in **Figure NRS03-3**.

(1) Place the EUT centreline on the centreline of the working volume of the radiation system in such a manner that it does not exceed the usable volume of the radiation system (h/3, B/2, A/2)/(x,y,z) as shown in **Figure NRS03-3** (h is the maximum vertical separation of the plates). If the EUT is mounted on a ground plane in the actual installation, the EUT shall be placed on the radiating system ground plane. The EUT shall be bonded to the ground plane in a manner that duplicates the actual installation. Otherwise, the EUT shall be supported by dielectric material that produces a minimum distortion of the EM fields.

(2) The EUT orientation shall be such that the maximum coupling of electric and or magnetic fields is simulated. This may require more than one test orientation.

(3) Cables for EUT operation and monitoring shall be oriented to minimise induced currents and voltages on the cables. Cabling shall be oriented normal to the electric field vector and in a manner that minimises the loop area normal to the magnetic field vector. Cables extending out of the parallel plate working volume should remain normal to the electric field vector for a minimum distance equal to 2 times h.

(4) Bond the bottom plate of the radiation system to an earth reference.

(5) Keep the top plate of the radiation system at least 2 times h from the closest metallic ground, including ceiling, building structural beams, metallic air ducts, shielded room walls, and so forth.

(6) Place the EUT actual or simulated loads and signals for electrical interfaces in a shielded enclosure when an open radiator is used.

(7) Place transient protection devices (TPDs) in the EUT power lines near the power source to protect the power source.

(8) Connect the transient pulse generator to the radiation system.

33.3.4 Procedures

The test procedures shall be as follows:

a. Turn on the measurement equipment and allow a sufficient time for stabilisation.

b. Calibration: Perform the following procedures using the calibration setup:

(1) Generate a pulse and adjust the pulse generator to produce a pulsed field, as measured with the B-dot or D-dot probes, which meets the peak amplitude, rise time, and pulse width requirements. Record the drive pulse waveform as displayed on the oscilloscope

CAUTION: High voltages are used which are potentially lethal.

(2) Tolerances and characteristics of the NRS105 limit shall be as follows:

Rise time (between 10% and 90% points) between 1.8 ns and 2.8 ns (electric field continuously increasing).

Full width half maximum (FWHM) pulse width equal to 23 ns $\pm$ 5 ns.

Peak value of the electric or magnetic field for each grid position:

0 dB $\leq$ magnitude $\leq$ 6 dB above limit.

(3) Repeat steps (1) and (2) above for the other four test points on **Figure NRS03-2**.

(4) Determine the pulse generator settings and associated pulse drive amplitude which simultaneously satisfies the field requirements for all five grid positions.

c. EUT Testing: Perform the following procedures using the test setup:

(1) Turn on the EUT and allow sufficient time for stabilisation.

(2) Test the EUT in its orthogonal orientations whenever possible.

(3) Apply the pulse starting at 10% of the pulse peak amplitude determined in 3.4b(4) with the specified waveshape where practical. Increase the pulse amplitude in step sizes of 2 or 3 until the required level is reached.

(4) Ensure that the drive pulse waveform characteristics at the required test level are consistent with those noted in **33.3.4b(2**).

(5) Apply the required number of pulses at a rate of not more than 1 pulse per minute.

(6) Monitor the EUT during and after each pulse for signs of susceptibility or degradation of performance.

(7) If an, EUT malfunction occurs at a level less than the specified peak level, terminate the test and record the level.

(8) If susceptibility is noted, determine the threshold level in accordance with **Clause 4.3.10.4.3** and verify that it is above the limit.

Note: Wherever practical all cables should remain connected to the EUT during applications of this test to simulate, as near as possible, the normal installation.

33.3.5 Data Presentation

Data presentation shall be as follows:

a. Provide photographs of EUT orientation including cables.

b. Provide a detailed written description of the EUT configuration.

c. Provide oscilloscope recordings that show peak value, rise time, and pulse width of one applied pulse for each EUT orientation.

d. Provide the pulse number, with the first pulse being Number 1, for each recorded waveshape.

e. Record the time-to-recovery for each EUT failure, if applicable.

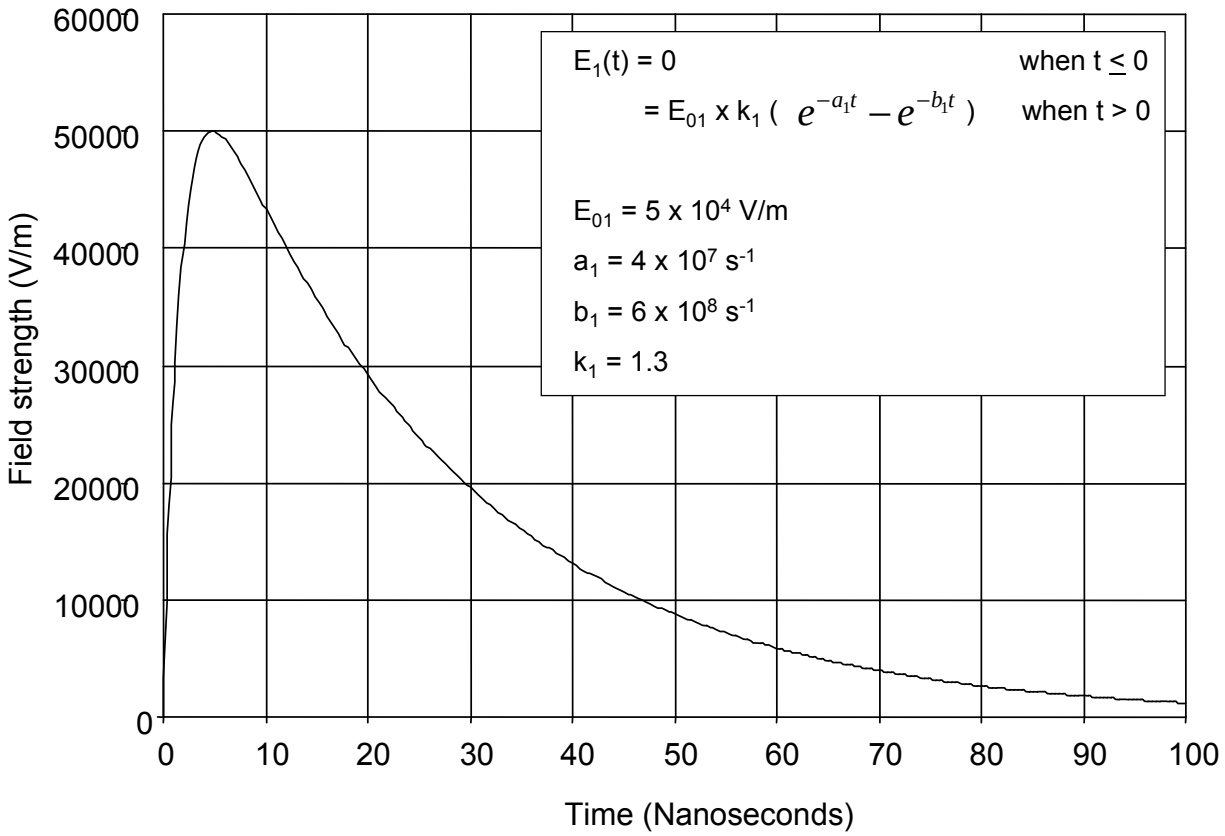

Figure NRS03-1 **Limit for all Applications**

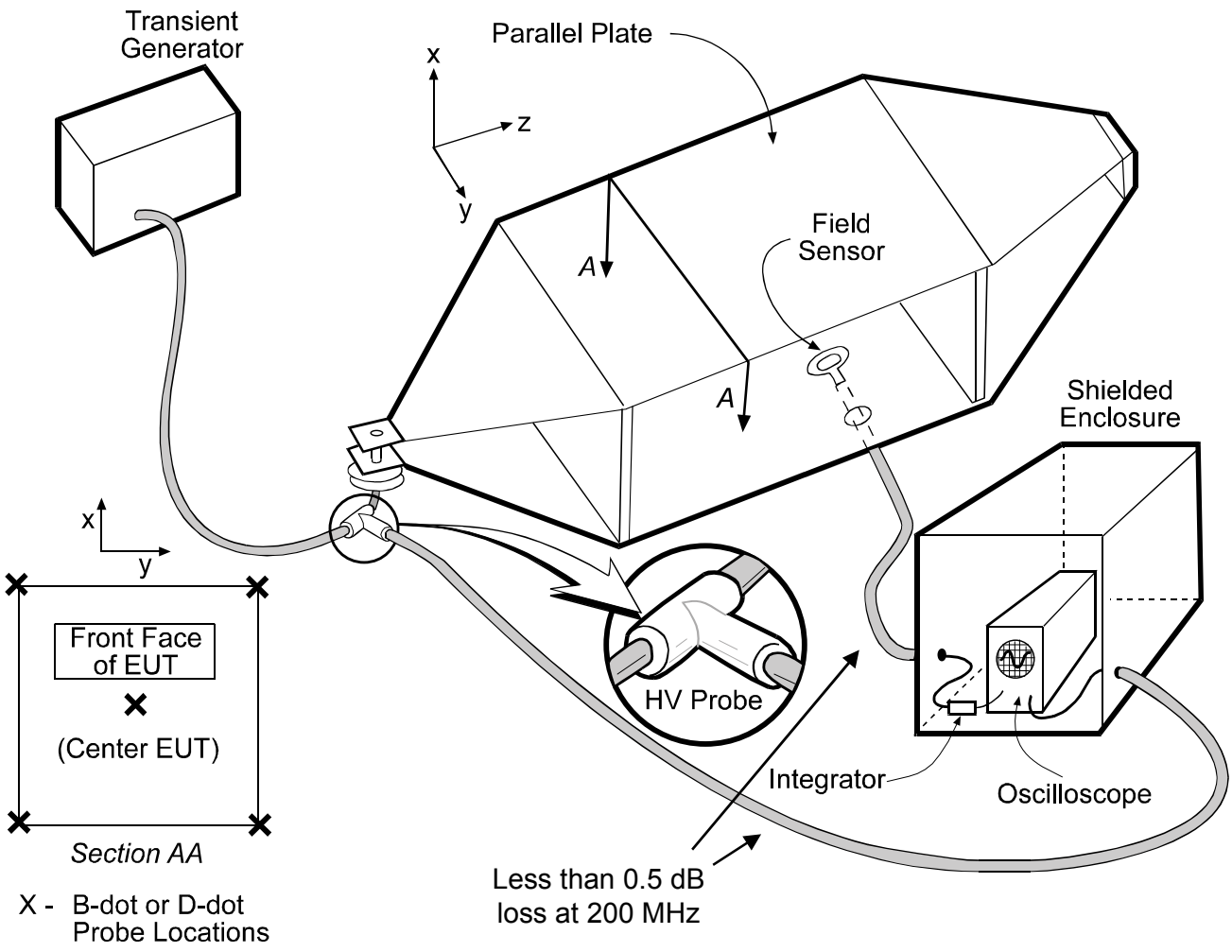

Figure NRS03-2Typical Calibration Setup using Parallel Plate Radiation System

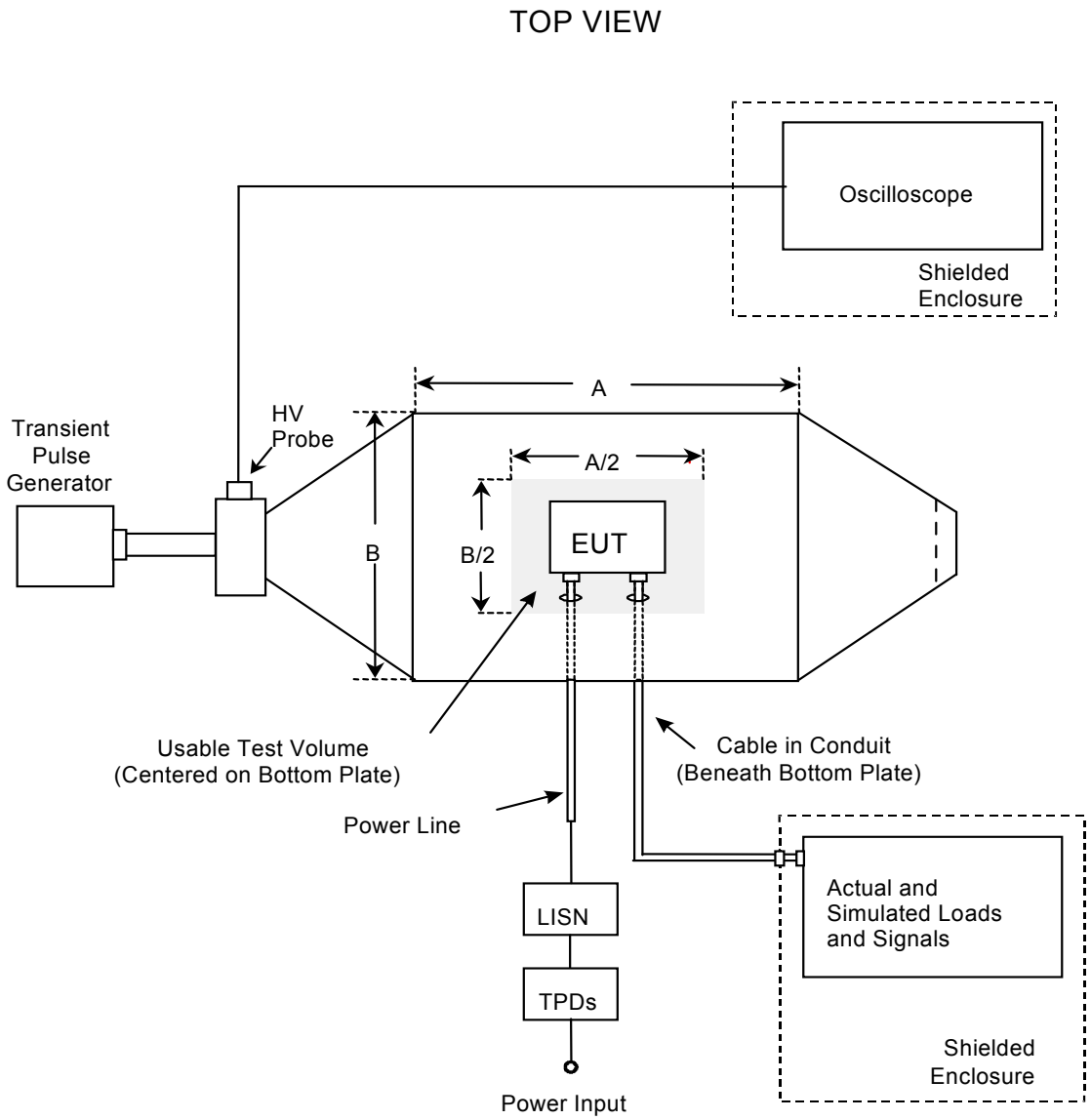

Figure NRS03-3Typical Test Setup using Parallel Plate Radiation System

34 NRS04 RADIATED SUSCEPTIBILITY, MAGNETIC FIELD (DC)

34.1 NRS04 Applicability

The test method shall be primarily applied to equipment deployed aboard ships and submarines, although in some land based installation the procuring authority may require a tailored version of the test to be applied.

This test is applicable to all equipment containing components potentially sensitive to magnetic fields, e.g. cathode ray tubes, photo multipliers, sensitive Hall Effect devices and moving coil meters. For an, EUT comprising a number of units, each unit with potentially sensitive components shall be tested individually. The interconnecting cables do not have to be subjected to this test.

Note: Wherever possible the standard test method shall be applied.

Reference should be made to Requirements **Tables 501-7** and **Clause 6.28** before subjecting the EUT to this test method

34.2 NRS04 Limits

A test level of 800 A/m or higher (up to 4800 A/m for some submarine applications) shall be applied to simulate DC magnetic field effects. The test field shall be ramped continually up and down at a linear rate of 1600A/m/s to the required test level.

34.3 NRS04 Test Procedure

34.3.1 Purpose

The purpose of this test is to confirm that the magnetic field produced by degaussing coils aboard ships and submarines and the effect of deperming does not cause malfunction of the EUT.

34.3.2 Test Equipment

The test equipment shall be as follows:

a. Current Meter

b. Programmable DC Power Supply

c. Helmholtz Coil

d. Oscilloscope

34.3.3 Setup

The test setup shall be as follows:

a. Maintain a basic test setup for the EUT as shown and described in **Figures 501-3** through to **501-6** and **Clause 4.3.8**.

b. Calibration: Configure the test setup for the measurement system check as shown in **Figure NRS04-1**.

c. EUT Testing:

   1. Using the standard test method, position the EUT within the Helmholtz coil as shown in figure NRS04-2.

   2. For larger equipment configurations the localised test method should be utilized and positioned as shown in **Figure NRS04-3**.

34.3.4 Procedure for Standard Test Method

The test procedures shall be as follows:

a. Turn on the measurement equipment and allow a sufficient time for stabilization.

b. Calibration: Evaluate the level of magnetic field being generated within the Helmholtz coil.

   1. Apply a DC current to the Helmholtz coil at the level necessary to produce the required field strength.

   2. Verify the current level, using the current meter and the current waveform using the oscilloscope.

   3. The level of DC current applied to the Helmholtz coil to produce the necessary field strength is dependent upon the constructional properties of the coil itself. The relationship between the coil's dimensions, the current flowing around it and the field strength generated is given by the following equation:

$$\text{Number of turns on each coil} = \frac{\text{Required Field Strength (A/m)} \times \text{Coil Radius (m)}}{0.716 \times \text{Current (Amps)}}$$

c. EUT Testing: Determine if the EUT is susceptible to DC magnetic fields.

   1. Place the EUT within the centre of the Helmholtz coil, turn it on and allow sufficient time for stabilization.

   2. With one of the EUT's axis aligned with the direction that the field will be generated in apply the DC current to the coil. See **Figure NRS04-2** for clarification.

   3. Monitor EUT for degradation or malfunction in performance and record result.

   4. If the EUT exhibits any degradation or malfunction during application of the field reduce the current level until it resumes normal operation, record threshold level.

   5. Change field polarity by reversing connections to the Helmholtz coil and repeat **34.3.4c(3)** and **34.3.4c(4)**.

   6. Repeat **34.3.4c(3)** to **34.3.4c(5)** for each EUT axis.

34.3.5 Procedure for Localised Test Method

a. The Helmholtz coil assembly is replaced by a single closely wound circular coil for the purpose of testing EUT greater than $1m^3$ only.

b. Turn on the measurement equipment and allow a sufficient time for stabilization.

c. Calibration: Evaluate the level of magnetic field being generated within the single coil.

   1. Apply a DC current to the coil at the level necessary to produce the required field strength.

   2. Verify the current level, using the current meter and the current waveform using the oscilloscope.

   3. Prior to application of the test field to the EUT, the DC current supplied to the coil to generate the required test level must be calculated. This is achieved using the following equation

$$\text{Current (Amps)} = \frac{2 \times \text{Required Field Strength (A/m)} \times \text{Coil radius (m)}}{0.716 \times \text{Number of Turns on Coil}}$$

d. EUT Testing: Determine if the EUT is susceptible to DC magnetic fields.

1. Place the coil adjacent to the area of the EUT (or unit of the EUT system) to be assessed, turn it on and allow sufficient time for stabilization. See **Figure NRS04-3** for clarification.
2. The test shall be applied to each test position in turn with the coil energised first with a positive polarity and subsequently with the coil connections reversed to give a negative polarity. This reverses the direction of the magnetic field produced.
3. Monitor EUT for degradation or malfunction in performance and record result.
4. If the EUT exhibits any degradation or malfunction during application of the field reduce the current level until it resumes normal operation, record threshold level.

Note: The test field shall be applied for long enough duration to comprehensively establish whether any malfunction, degradation in performance or damage has occurred to any part of the EUT. Additionally the EUT shall be checked for permanent magnetising effects after application of the test field.

34.3.6 Data Presentation

Data presentation shall be as follows:

Results shall be presented in table form with a statement of compliance given for each EUT orientation and field polarity applied to each system or sub-system tested.

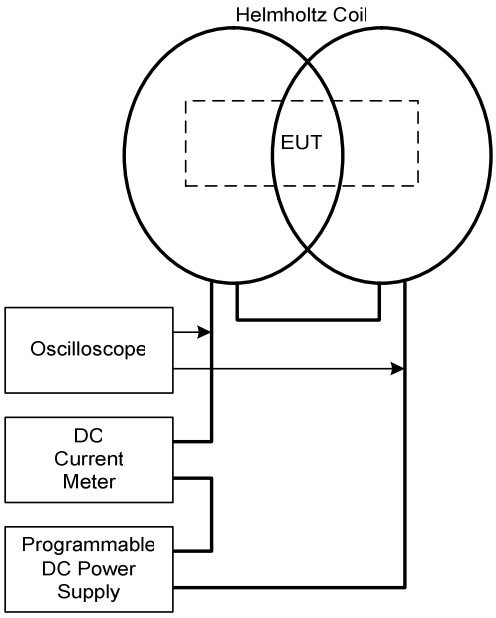

Figure NRS04-1 Equipment Calibration Setup

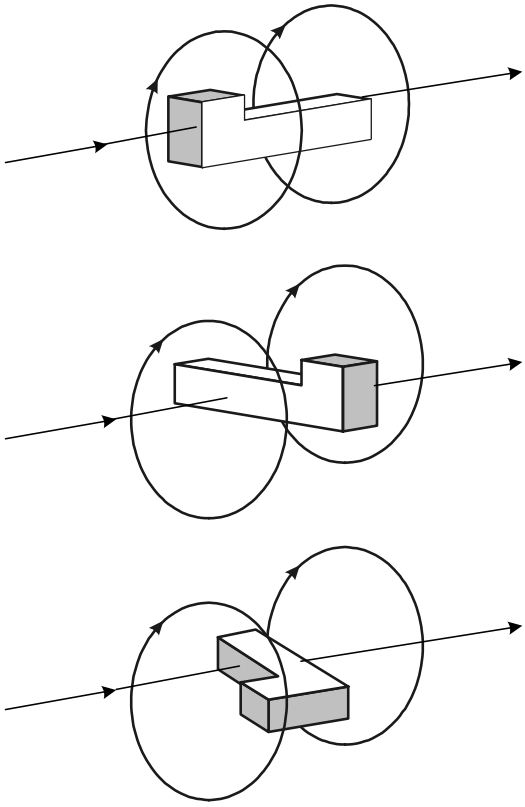

Figure NRS04-2 Arrangement of EUT within Helmholtz Coil Assembly

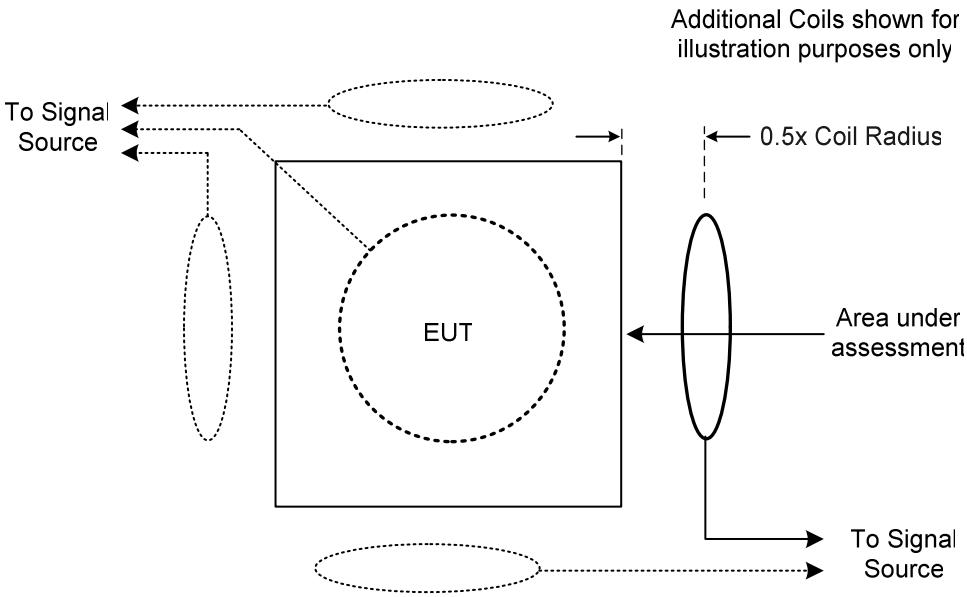

Figure NRS04-3 Localised Test Method

CATEGORY502

MAN WORN AND MAN PORTABLE EQUIPMENT

1 SCOPE 502-4

1.1 Purpose 502-4
1.2 Application 502-4

2 GUIDANCE 502-4

3 TESTING 502-4

4 GENERAL REQUIREMENTS 502-4

4.1 General 502-4
4.2 Interface Requirements 502-4
4.3 Verification Requirements 502-4

5 APPLICABILITY REQUIREMENTS 502-7

5.1 General 502-7
5.2 EMI Control Requirements versus Intended Installations 502-8

6 DETAILED TEST METHOD REQUIREMENTS 502-8

6.1 General 502-8
6.2 Units of Frequency Domain Measurements 502-8
6.3 Emission and Susceptibility Requirements, Limits, and Test Procedure 502-8
6.4 NCE05.2 Conducted Emissions Control Signal and Power Leads 500 Hz – 150 MHz 502-8
6.5 NCS07.2 Conducted Susceptibility Control and Signal Lines 50 kHz – 400 MHz 502-9
6.6 NCS12.2 Conducted Susceptibility Electrostatic Discharge 502-10
6.7 NRE01.2 Radiated Emissions Magnetic Field 500 Hz – 250 kHz 502-10
6.8 NRE02.2 Radiated Emissions Electric Field 88 MHz - 18GHz 502-11
6.9 NRS01.2 Radiated Susceptibility Magnetic Field 500 Hz – 100 kHz 502-11
6.10 NRS02.2 Radiated Susceptibility Electric Field 50 kHz – 18 GHz 502-12

7 APPLICABLE DOCUMENTS 502-13

7.1 Referenced 502-13

8 ACROYNS 502-13

9 DEFINITIONS 502-14

10 TEST PROCEDURES 502-15

10.1 NCE05.2 Conducted Emissions Control, Signal and Power Leads 500 Hz – 150 MHz. 502-15
10.2 NCS07.2 Conducted Susceptibility Control, Signal & Power Lines 50 kHz – 400 MHz . 502-19
10.3 NCS12.2 Conducted Susceptibility Electro Static Discharge (ESD) 502-24
10.4 NRE01.2 Radiated Emissions Magnetic Field 500 Hz – 250 kHz 502-25
10.5 NRE02.2 Radiated Emissions Electric Field 88 MHz – 18 GHz 502-30

10.6 NRS01.2 Radiated Susceptibility Magnetic Field 500 Hz – 100 kHz..... 502-34
10.7 NRS02.2 Radiated Susceptibility Electric Field 50 kHz – 18 GHz..... 502-39

FIGURES

Figure 502-1 Suggested Screened Room Layout for Man Worn / Man Portable Equipment 502-7

Figure NCE05.2-1 Limit for Man Worn / Man Portable Equipment 502-17

Figure NCE05.2-2 Measurement System Check 502-17

Figure NCE05.2-3 Typical Test Configuration for Man Worn Scenario..... 502-18

Figure NCE05.2-4 Typical Test Configuration for Man Portable Scenario..... 502-18

Figure NCS07.2-1 Limit for Man Worn / Man Portable Equipment (in Terms of Current to be Induced in a Calibration Jig) 502-22

Figure NCS07.2-2 Typical Test Configuration for Man Worn Scenario..... 502-23

Figure NCS07.2-3 Typical Test Configuration for Man Portable Scenario..... 502-23

Figure NRE01.2-1 Limit for Man Worn / Man Portable Land Based Equipment 502-27

Figure NRE01.2-2 Typical Test Configuration for Man Worn Scenario..... 502-28

Figure NRE01.2-3 Typical Test Configuration for Man Portable Scenario..... 502-28

Figure NRE01.2-4 Test Coil Arrangement for Magnetic Emissions (500 Hz – 250 kHz) 502-29

Figure NRE01.2-5 Calibration Configuration 502-29

Figure NRE02.2-1 Limit for Man Worn, Man Portable Land Based Equipment 502-31

Figure NRE02.2-2 Typical Test Configuration Man Worn Scenario (88 MHz – 300 MHz) 502-32

Figure NRE02.2-3 Typical Test Configuration Man Portable Scenario (88 MHz – 300 MHz). 502-32

Figure NRE02.2-4 Typical Test Configuration Man Worn Scenario (200 MHz to 18 GHz)..... 502-33

Figure NRE02.2-5 Typical Test Configuration Man Portable Scenario (200 MHz to 18 GHz) 502-33

Figure NRS01.2-1 Limit for Man Worn / Man Portable Land Based Equipment 502-36

Figure NRS01.2-2 Typical Equipment Arrangement for Calibrating Magnetic Field Radiation..... 502-37

Figure NRS01.2-3 Typical Test Configuration Man Worn Scenario..... 502-37

Figure NRS01.2-4 Typical Test Configuration Man Portable Scenario 502-38

Figure NRS02.2-1 Limit for Man Worn / Man Portable Land Based Equipment 502-41

Figure NRS02.2-2 Typical Test Configuration Man Worn Scenario (50 kHz – 30 MHz) 502-41

Figure NRS02.2-3 Typical Test Configuration Man Portable Scenario (50 kHz – 30 MHz) 502-42

Figure NRS02.2-4 Typical Test Configuration Man Worn Scenario (30 MHz to 300 MHz)..... 502-42

Figure NRS02.2-5 Typical Test Configuration Man Portable Scenario (30 MHz to 300 MHz) 502-43

Figure NRS02.2-6 Typical Test Configuration Man Worn Scenario (200 MHz to 18 GHz)..... 502-43

Figure NRS02.2-7 Typical Test Configuration Man Portable Scenario (200 MHz to 18 GHz) 502-44

TABLES

Table 502-1 Emission and Susceptibility Requirements..... 502-7

Table 502-2 Requirement Matrix..... 502-8

Table NCS07.2-1 Performance Specifications for CW Injection Probe 502-20

Table NCS07.2-2 Limits for Induced Current on EUT Wiring 502-21

CATEGORY 502

MAN WORN AND MAN PORTABLE EQUIPMENT

1 SCOPE

1.1 Purpose

The aim of this category is to cover the requirements to development a test program for all electronic, electrical and electromechanical Man Worn and Man Portable materiel. Although EMC measurements are usually specified in terms of absolute units, precise measurement is often difficult, the result depending on the method used. In the interests of repeatability, therefore, this Category specifies preferred test methods to be used. Any deviations from the practices laid down in this document shall be recorded and included with the test results.

This document needs to be read in conjunction with AECTP 500 [Ref 1] and AECTP 501 [Ref 2].

1.2 Application

See AECTP 500 – **Clause 2.2**

2 GUIDANCE

See AECTP 500 – **Clause 3**

3 TESTING

See AECTP 500 – **Clause 4**

4 GENERAL REQUIREMENTS

4.1 General

See AECTP 501 – **Clause 4.1**

4.2 Interface Requirements

See AECTP 501 – **Clause 4.2**

4.3 Verification Requirements

The general requirements related to test procedures, test facilities, and equipment, together with the detailed test procedures included in **Clause 10** shall be used to determine compliance with the applicable emissions and susceptibility requirements of this category of the standard. Any procuring activity approved exceptions or deviations from these general requirements shall be documented in the Electromagnetic Interference Test Procedures (EMITP). Equipment that is intended to be operated as a subsystem shall be tested as such to the applicable emission and susceptibility requirements whenever practical. Formal testing is not to commence without approval of the EMITP by the Command or agency concerned. Data that is gathered as a result of performing tests in one electromagnetic discipline might be sufficient to satisfy requirements in another. Therefore, to avoid unnecessary duplication, a single test program should be established with tests for similar requirements conducted concurrently whenever possible.

4.3.1 Measurement Tolerances

See AECTP 501 – **Clause 4.3.1**.

4.3.2 Shielded Enclosures

RF absorber material (carbon impregnated foam pyramids, ferrite tiles, and so forth) shall be used on the ceiling, walls and floor when performing electric field radiated emissions or radiated susceptibility testing inside a shielded enclosure to reduce reflections of electromagnetic energy and to improve accuracy and repeatability. The RF absorber shall be placed as shown in **Figure 502-1**.

Discussion: Information on suitable methods for damping screen rooms can be found in 'Report on the Stage III Research into the Damping Characterization of Screen Rooms for Radiated Emission Testing in Def Stan 59-41' [Ref 3] which can be obtained from www.dstan,co.uk.

See Also AECTP 501 **– Clause 4.3.2**

4.3.3 Other Test Sites

Not Applicable to this category.

4.3.4 Ambient Electromagnetic Noise Levels

See AECTP 501 – **Clause 4.3.2**.

4.3.5 Ground Plane

The ground plane shall be removed from the enclosure for measurements in this Category of the AECTP 500 series.

Discussion: If the Ground Plane is welded or soldered in place and is therefore not practical to remove, it may be covered in RF absorber material providing the screen room is large enough for the measurements to be performed under this arrangement and it still meets its damping performance.

4.3.6 Power Source Impedance

Not applicable to this Category.

4.3.7 General Test Precautions

See AECTP 501 – **Clause 4.3.7**

4.3.8 EUT Test Configuration

This category requires the use of a full size adult (1.8 m nominal) non metallic manikin / dummy complete with limbs for the man worn scenario and the EUT shall be positioned on the manikin to simulate its position in use. For the man portable scenario the equipment shall be positioned on a 0.45 m high non-conducting bench. See the appropriate test methods for further details.

Discussion: Emphasis is placed on 'maintaining' the specified set-up for all testing unless a particular test procedure directs otherwise.

The height of the non-conducting bench was derived from the UK DSTAN Research Programme see discussion in **Clause 4.3.2** and came from the smallest size screen room that could be effectively damped for emission measurements which were within +/- 10dB of the values that would be obtained in free space conditions in the frequency range 30 MHz to 250 MHz and +/- 6dB in the frequency range 250MHz to 1 GHz.

Note: If the equipment has dual purpose, i.e. it can be connected to an external power supply and/or control harness or antenna (such as connecting a man-pack radio to a vehicle power, control and/or antenna system) then it shall be test in both configurations in compliance with this category and AECTP 501.

4.3.8.1 *EUT Design Status*

See AECTP 501 – **Clause 4.3.8.1**.

4.3.8.2 *Bonding of EUT*

Not applicable to this category.

4.3.8.3 *Shock and Vibration Isolators*

Not applicable to this category.

4.3.8.4 *Safety Grounds*

Not applicable to this category.

4.3.8.5 *Orientation of EUTs*

For this category the EUT(s) shall be placed either on the manikin in there operational position or on a non-conducting bench depending on the scenario.

4.3.8.6 *Construction and Arrangement of EUT Cables*

Interconnecting cables should be positioned as near as possible to simulate the operational scenario. Wherever possible the actual cable harnesses normally deployed should be used.

Note: All monitoring cables to antennas/current probes shall be taken horizontally to the nearest wall and then dressed around the room to the penetration panel.

4.3.9 Operation of EUT

See AECTP 501 – **Clause 4.3.9**.

4.3.10 Use of Measuring Equipment

See AECTP 501 – **Clause 4.3.10**.

4.3.10.1 *Detector*

See AECTP 501- **Clause 4.3.10.1**.

4.3.10.2 *Computer Controlled Receivers*

See AECTP 501 – **Clause 4.3.10.2**.

4.3.10.3 *Emission Testing*

See AECTP 501 – **Clause 4.3.10.3**.

4.3.10.4 *Susceptibility Testing*

See AECTP 501- **Clause 4.3.10.4**.

4.3.11 Calibration of Measuring Equipment

See AECTP 501 – **Clause 4.3.11**.

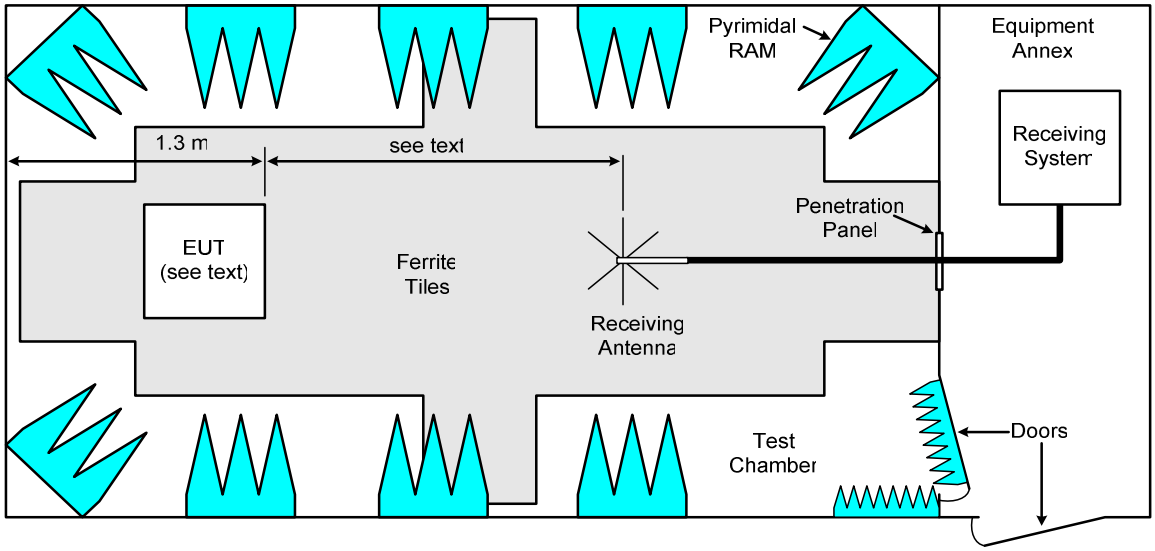

Figure 502-1 Suggested Screened Room Layout for Man Worn / Man Portable Equipment

Note 1: EUT shown for Man Portable for Man Worn scenario see the appropriate sub **Clauses 7**.

Note 2: A separation distance of at least 0.3 metres must be maintained between any equipment (including antenna) and Radio Frequency Absorber Material (RAM).

Note 3: This suggested layout is base on that described in Ref [3]

5 APPLICABILITY REQUIREMENTS

5.1 General

This clause specifies details the test applicability requirements. **Table 502-1** is a list of the specific requirements established by this standard identified by requirement number and title. Specific test procedures are implemented by approved EMITP as detailed in **Clause 10**.

See also AECTP 500 – **Clause 5.1**.

Requirement	Description
NCE05.2	Conducted Emissions Control, Signal and Power Lines 500 Hz – 150 MHz
NCS07.2	Conducted Susceptibility Control and Signal lines 50 kHz – 400 MHz
NCS12.2	Conducted Susceptibility Electrostatic Discharge
NRE01.2	Radiated Emissions Magnetic Field 500 Hz – 250 kHz
NRE02.2	Radiated Emissions Electric Field 88 MHz – 18 GHz
NRS01.2	Radiated Susceptibility Magnetic Field 500 Hz – 100 kHz
NRS02.2	Radiated Susceptibility Electric Field 50 kHz – 18 GHz

Table 502-1 Emission and Susceptibility Requirements

5.2 EMI Control Requirements versus Intended Installations

Table 502-2 shows the applicability of the test methods to each of the Land, Sea and Air service environments and should be read in conjunction with the more detailed discussion of applicability of each individual test method listed in **Clause 6**. In addition there are differences between Nations on where/whether a particular test should be applied.

Discussion: Discussion on each requirement is contained in **Clause 6**.

Man Worn / Man Portable Equipment	Requirement Applicability						
	NCE05.2	NCS07.2	NCS12.2	NRE01.2	NRE02.2	NRS01.2	NRS02.2
Man Worn Land	**P**	**P**	**Y**	**P**	**Y**	**P**	**Y**
Man Portable	**Y**	**Y**	**Y**	**Y**	**Y**	**Y**	**Y**
Ships							

Table 502-2 Requirement Matrix

Key: Y Test is required for all equipment on this type of platform

P Test is partially applicable. Selection of the test should be based on knowledge of the installation and other co-located equipment based on guidance for each test method given in **Clause 6**. These tests may also be specified / selected by the procurement authority.

6 DETAILED TEST METHOD REQUIREMENTS

6.1 General

This clause specifies detailed emissions and susceptibility requirements and the associated test procedures. General test procedures are included here.

6.2 Units of Frequency Domain Measurements

See AECTP 501 – **Clause 6.2**.

6.3 Emission and Susceptibility Requirements, Limits, and Test Procedure

Because of the nature of the equipment to be tested there will normally only be, a requirement to perform radiated emission, radiated susceptibility and electrostatic discharge tests. Only those equipments which may be connected to a host, equipment by conductive cable need be subjected to conductive emission or susceptibility tests.

The effect of the Human body has been taken in to account in the derivation of the limits.

6.4 NCE05.2 Conducted Emissions Control Signal and Power Leads 500 Hz – 150 MHz

Applicability and Limits: This requirement is applicable to all signal and control leads and secondary power leads connected to a EUT that are greater than 500 mm in length. Particular attention should be given to leads that are installed in the same conduit, trunking or cable bundles as those of other systems fitted to the same platform where cross coupling can readily occur. Where internal EUT cables interface between different component parts of the EUT only and no part of the installation cabling is closer than 15 cm to external cabling then these may be excluded from this test.

This requirement is performed to control the levels of conducted interference appearing on EUT cabling which could couple to adjacent cabling from other systems installed on the same platform.

This test may only have partial applicability to Man Worn Equipment but is required for Man Portable search type equipment (see **Table 502-2**).

The choice of frequency range is based upon the same rationale as that used for the low frequency radiated testing, i.e. it is impossible to do anything about the low frequency power frequencies below 500Hz. Current probes begin to have large correction factors applied to them above the 150MHz region.

There are recognised drawbacks to testing with current probes such as standing waves on cables and poor coupling at very low and very high frequencies. It is understood that it would be preferable to use a form of direct capacitive coupling probe, however it has to be assumed that it will not be possible to gain access to the individual conductors or cable harnesses making this type of probe impossible to use. It is also probably not practical to use the same capacitor over the entire frequency range, making a number of probes necessary.

Test Procedures: When using current probes care should be taken to make sure that the cable under test passes through the centre of the internal aperture so that measurements are more repeatable. This can most easily be achieved with the use of a non-ferrous former of some kind that holds the cable in place. When placing current probes on cabling minimise the effect of neighbouring cable harnesses on the measurement by maintaining the maximum separation distance to them.

Current probes should be positioned 50 mm from the EUT connector back shell of each signal and control lead being tested. Where signal or control leads are longer than 1 m then testing is required at both ends of the cable at frequencies above 30 MHz.

Where signals have been detected for radiated emissions the current probe should be moved along the cable or at least placed at as many locations as possible and measurements made at the emission frequency.

Ambient measurements on signal and control lines are performed at the same location as the EUT measurement but with the EUT switched off. All EUT exercising equipment must be fully functional and connected in circuit during all ambient measurements, although it is understood that in some circumstances full functionality may not be achievable due to required interaction with the EUT. Care should be taken not to introduce additional interference from exercising equipment and wherever possible this should be of a passive nature or filtered to minimise interference levels.

For the purpose of the test the EUT should be powered and in its normal mode of operation throughout and some means of indication should be present to establish its correct operation.

6.5 NCS07.2 Conducted Susceptibility Control and Signal Lines 50 kHz – 400 MHz

Applicability and Limits: This test is applicable to all power, control and signals leads connected to the EUT. Cables, which include power supply leads together with control and signal leads, are also subject to this test and shall be tested as a bundle.

In most equipment installations, cables connecting to a EUT present the easiest coupling path for interference signals and as such represent one of the major risks associated with controlling the level of interference that the EUT is subjected to. This is particularly true at RF frequencies up to 400MHz, in this frequency range cables can inadvertently act as receiving antennas from radiated emission sources due to the wavelengths involved or a coupling path for RF signals conducted on cables that are installed alongside.

Normally this test is not applied to cables shorter than 0.5 m in length but for some sensitive EUT's it may be necessary to test shorter cables where they will be installed in a hostile environment or a known susceptibility problem exists. Particular attention should be made to cables that interface to external equipment or EUT's as susceptibility issues may have a secondary affects on devices not part of the EUT test set up.

The purpose of this test is to ensure that EUT's are not susceptible to RF frequency interference signals coupled onto equipment cable looms from adjacent cabling or radiated sources.

Calibration Procedure: Prior to the test being performed the levels of power applied to the injection probe are determined in a 100 Ω calibration fixture. The input power to the injection probe is increased until the correct RF current is induced in the calibration fixture; this is maintained across the whole frequency range.

Test Procedures: Generally a monitor probe is placed 50 mm from the EUT connector of the cable being tested and the injection probe is placed at a separation distance of 50 mm from that. The susceptibility signal is swept across the frequency range at the levels previously determined in the calibration fixture. This procedure is repeated for each cable and each branch of the cable in turn being tested.

The monitor and injection probe shall be clamped around the cable under test such that the cable is located in the centre of both of the probes apertures. The cable bundle under test shall be mounted on 50 mm non-conducting spacers with respect to the ground conducting bench.

The test signal shall consist of an un-modulated carrier wave and an amplitude modulated carrier wave applied sequentially to each cable being tested. Where the EUT is found to be susceptible, the susceptibility threshold is determined by replacing the injection probe back in the calibration fixture, replicating the level of power applied to EUT and measuring the induced current.

Limits: The limits are representative of those typically found in most military installations and have been derived by empirical measurements. The procuring authority should give consideration to tailoring the limits at frequencies where specific interfering RF signals or known installation problems exist.

6.6 NCS12.2 Conducted Susceptibility Electrostatic Discharge

See AECTP 501, **Clause 6.20**.

Note: For Munitions testing the test levels in AECTP253 Ref[4] and the test methods in and AECTP 508-Leaflet 2 Ref [5] shall be applied.

6.7 NRE01.2 Radiated Emissions Magnetic Field 500 Hz – 250 kHz

The decision to include Magnetic Radiated Emissions in this category stems primarily from the fact that at lower frequencies the magnetic field dominates the electric field, furthermore it is much harder to propagate electric fields from antennas due to the wavelengths involved. From a measurement point of view not only are the transmitting antennas for electric field inefficient but so are the receiving antennas, this means that any signal has to be relatively large before it can be detected.

Magnetic fields need to be measured at close separation distances (normally circa 70mm) as the field drops off according to the inverse cube law. The magnetic loop antennas used are small (150mm diameter) and require to be moved over the surface of the EUT's faces and its associated cable harnesses. For physically large man worn equipments that have dimensions in excess of 200mm opposing sides need to be tested, smaller units need only be measured on one side for each axis that is less than 200mm. Fields should be measured parallel and at right angles to the EUT's cables, this should ensure that all signals are detected. The close measurement distance should also be able to make it possible to determine individual sources of interference when more than one system is fitted on a man, e.g. sources that cause intra emissions between systems.

There is no point in measuring signals below 500Hz as there is very little that can be done about them, any suppression components used would be large and too cumbersome to be incorporated into equipment designed to be carried by a man. Screening would require metal to be so thick that the weight would become prohibitive. Also at these low frequencies it is nearly impossible to make emission measurements without detecting the primary mains frequency (50Hz, 60Hz or 400Hz) and it's harmonics which are present all locations. Since it is not possible to screen/suppress and to a large extent is already present measuring emissions below 500Hz, or possibly even slightly higher, would serve no purpose.

At frequencies above 250kHz it is easier to use a rod antenna to measure electric field. It may be possible to increase this frequency if loops can be constructed that are sensitive enough and are of small physical size. If this frequency limit is extended too high then it may require the use of a series of different loops or the use of matching circuitry which would not be desirable.

Applicability and Limits: In order to achieve compatibility between modern equipments operating together, limitations on emissions and control of susceptibility must be clearly defined. The levels of magnetic field related to both emissions and susceptibility have been formulated from composite measurements taken within the confines of military platforms and an average level of emissions established.

Since these levels are realistic, equipment should be designed to operate satisfactorily in this environment. It may be found impracticable to meet the emission limits for some equipment in which case if the distance is established at which the amplitude limit level is met for the equipment under test, segregation by that distance from other equipment or cabling may offer a realistic alternative.

The frequency range and limit has been derived from the necessity to protect against intra-equipment operability.

This test may only have partial applicability to Man Worn Equipment but is required for Man Portable search type equipment (see **Table 502-2**).

NRS01.2 is a complimentary requirement imposed on equipment to ensure compatibility with the anticipated magnetic fields. The NRS01 limits are higher to allow for variations in performance between manufactured items and to account for the possibility that the emissions from the EUT may couple into a larger physical area than that evaluated under the NRS01.2 test procedures.

The Land NRE01.2 limit is based on preventing induction of more than 2.5 mV (5 mV for NRS01) in a 13.3 cm diameter loop. Since magnetic induction is proportional to frequency and the limit falls off at 20 dB/decade, the induced voltage in a given loop area is constant.

6.8 NRE02.2 Radiated Emissions Electric Field 88 MHz - 18GHz

Applicability and Limits: The requirements are applicable to electric field emissions from the EUT and associated cables. The basic intent of the requirement is to protect sensitive receivers from interference coupled through the antennas associated with the receiver. Many tuned receivers have sensitivities on the order of one microvolt and are connected to an intentional aperture (the antenna), which are constructed for efficient reception of energy in the operating range of the receiver. The potential for degradation requires relatively stringent requirements to prevent intra operability problems.

There is no implied relationship between this requirement and NRS02 that addresses radiated susceptibility to electric fields. Attempts have been made quite frequently in the past to compare electric field radiated emission and susceptibility type requirements as a justification for deviations and waivers. While NRE02 is concerned with potential effects with antenna-connected receivers, NRS02 simulates fields resulting from antenna-connected transmitters and from external transmitters.

Although this approach is sensitive enough to measure emission levels accurately to be able to determine whether an emission is liable to cause an intra-equipment problem, it will most likely be unable to pin point where a signal is being transmitted from other than in very general terms. A conducted emission test using a current probe over the harnesses at the emissive frequency will be required to identify the point of propagation.

6.9 NRS01.2 Radiated Susceptibility Magnetic Field 500 Hz – 100 kHz

Applicability and Limits: This requirement is specialised and intended primarily to ensure that performance of equipment potentially sensitive to low frequency magnetic fields is not degraded. NRE01.2 is a complimentary requirement governing the radiated magnetic field emissions from equipment and subsystems. The NRE01.2 discussion is also applicable to this requirement.

Land has maintained the basic relationship of the NRS01.2 and NRE01.2 limits having the same shape. The NRS01 limit is based on 5 mV (independent of frequency) being induced in a 12.7 cm diameter loop.

This test may only have partial applicability to Man Worn Equipment but is required for Man Portable search type equipment (see **Table 502-2**).

The use of a modified limit is may be required to cater for more sensitive areas in the intra-equipment scenario.

Discussion: Laboratory tests have been performed to assess the possibility of using the 13.3 cm loop sensor specified in the NRE01.2 test procedure instead of the 4 cm loop sensor used in this test procedure to verify the radiated field. The testing revealed that the 13.3 cm loop sensor did not provide the desired result due to variation of the radiated field over the area of the loop sensor. Due to its smaller size, the 4 cm loop sensor provides an accurate measure of the field near the axis of the radiating loop. A correction factor curve to convert from the voltage indicated by the measurement receiver to the magnetic field in dBpT is required. Manufacturers use different construction techniques that cause the actual factor to vary somewhat. Where traceable calibration figures are not available it is necessary to use the manufacturers' supplied data.

Test Procedures: The requirement is that the testing be performed at each electrical interface connector. On some small size EUTs, connectors may be closely spaced such that more than one connector can be effectively illuminated for a particular loop position. The EMITP should address these circumstances.

6.10 NRS02.2 Radiated Susceptibility Electric Field 50 kHz – 18 GHz

Applicability and Limits: The requirements are applicable to both the EUT associated cabling. The basic concern is to ensure that equipment will operate without degradation in the presence of electromagnetic fields generated by antenna transmissions both onboard and external to the platform.

The EUT is subjected to lower frequency radiated fields (down to 50 kHz) to determine its vulnerability to emissions generated within the EUT's normal installation by other electronic/electrical components, such as those associated with switch mode power supplies.

There is no implied relationship between this requirement and NRE02. The NRE02 limit is placed primarily to protect antenna-connected receivers while NRS02 simulates fields resulting from antenna transmissions.

The limits specified are simply based on the levels expected to be encountered during the service life of the equipment. They do not necessarily represent the worst-case environment to which the equipment may be exposed. RF environments can be highly variable, particularly for emitters not located on the platform. The limits are placed at levels that are considered to be adequate to cover most situations.

Possible tailoring by the procuring authority for contractual documents is to modify the required levels and required frequency ranges based on the emitters on and near a particular installation. Actual field levels can be calculated from characteristics of the emitters, distances between the emitters and the equipment, and intervening shielding. AECTP 258 (Ref 6) provides information which contributes to the overall electromagnetic environment. The possible use of the equipment in other installations and the potential addition or relocation of RF emitters needs to be considered. Other possible tailoring is to change from the standard 1 kHz, square wave modulation or use additional modulations based on actual platform environments.

The field strength is monitored at the EUT with a small field probe externally connected to a monitor with a fibre optic cable. The use of a modified limit may be required to cater for more sensitive areas in the intra-equipment scenario.

7 APPLICABLE DOCUMENTS

7.1 Referenced

Ref 1	AECTP 500	Introduction to Electrical / Electromagnetic Environmental Effects Test and Verification
Ref 2	AECTP 501	Electrical / Electromagnetic Environmental Effects Test and Verification Equipment and Sub System Tests
Ref 3	DStan Research Rpt	Report on the Stage III Research into the Damping Characterization of Screen Rooms for Radiated Emission Testing
Ref 4	AECTP 253	Electrical / Electromagnetic Environmental Conditions Electrostatic Charging, Discharge and Precipitation Static
Ref 5	AECTP 508	Electrical/Electromagnetic Environmental Effects Test and Verification Leaflet 2 Electrostatic Discharge Munitions Test Procedure
Ref 6	AECTP 258	Electrical / Electromagnetic Environmental Conditions RF Electromagnetic Environments
Ref 7	NATO AAP-55	NATO Glossary of E3 Terms and Definitions English and French

8 ACROYNS

The following acronyms are used in this category are:

cm	Centimetre
CW	Continuous Wave
ECM	Electronic Countermeasures
EED	Electro Explosive Device
EM	Electromagnetic
EMC	Electromagnetic Compatibility
EME	Electromagnetic Environment
EMI	Electromagnetic Interference
EMICP	Electromagnetic Interference Control Procedures
EMITP	Electromagnetic Interference Test Procedures
EMITR	Electromagnetic Interference Test Report
ESD	Electro Static Discharge
EUT	Equipment Under Test
mV	milli Volts
RAM	Radio Frequency Absorber Material
RF	Radio Frequency
RMS	Root Mean Square
V	Volts
V/m	Volts per Metre
W	Watts

9 DEFINITIONS

Ambient Noise

The background levels of electromagnetic energy emanating from sources other than the equipment under test. This energy may arise from atmospheric or man-made noise. The ambient noise level is the level present with the equipment under test de-energised and all ancillary test equipment operating.

Bandwidth (of a Receiver, Amplifier or Network)

The extent of a continuous range of frequencies over which, the gain does not differ from its maximum value by more than a specified amount.

Conducted Emission

Electromagnetic energy which is propagated along a conductor.

Conducted Susceptibility

Assessment of the immunity of the equipment under test to potentially interfering signals propagated by conduction.

Current Probe

A sensor which can be clamped around a conductor or conductors and which produces an output proportional to the net current flowing in that conductor or conductors.

Electrostatic Discharge (ESD)

The passage of a pulse of current between an electrostatically charged object and a conducting body having capacitance to, or being connected to, earth.

Equipment Under Test (EUT)

Equipment being assessed for procurement purposes. It may comprise complete systems, subsystems or single units. The exact extent of equipment to be assessed shall be that detailed in the test plan.

Field Strength

In radio wave propagation, the magnitude of a component of any specified polarization of the electric or magnetic field. May be expressed in, volts per metre or amps per metre respectively.

Radiated Emission

Signals and/or noise propagated by radiated fields.

Radiated Susceptibility

The immunity of the equipment under test to potentially interfering signals propagated by radiation.

10 TEST PROCEDURES

10.1 NCE05.2 Conducted Emissions Control, Signal and Power Leads 500 Hz – 150 MHz

10.1.1 Applicability

This test is only applicable to EUTs with cables. This test is not applicable to co-axial antenna feeders or cable less than 500 mm in length. All branches of the EUT harnesses are subject to this test. The EMITP must indicate which of the control and signal lines are grouped together in a typical installation. The EMITR will indicate the groupings and layout used. Reference should also be made to **Clause 6.4**.

10.1.2 Limits

Conducted emissions on the power, control and signal leads shall not exceed the limit shown in **Figure NCE05.2-1** for Man Worn, Man Portable Land Based Equipment.

10.1.3 Test Procedure

10.1.3.1 Purpose

The purpose of this test is to ensure that the common mode conducted emissions on all control, signal and power lines to the equipment under test (EUT) are controlled to the appropriate limits in order to provide adequate protection to radio reception and to minimise disturbance to any co-located sensitive electronic equipment for land based application.

10.1.3.2 Test Equipment

The test equipment shall be as follows:

a. Measurement Receivers

b. Current Probes

c. Signal Generator

d. Data Recording Device

e. Oscilloscope

f. Resistor (R)

10.1.3.3 Setup

The test setup shall be as follows:

a. The typical EUT test layout is shown in **Figure 502-1**. Reference should also be made, to **Clause 4.3.8**.

b. Calibration: Configure the test setup for the measurement system check as shown in **Figure NCE05.2-2**.

c. EUT Testing:

(1) Configure the test setup for compliance testing as shown in **Figures NCE05.2-3** and **NCE05.2.4**.

(2) The probe is positioned 50 mm from the EUT for signal, control and secondary power leads. Where the backshell of the connector prevents this then the probe will be positioned as close as possible and a record made of its exact location.

(3) On signal, control and secondary power leads measurements above 30 MHz must be performed at both ends. Leads that are less than 1 metre in length need not be subjected to testing.

(4) Reference should also be made, to **Clauses 4.3.4**, **4.3.9**, and **4.3.10**.

10.1.3.4 Procedures

The test procedures shall be as follows:

a. Turn on the measurement equipment and allow a sufficient time for stabilization.

b. Calibration: Evaluate the overall measurement system from the current probe to the data output device.

(1) Apply a calibrated signal level, which is at least 6 dB below the applicable limit at 1 kHz, 3 kHz, and 10 kHz, 100 kHz, 1 MHz, 10 MHz and 150 MHz to the current probe.

(2) Verify the current level, using the oscilloscope and load resistor; also, verify that the current waveform is sinusoidal.

(3) Scan the measurement receiver for each frequency in the same manner as a normal data scan. Verify that the data recording device indicates a level within ±3 dB of the injected level.

(4) If readings are obtained which deviate by more than ±3 dB, locate the source of the error and correct the deficiency prior to proceeding with the testing.

EUT Testing: Determine the conducted emissions from the EUT, signal and control leads plus secondary power leads including returns.

(1) Turn on the EUT and allow sufficient time for stabilization.

(2) Select an appropriate lead for testing and clamp the current probe into position.

(3) Scan the measurement receiver over the applicable frequency range, using the bandwidths and minimum measurement times specified in **Table 501-2** of Category 501.

(4) Repeat **Clause 10.1.3.4.c (3)** for each power, control and signal lead

Note: Some harnesses may contain cables conducting power supplies generated within one EUT of the system to another EUT of the system, i.e. secondary power supplies. These power supply cables will be measured together with all other cables in that particular cable harness branch.

10.1.4 Data Presentation

Data presentation shall be as follows:

a. Continuously and automatically plot amplitude versus frequency profiles on X-Y axis outputs. Manually gathered data is not acceptable except for plot verification.

b. Display the applicable limit on each plot.

c. Provide a minimum frequency resolution of 1% or twice the measurement receiver bandwidth, whichever is less stringent, and a minimum amplitude resolution of 1 dB for each plot.

d. Provide plots for both the measurement and system check portions of the procedure.

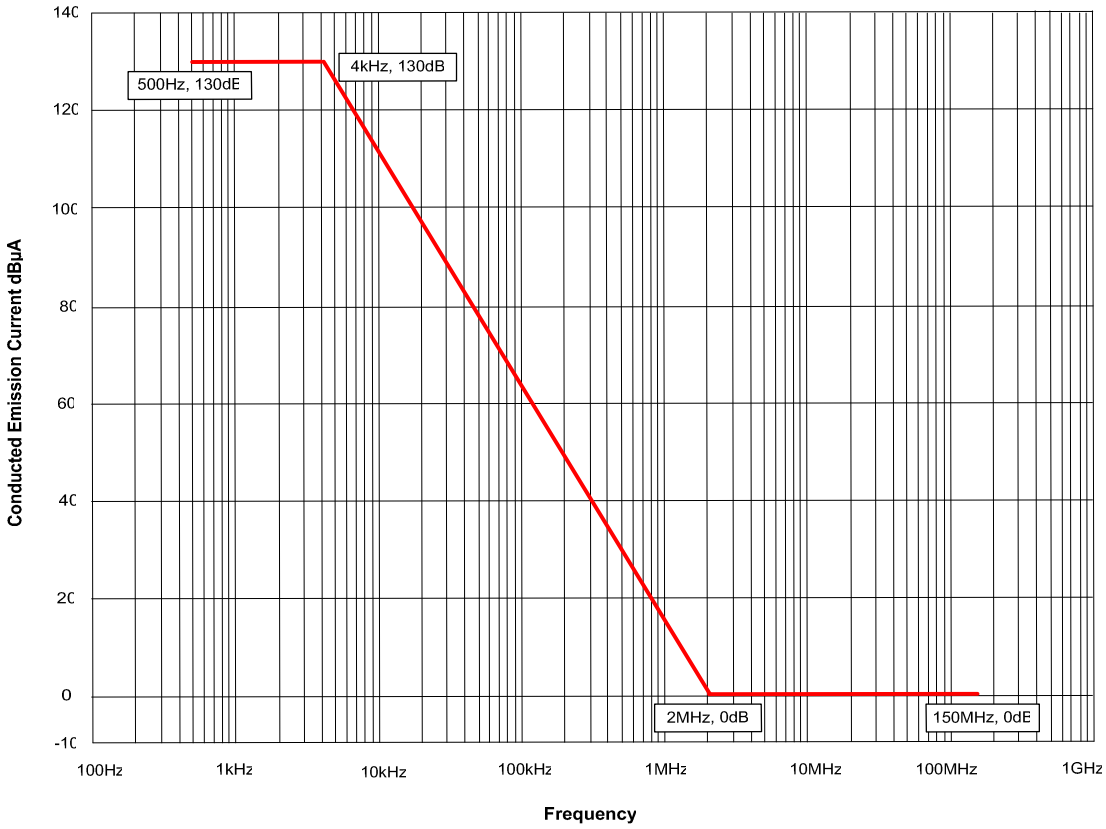

Figure NCE05.2-1 Limit for Man Worn / Man Portable Equipment

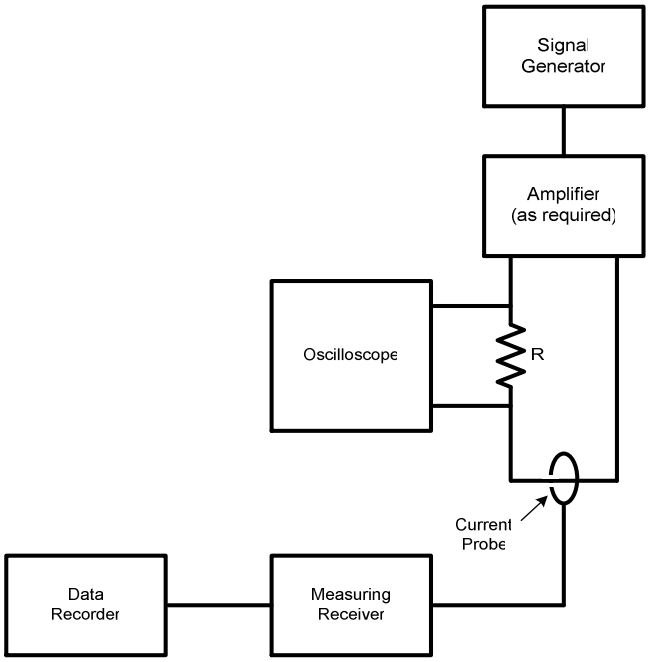

Figure NCE05.2-2 Measurement System Check

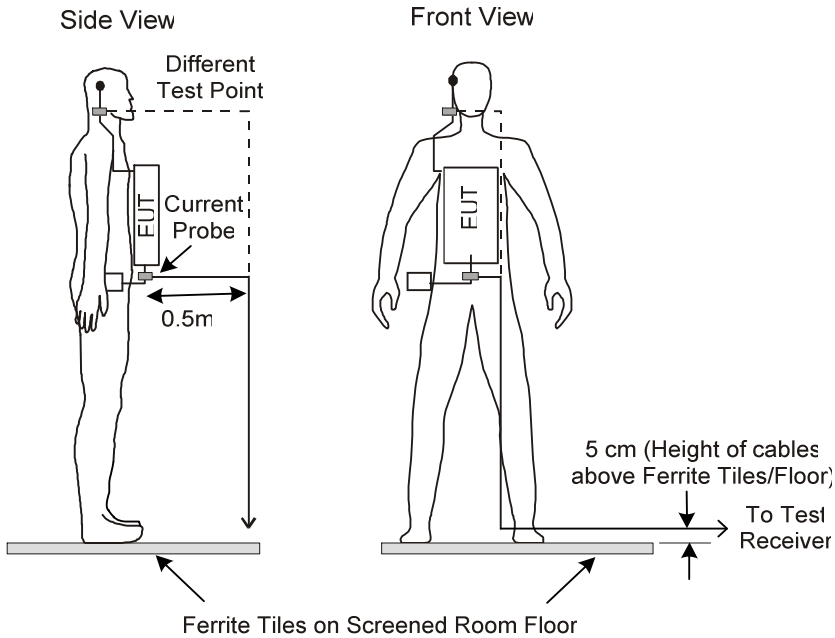

Figure NCE05.2-3 Typical Test Configuration for Man Worn Scenario

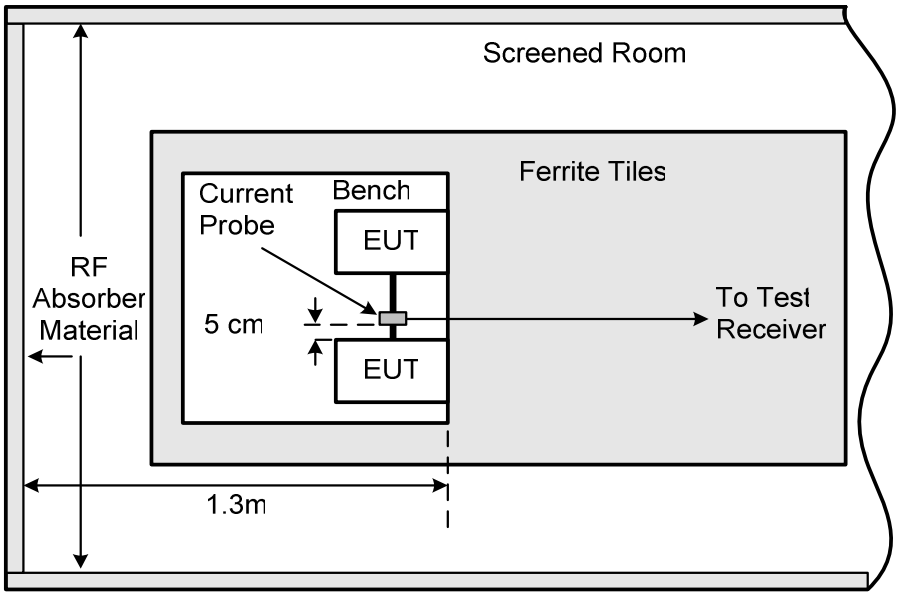

Figure NCE05.2-4 Typical Test Configuration for Man Portable Scenario

Note: The cable from the probe drops vertically to the floor first then to the test receiver as shown in **Figure NCE05.2-3.**

10.2 NCS07.2 Conducted Susceptibility Control, Signal & Power Lines 50 kHz – 400 MHz

10.2.1 Applicability

Cable looms which connect the EUT to other equipments in the total system (including primary power lines) and those interconnecting units of the EUT are subject to this test. Cable looms can be tested as a whole or individual wires can be tested. The looms or individual wires to be tested will be defined in the equipment test plan but some basic ground rules are:

a. All looms shall be tested as a whole, connector by connector.

b. On some EUTs (including sub systems responsible for the control and/or initiation of Electro Explosive Devices (EEDs)) individual wires and/or branch looms may be selected for testing in addition to (a) above as defined by the Procuring Authority.

Reference should also be made to **Clause 6.5**.

Note: For a system with built in redundancy simultaneous injections on several looms may be required by the Procuring Authority.

10.2.2 Limit

The limits in terms of current in the calibration jig are shown in **Figure NCS02.2-3** for Man Worn, Man Portable Land Based Equipment.

Note: The limits are in peak values and apply to each of the modulation characteristics specified in **Clause 4.3.10.4**.

10.2.3 Test Procedures

Clause 4.3.10.4 should be studied before commencement of this test. **Figures NCS07.2-2** and **NCS07.2-3** show typical layouts for the man worn and man portable tests respectively.

10.2.3.1 Purpose

The purpose of this test is to confirm that RF signals in the range 50 kHz to 400 MHz, when coupled on to the interconnecting cable looms and power supply lines of an EUT, will not cause degradation of performance. In addition this test will identify the thresholds of susceptibility for the system which, when compared with the levels of current on the looms (or cables) caused by adjacent or nearby transmitting sources measured during system acceptance trials, will assist in the establishment of adequate safety margins.

10.2.3.2 Test Equipment

The probes used for these tests should have the following characteristics when driving current into the 100 Ω calibration jig and **Table NCS07.2-1**:

a. The insertion loss should be within the limits shown in **Table NCS07.2-1**. The empirically established performance specifications for bulk current injection probes driven in the CW mode, is presented in **Table NCS07.2-1**. These specifications are based on normal drive conditions in which probe cores are NOT driven into magnetic saturation. Test engineers are cautioned to ensure that measurements are NOT taken under core saturation conditions, during either calibration or equipment testing.

b. Probes shall be capable of delivering the jig currents shown in **Figure NCS07.2-3**.

Frequency Range (MHz) Self Inductance (mH) ± 20% Self Resonant Frequency ± 20% Resonant Impedance Ω ± 25%	0.05 – 4.0 29.2 1.25 394	4 – 200 0.7 53.5 233	200 – 400 0.35 70.0 165
Insertion Loss (dB) ± 3dB at			
0.0 5 MHz	21.0		
0.1 MHz	15.0		
0.2 MHz	12.0		
0.3 MHz	10.7		
0.4 MHz	10.1		
0.5 MHz	9.9		
1.0 MHz	10.0		
4.0 MHz	11.0	11.0	
10.0 MHz		6.0	
30.0 MHz		4.9	
100.0 MHz		5.0	
200.0 MHz		5.5	5.5
400.0 MHz			6.0
Max CW input drive: (W)	100	100	100

Table NCS07.2-1 Performance Specifications for CW Injection Probe

10.2.3.3 Procedures

The test method has two main elements:

a. Calibration of the current injection probes, which must be done prior to each equipment test or series of consecutive tests. **Clause 7.2.3.4**.

b. The equipment test. **Clause 10.2.3.5**.

Note 1: Modulation requirements are specified in **Clause 4.3.10.4**.

Note 2: The injection probes required for this test are designed to operate in the linear portion of their characteristics for the levels stipulated. If non-linear effects are observed during calibration, i.e. a 1 dB increase in forward power does not produce a corresponding 1 dB increase in the current flowing in the jig then the power amplifier or the injection probe is approaching saturation. If this effect is observed then non-recoverable damage may occur to the probe and investigative action must be taken.

10.2.3.4 Calibration

The following calibration procedure shall be performed prior to the equipment test(s) using the same test equipment layout and probes as will be used for those tests. The injection probe shall be installed in the 100 Ω calibration jig as described in AECTP 501 **Clause 6.15** and shown in **Figure 501-19**. The calibration jig shall be terminated into a 50 Ω, 50 W (minimum) RF coaxial load at one end and by a 50 Ω measuring system (spectrum analyser or RF voltmeter) at the other. A 20 dB power attenuator of

50 W minimum rating will be required to protect the input of the measuring system. The VSWR of the terminations at both ends of the calibration jig shall be less than 1.2: 1 over the frequency range of the test. The injection probe is fed with power from the signal source via the power amplifier. The limits specified for this test method are in terms of current induced in the calibration jig.

The test signal supplied to the injection probe shall be increased until the voltmeter or spectrum analyser indicates that the level of current shown in the limit curve is flowing in the calibration jig. The forward power flow to the probe shall be recorded. These measurements are to be made over the frequency range 50 kHz to 400 MHz at sufficient intervals to ensure that amplitude variations are less than 1 dB between each measurement point.

The calibration curves shall be shown in the EMITP. The forward powers to the current injection probes to give the level of current shall become the `test level' for the equipment test.

Note: This procedure needs to be repeated for every modulation applied.

10.2.3.5 EUT Testing

a. This test may be applied to whole cable looms or individual conductors, those to be tested being defined in the equipment test plan.

b. As a minimum requirement, the injection probe shall be connected around the complete cable loom and subsequently around any branches of that loom. Wherever practical the current monitor probe shall be connected around the complete cable loom 50 mm from the connector, in cases where this is not possible the monitor position shall be noted in the test report. If the overall length of the connector and backshell exceeds 50 mm, the monitor probe shall be placed as close to the connector's backshell as possible. This may not always be possible where harnesses are integral to items of clothing, under these conditions record probe position.

c. The current injection probe shall be fitted around the loom or conductor under test such that the separation between it and the monitor probe is as close to but not less than 50 mm.

d. Radio frequency power applied to the injection probe shall be swept over the test frequency range and the parameters of induced current and forward power recorded. Recordings are required at the test level if no malfunctions occur or at the threshold condition if malfunctions do occur. Care must be taken not to overheat the cable under test as the injection probe reaches a high temperature with prolonged excitation. To avoid damage to the EUT wiring the induced current shall be limited to the values shown in **Table NCS07.2-2**. The EUT is deemed to have passed the test criterion if no malfunction occurs at the induced current levels shown in Table 6 before the forward power levels required for the test assessment are reached. The test level requirement is assumed to have been met if no malfunction occurs when the induced current levels shown in **Table NCS07.2-2** are reached before the forward power test levels..

Frequency Range (MHz)	Maximum Induced Current Levels (A)
0.05 – 2.0	0.4
2.0 - 400	2.0

Table NCS07.2-2 Limits for Induced Current on EUT Wiring

e. At frequencies where the test sample is susceptible, the signal amplitude shall be reduced until a threshold of susceptibility is determined. Check for hysteresis in signal amplitudes by decreasing and then increasing through the susceptibility threshold. The lower of the two values shall be recorded.

10.2.4 Data Presentation

Data presentation shall be as follows:

a. Provide amplitude versus frequency plots for the forward power levels required to obtain the calibration level as determined

b. Provide tables showing scanned frequency ranges and statements of compliance with the requirements for the susceptibility evaluation for each interface connector. Provide any susceptibility thresholds that were determined, along with their associated frequencies.

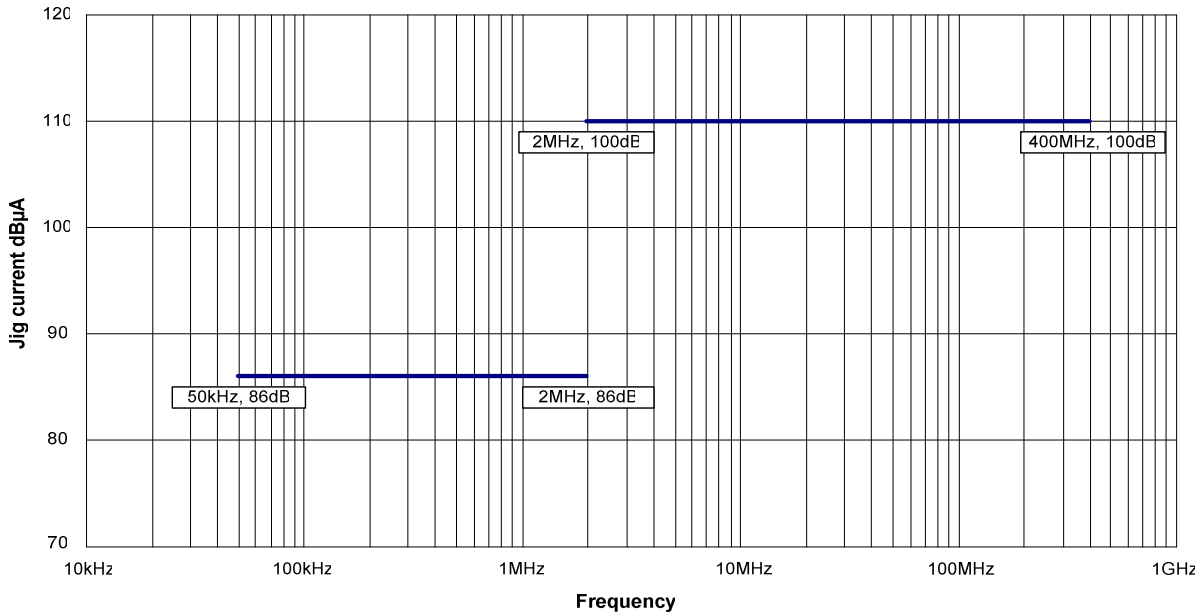

Figure NCS07.2-1 Limit for Man Worn / Man Portable Equipment (in Terms of Current to be Induced in a Calibration Jig)

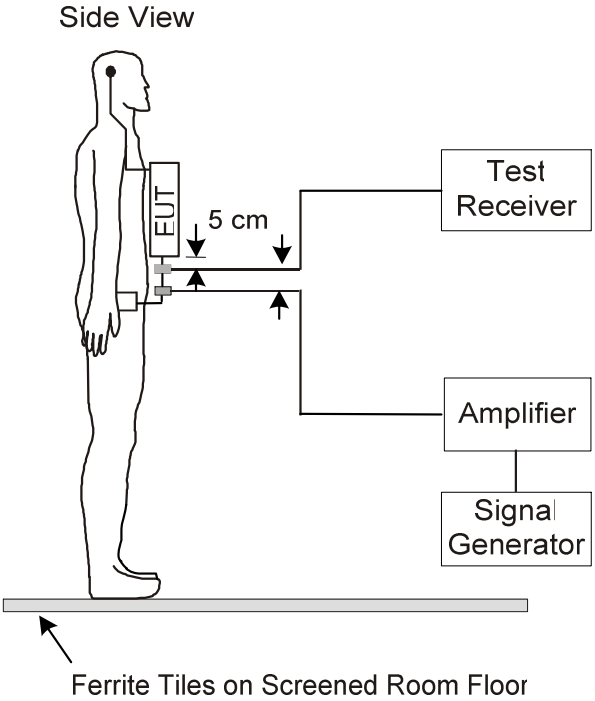

Figure NCS07.2-2 Typical Test Configuration for Man Worn Scenario

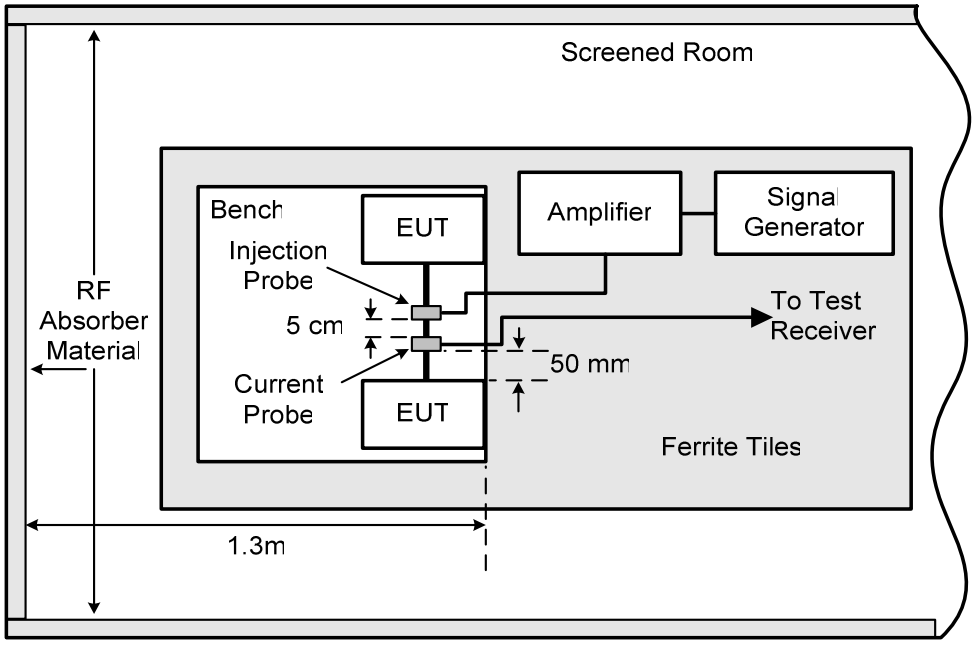

Figure NCS07.2-3 Typical Test Configuration for Man Portable Scenario

10.3 NCS12.2 Conducted Susceptibility Electro Static Discharge (ESD)

10.3.1 Applicability

This test applies to all Man Worn / Man Portable Equipment.

See AECTP 501, **Clause 6.20** and Test Method NCS12 for Limits and Test Procedure.

10.4 NRE01.2 Radiated Emissions Magnetic Field 500 Hz – 250 kHz

10.4.1 Applicability

This requirement is applicable for radiated emissions from equipment and subsystem enclosures including electrical cable interfaces

Reference should also be made to **Clause 6.7**

10.4.2 Limits

Magnetic field emissions shall not be radiated in excess of the levels shown in **Figure NRE1.2-1** for Man Worn, Man Portable Land Based Equipment.

10.4.3 Test Procedures

10.4.3.1 Purpose

The test procedure is used to verify that the magnetic field emissions from the EUT and its associated electrical interfaces do not exceed specified requirements.

10.4.3.2 Test Equipment

The test equipment shall be as follows:

a. Measuring Receivers

b. Data Recording Device

c. Loop Sensor – As defined in AECTP 501 NRE01.1 Test Method

d. Ohmmeter

e. Signal Generator

10.4.3.3 Setup

The test setup shall be as follows:

a. Maintain a basic setup for the EUT as shown in **Figures NRE01.2-2** and **NRE01.2-3** but reference to **Clause 4.3.8** is also required

b. Calibration: Configure the measurement setup as shown in **Figure NRE01.2-4.**

c. EUT Testing: The location and orientation of the coil with respect to the EUT is shown in **Figure NRE01.2-5.**

Note: Ferrite tiles on the floor of the screen room are optional for this test.

10.4.3.4 Procedures

The test procedures shall be as follows:

a. Turn on the measurement equipment and allow sufficient time for stabilization

b. Calibration:

(1) Apply a calibrated signal level which is at least 6 dB below the limit (limit minus the loop sensor correction factor), at a frequency of 50 kHz. Tune the measurement receiver to a centre frequency of 50 kHz. Record the measured level.

(2) Verify that the measurement receiver indicates a level within ±3 dB of the injected signal level.

(3) If readings are obtained which deviate by more than ±3 dB, locate the source of the error and correct the deficiency prior to proceeding with the testing.

(4) Using an ohmmeter, verify that the resistance of the loop sensor winding is approximately 10 Ω.

c. EUT Testing:

(1) Turn on the measurement equipment and allow sufficient time for stabilization

(2) Locate the loop 7 cm from the EUT or electrical interface connector being probed. Orient the plane of the loop sensor parallel to the EUT faces and parallel to the axis of the connectors.

(3) Scan the measurement receiver over the applicable frequency range to locate the frequencies of maximum radiation using the bandwidths and minimum measurement times of **Table 2** in AECTP 501.

(4) Tune the measurement receiver to one of the frequencies or band of frequencies identified in **Clause 10.4.3.4.c (3)**.

(5) Monitor the output of the measurement receiver while moving the loop sensor (maintaining the 7 cm spacing) over the face of the EUT or around the connector. Note the point of maximum radiation for each frequency identified in **Clause 10.4.3.4.c (4)**.

(6) At 7 cm from the point of maximum radiation, orient the plane of the loop sensor to give a maximum reading on the measurement receiver and record the reading.

(7) Repeat **Clause 10.4.3.4.c (4)** through to **10.4.3.4 c (6)** for at least three frequencies of maximum radiation per octave above 500 Hz.

(8) Repeat **Clause 10.4.3.4.c (2)** through to **10.4.3.4.c (7)** for each face of the EUT and for each EUT electrical connector.

In the event of the unit under test exceeding the specified limit at 70 mm, the distance and position at which compliance is achieved shall be declared.

Reference to **Clauses 4.3.4**, **4.3.10**, and **4.3.11** is also required.

Note: Where a physical dimension of the EUT is less than 7 cm it is only necessary to measure one of the opposing sides. If one of the Man Worn EUT dimensions is greater than 7 cm, then the test may need to be performed on the bench since it will not be possible to access the opposing side of the EUT due to the manikin.

10.4.4 Data Presentation

Data presentation shall be as follows:

a. Provide graphs of scans and tabular listings of each measurement frequency, mode of operation, measured magnetic field, and magnetic field limit level.

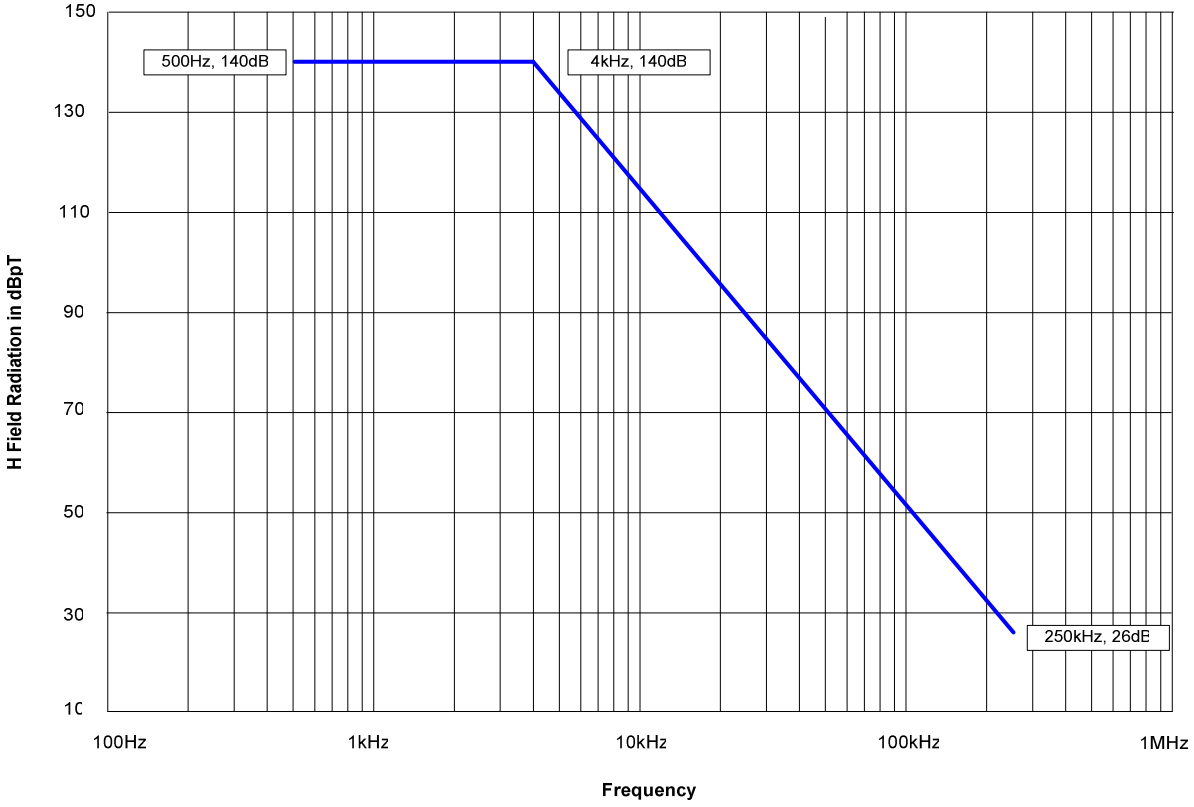

Figure NRE01.2-1 Limit for Man Worn / Man Portable Land Based Equipment

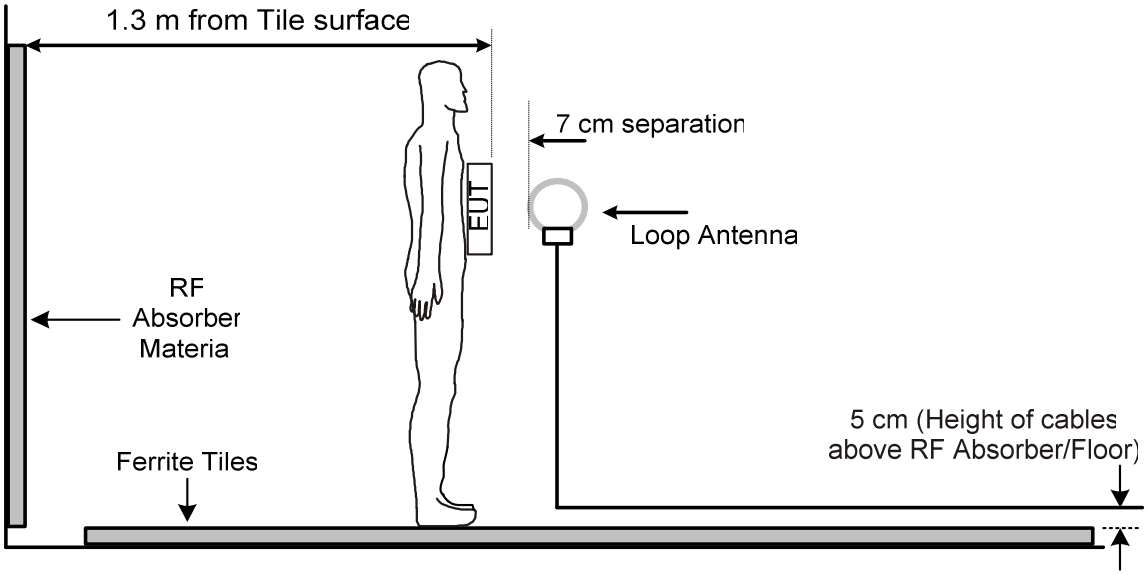

Figure NRE01.2-2 Typical Test Configuration for Man Worn Scenario

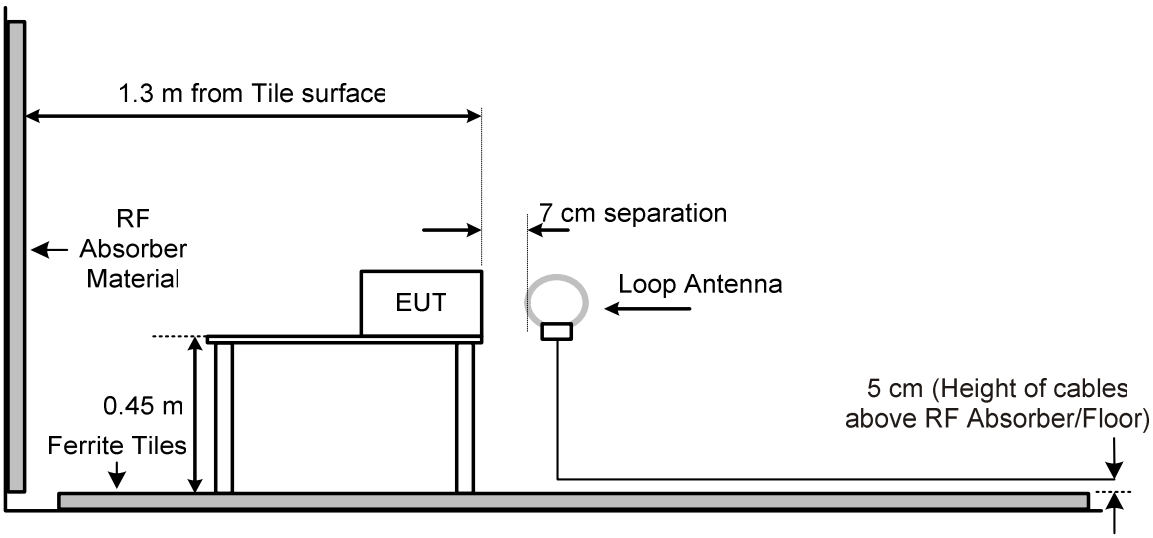

Figure NRE01.2-3 Typical Test Configuration for Man Portable Scenario

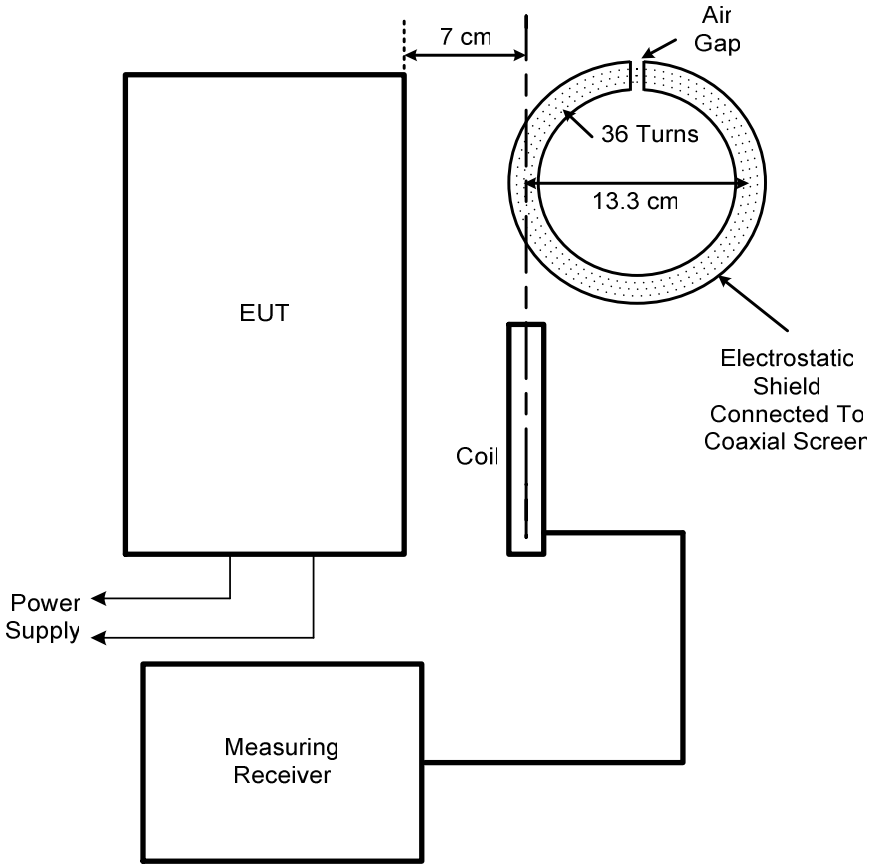

Figure NRE01.2-4 Test Coil Arrangement for Magnetic Emissions (500 Hz – 250 kHz)

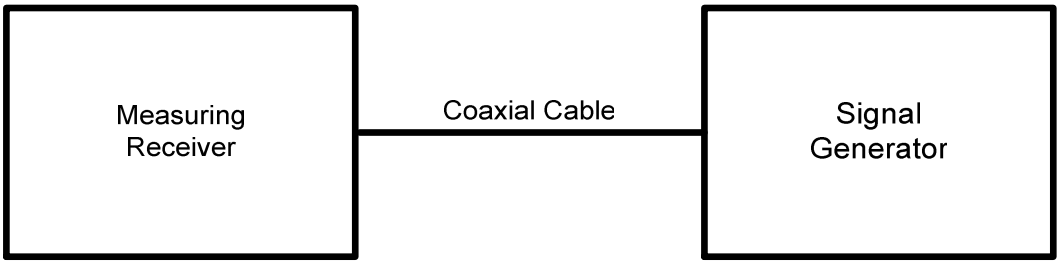

Figure NRE01.2-5 Calibration Configuration

10.5 NRE02.2 Radiated Emissions Electric Field 88 MHz – 18 GHz

10.5.1 Applicability

This test is applied to the EUT, and its connecting harness.

Transmissions from antennas are not subject to the limit of this test but are subject to the performance specification requirements. Equipment for test which are normally connected to antennas shall for this test be fitted with a screened dummy antenna where possible and be subject to the limits of this test. The limit at the fundamental frequency of transmission may be relaxed at the discretion of the Project Authority.

Reference should also be made to **Clause 6.8**.

10.5.2 Limits

The recommended limit and frequency range is shown in **Figure NRE02.2-1** for Man Worn, Man Portable Land Based Equipment.

10.5.3 Test Procedure

10.5.3.1 Purpose

The purpose of this test is to confirm that the electric field emissions have been controlled to the required limits so that the performance of the most sensitive equipment (communications receivers etc.) is not impaired.

10.5.3.2 Test Equipment

The test equipment shall be as follows:

a. Measuring Receiver

b. Data Recording Device

c. Antennas:

(1) 88 MHz to 300 MHz: Bi-conical, 137 cm Tip to Tip

(2) 200 MHz to 1 GHz: Double Ridge Horn

(3) 1 GHz to 18 GHz: Double Ridge Horn

d. Signal Generator

10.5.4 Test Setup

The test setup shall be as follows:

a. Maintain the typical EUT test layouts as shown in **Figures NRE02.2-2**, **NRE02.2-3**, **NRE02.2-4** and **NRE02.2-5**. Reference must also be made to **Clauses 4.3.4** and **4.3.8**.

b. EUT Testing: The radiated emissions are monitored using the specified antennas for each mode defined in the EMITP. For small test samples the monitoring antennas shall be positioned opposite the test sample. Reference to clauses 4.3.4, 4.3.10, and 4.3.11 is also required.

c. All antennas are situated at a separation distance of 1m from the closest surface of the EUT.

d. Bi-conical and Horn antennas are mounted at a height of 1 m from the screened room floor on a non-conductive antenna stand.

e. For man worn equipments the EUT is mounted on a manikin (Dummy) in a position that mimics the normal layout on the person as close as is practically possible. The manikin (Dummy) itself stands on the floor of the screened room. For man portable equipment the EUT is sited on a non-conducting bench above the RF absorber material.

10.5.4.1 Procedure

The test procedure shall be as follow:

10.5.5 Data Presentation

Data Presentation shall be as follows:

a. Continuously and automatically plot amplitude versus frequency profiles. Manually gather data is not acceptable except for plot verification. Vertical and Horizontal data for a particular frequency range shall be presented on separate plots or shall be clearly distinguishable for a common plot.

b. Display the applicable limit on each plot.

c. Provide a minimum frequency resolution of 1% or twice the measurement receiver bandwidth, whichever is less stringent and a minimum amplitude resolution of 1 dB for each plot.

d. Provide plots for both the measurement and system check portions of the procedure.

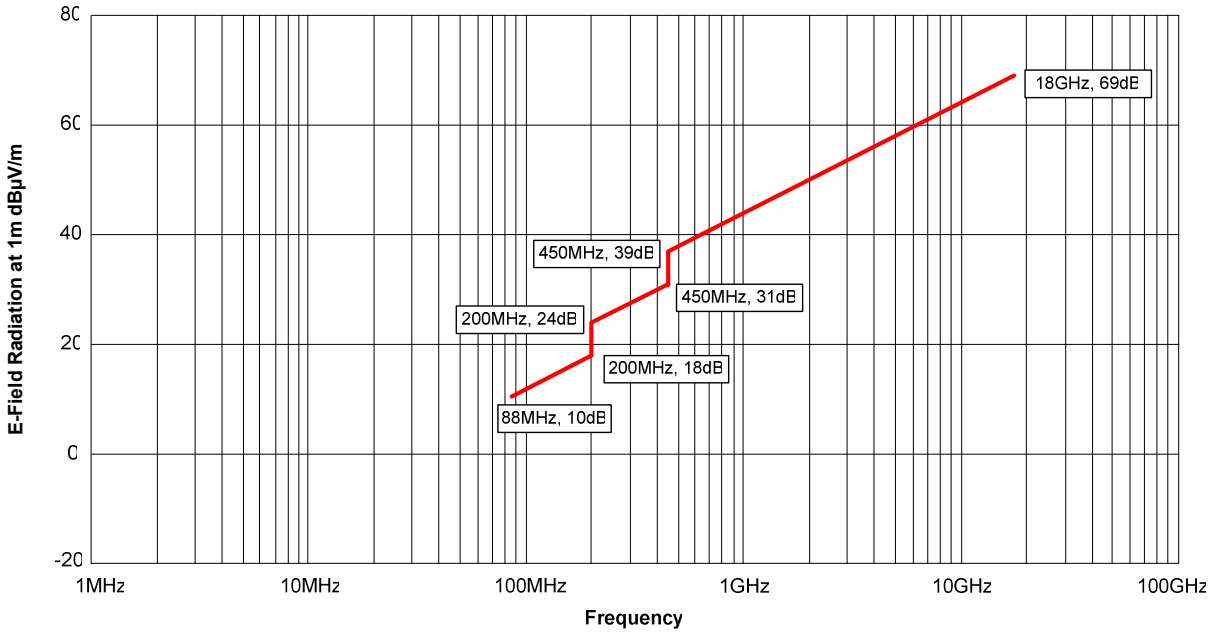

Figure NRE02.2-1 Limit for Man Worn, Man Portable Land Based Equipment

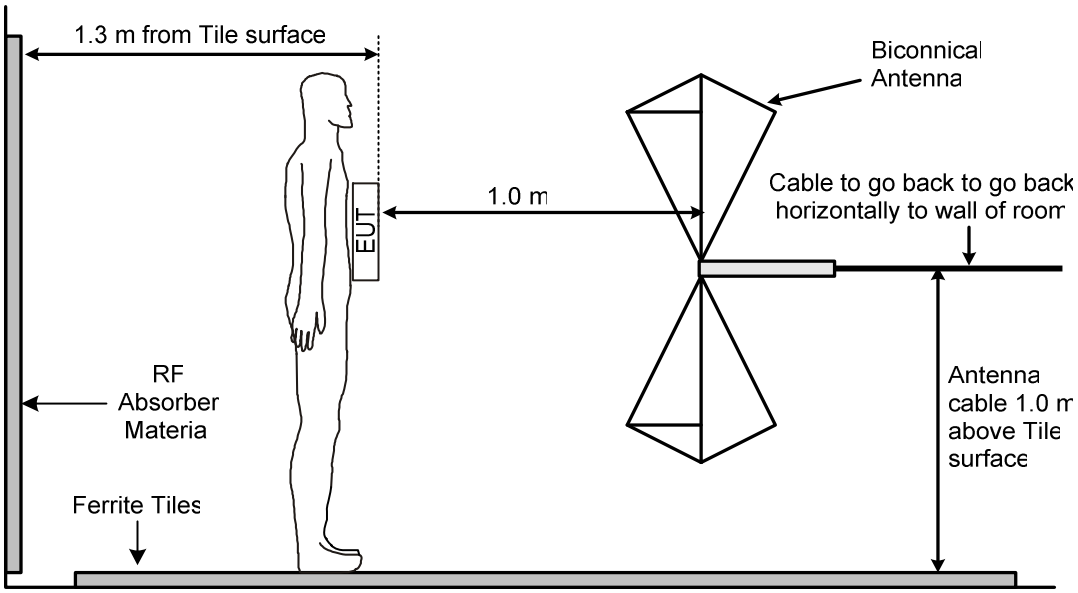

Figure NRE02.2-2 Typical Test Configuration Man Worn Scenario (88 MHz – 300 MHz)

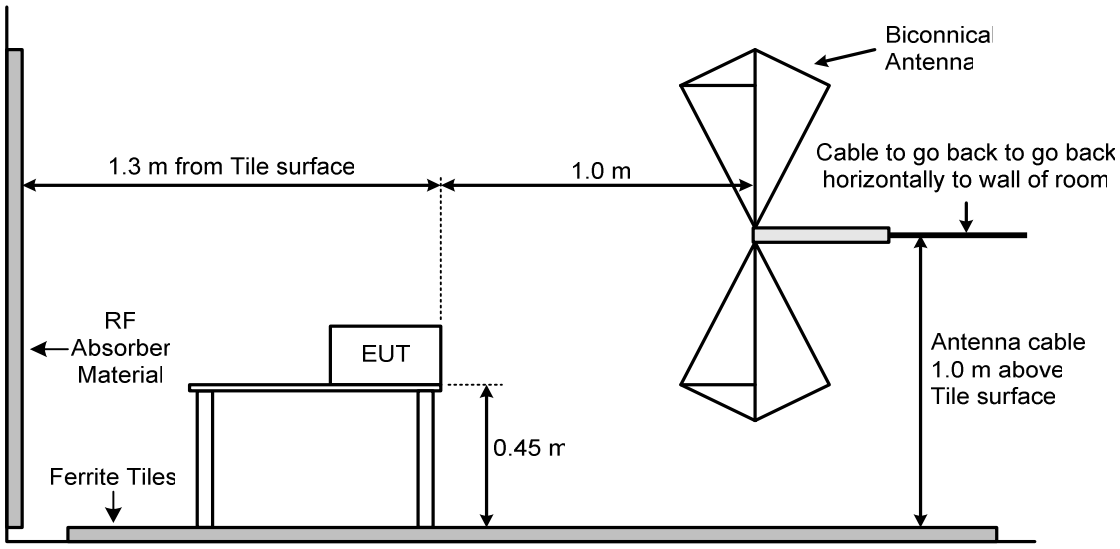

Figure NRE02.2-3 Typical Test Configuration Man Portable Scenario (88 MHz – 300 MHz)

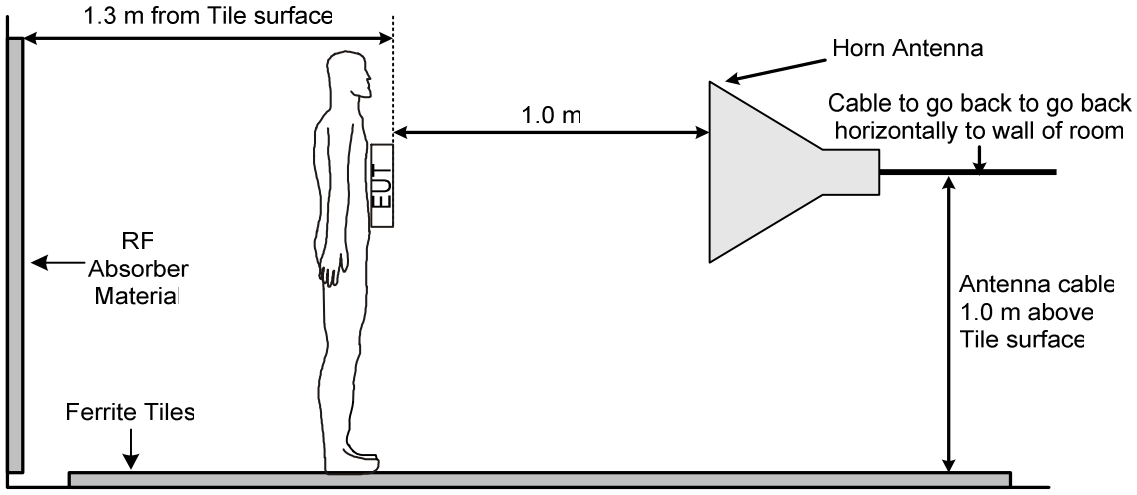

NOTE The Antenna may need to be angled downwards depending on the position of the EUT

Figure NRE02.2-4 Typical Test Configuration Man Worn Scenario (200 MHz to 18 GHz)

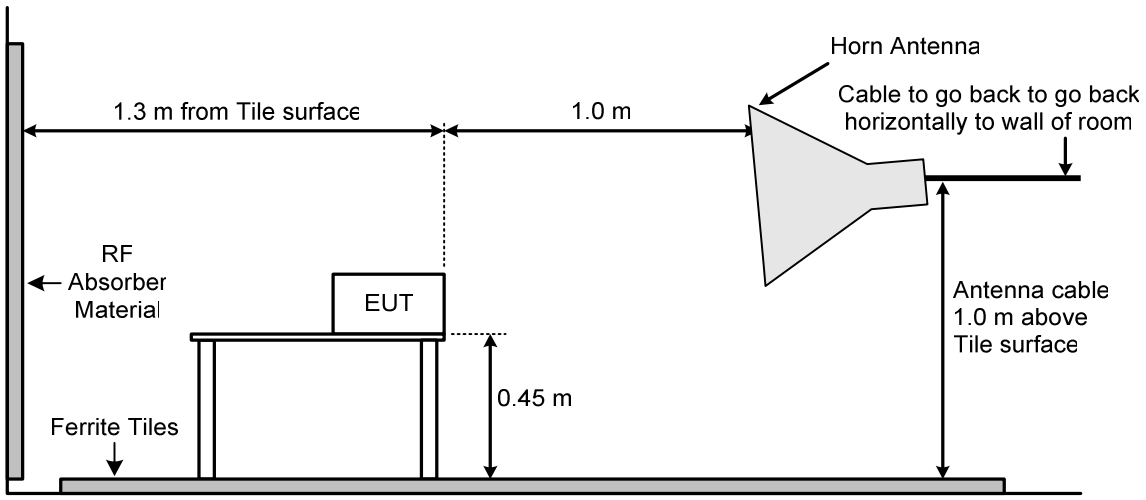

NOTE The Antenna may need to be angled downwards depending on the position of the EUT

Figure NRE02.2-5 Typical Test Configuration Man Portable Scenario (200 MHz to 18 GHz)

10.6 NRS01.2 Radiated Susceptibility Magnetic Field 500 Hz – 100 kHz

10.6.1 Applicability

This requirement is applicable to all EUTs including electrical cable interfaces. The requirement is not applicable for electromagnetic coupling via antennas. For an, EUT comprising a number of units, each unit with potentially sensitive components shall be tested individually. The interconnecting cables do not have to be subjected to this test.

Reference should also be made to **Clause 6.9**.

10.6.2 Limit

The EUT shall not exhibit any malfunction, degradation of performance, or deviation from specified indications, beyond the tolerances indicated in the individual equipment or subsystem specification, when subjected to the magnetic fields shown in **Figure NRS01.2-1** Limits for Man Worn Man Portable Land Based Equipment.

10.6.3 Test Procedures

10.6.3.1 Purpose

In order to achieve compatibility between modern equipments operating together limitations on emissions and susceptibility must be clearly defined. The levels of magnetic field related to both emissions and susceptibility have been derived from those already contained in other parts of this Standard. Since these levels are realistic, equipment should be designed to operate satisfactorily in this environment. It may be found impracticable to meet the susceptibility requirements for some equipment in which case if the distance is established at which the amplitude limit level is met for the equipment under test, segregation by that distance from other equipment may offer a realistic alternative.

10.6.3.2 Test Equipment

Test Equipment shall be as follows:

a. Signal Source

b. Radiating Loop having the following specifications

(1) Diameter: 12 cm

(2) Number of Turns: 20

(3) Wire: No. 12 Insulated Copper

(4) Magnetic Flux Density: 9.5x107 pT/ampere of applied current at a distance of 5 cm from the plane of the loop.

c. Loop sensor having the following specifications:

(1) Diameter: 4 cm

(2) Number of Turns: 51

(3) Wire: 7-41 Litz Wire (7 Strand, No. 41 AWG)

(4) Shielding: Electrostatic

(5) Correction Factor: See manufacturer's data for factors to convert measurement receiver readings to decibels above one picotesla (dBpT).

d. Measurement Receiver or Narrowband Voltmeter

e. Current Probe

10.6.3.3 Setup

The test setup shall be as follows:

a. Maintain the basic test setup for the EUT as shown in **Figures 502-1**.

b. Calibration. Configure the measurement equipment, radiating loop, and loop sensor as shown in **Figure NRS01-2**.

c. EUT Testing. Configure the test as shown in either **Figure NRS02-3** or **NRS02-4**.

d. Reference to **Clause, 4.3.8** is also required.

10.6.3.4 Procedures

The test procedures shall be as follows:

a. Turn on the measuring equipment and allow sufficient time for stabilisation.

b. Magnetic Field Calibration

(1) Set the signal source to a frequency of 1 kHz and adjust the output to provide a magnetic flux density of 110 dBpT as determined by the reading obtained on measurement receiver A and the relationship given in **Clause 10.6.3.2b(4)**.

(2) Measure the voltage output from the loop sensor using measurement receiver B.

(3) Verify that the output on measurement receiver B is within ±3 dB of the expected value based on the antenna factor and record this value.

(4) Reference to **Clauses, 4.3.4**, **4.3.10** and **4.11** is required.

Note: Where a 5 cm spacer forms part of the radiating loop it may be necessary to perform the calibration with the receiving loop on the opposite side of the one that has the spacer so that the correct separation distance is obtained.

c. EUT Testing

(1) Turn on the EUT and allow sufficient time for stabilisation.

(2) Select Test Frequencies as follows:

(a) Locate the loop sensor 5 cm from the EUT face or electrical interface connector being probed. Orient the plane of the loop sensor parallel to the EUT faces and parallel to the axis of connectors.

(b) Supply the loop with sufficient current to produce magnetic field strengths at least 10 dB greater than the applicable limit but not to exceed 15 amps (183 dBpT).

(c) Scan the applicable frequency range. Scan rates up to 3 times faster than the rates specified in **Table 3** of Category 501 are acceptable.

(d) If susceptibility is noted, select no less than three test frequencies per octave at those frequencies where the maximum indications of susceptibility are present.

(e) Reposition the loop successively to a location in each 30 by 30 cm area on each face of the EUT and at each electrical interface connector, and repeat **Clause 10.6.3.4.c(2)(c**) and **10.6.3.4.c(2)(d**) to determine locations and frequencies of susceptibility.

(f) From the total frequency data where susceptibility was noted in **Clause 10.6.3.4.c(2)(c)** through **10.6.3.4.c(2)(e)**, select 3 frequencies per octave over the applicable frequency range.

(3) At each frequency determined in **Clause 10.6.3.4.c(2)(f)** apply a current to the radiating loop that corresponds to the applicable limit. Move the loop to search for possible locations of susceptibility with particular attention given to the locations determined in **Clause 10.6.3.4.c(2)(e)** while maintaining the loop 5 cm from the EUT surface or connector. Verify that susceptibility is not present.

Note: Where individual EUT dimensions are less than 50 mm it is not necessary to perform the test on both opposing faces. If the Man Worn EUT dimensions are greater than 50mm, then the test shall be performed on the bench.

10.6.4 Data Presentation

Data presentation shall be as follows:

a. Provide tabular data showing verification of the calibration of the radiating loop in **Clause 10.6.3.4b**.

b. Provide tabular data, diagrams, or photographs showing the applicable test frequencies and locations determined in **Clauses 10.6.3.4.c(2)(e)** and **Clause 10.6.3.4.c(2)(f).**

c. Provide graphical or tabular data showing frequencies and threshold levels of susceptibility.

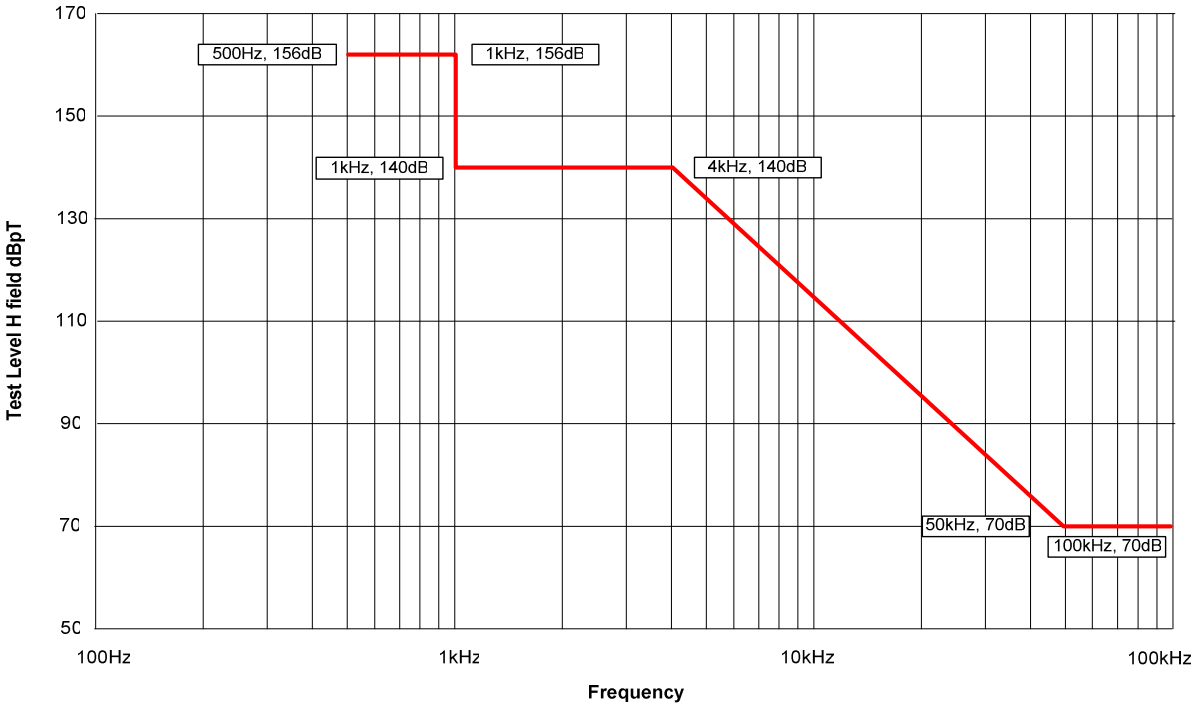

Figure NRS01.2-1 Limit for Man Worn / Man Portable Land Based Equipment

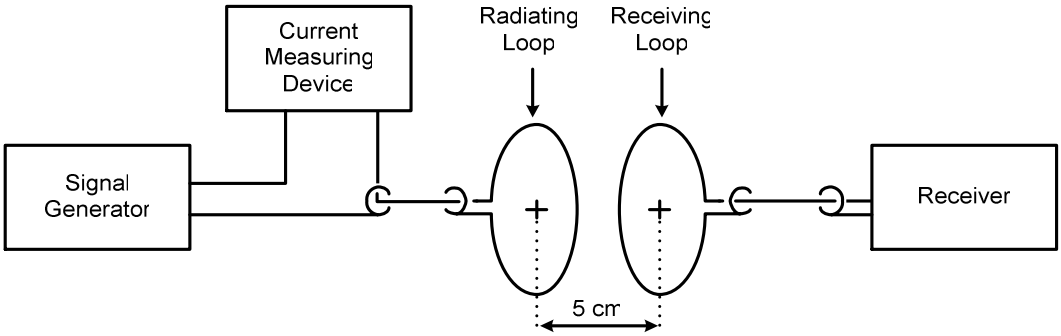

Figure NRS01.2-2 Typical Equipment Arrangement for Calibrating Magnetic Field Radiation

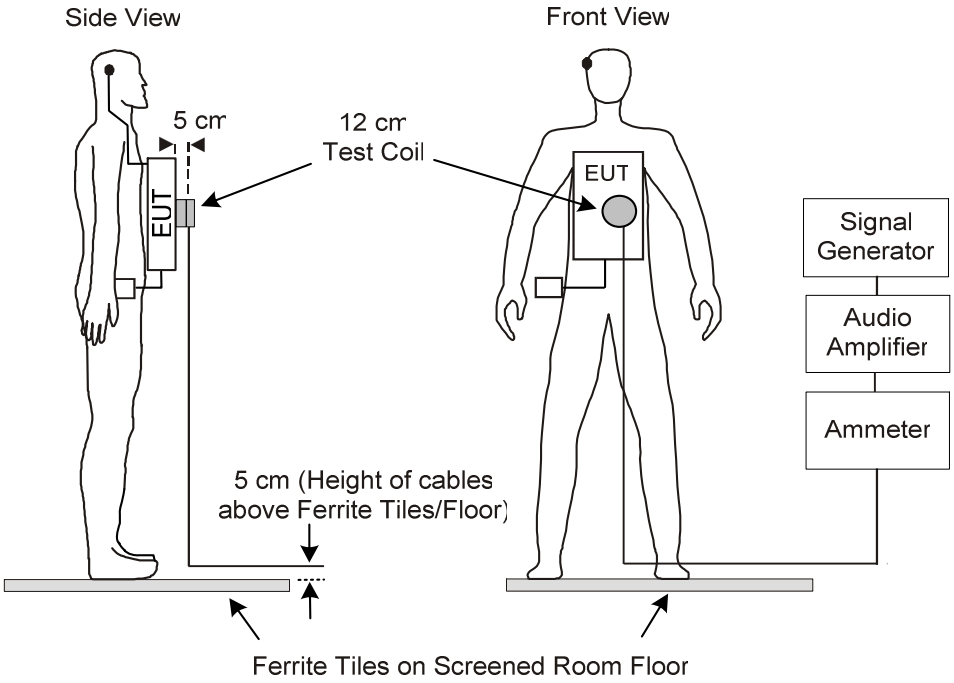

Figure NRS01.2-3 Typical Test Configuration Man Worn Scenario

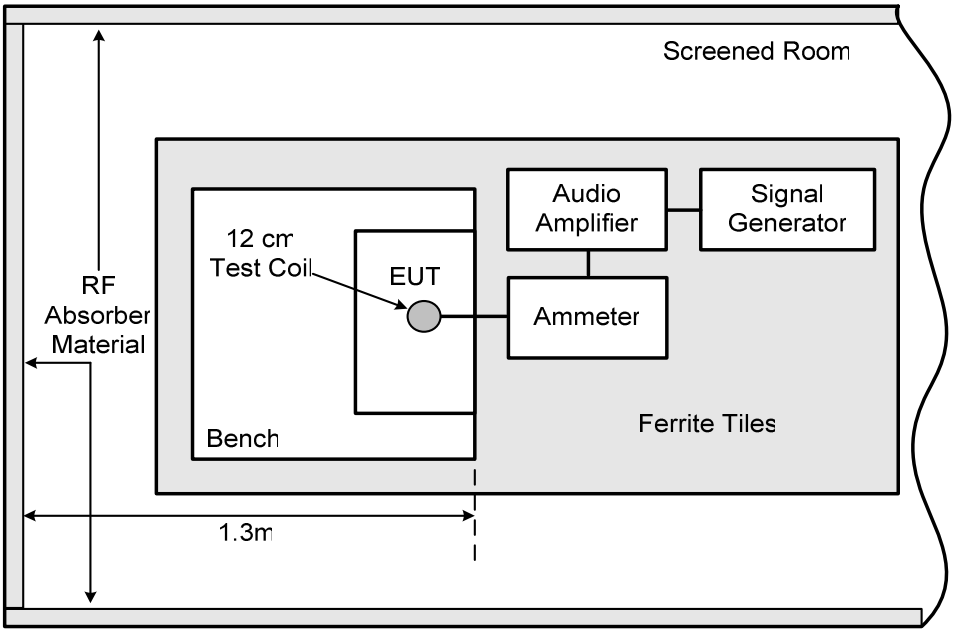

Figure NRS01.2-4 Typical Test Configuration Man Portable Scenario

10.7 NRS02.2 Radiated Susceptibility Electric Field 50 kHz – 18 GHz

10.7.1 Applicability

This requirement is applicable to all EUTs and all interconnecting cables.

Reference should also be made to **Clause 6.10**.

10.7.2 Limits

The EUT shall not exhibit any malfunction, degradation of performance, or deviation from specified indications, beyond the tolerances indicated in the individual equipment or subsystem specification, when subjected to the radiated electric fields limits shown in **Figure NRS02.2-1** for Man Worn, Man Portable Land Based Equipment and modulated as specified. Up to 30 MHz, the requirement shall be met for vertically polarised fields. Above 30 MHz, the requirement shall be met for both horizontally and vertically polarised fields. Circular polarised fields are not acceptable.

10.7.3 Test Procedures

10.7.3.1 Purpose

The purpose of this test is to confirm that the EUT will perform without malfunction when subject to high level RF fields from transmitting sources.

10.7.3.2 Test Equipment

The test equipment shall be as follows:

a. Signal Generators

b. Power Amplifiers

c. Receive Antennas

d. Transmit Antennas

e. Electric field sensors (physically small - electrically short)

f. Measurement Receiver

g. Power Meter

h. Directional Coupler

i. Attenuator

j. Data Recording Device

10.7.3.3 Setup

The test setup shall be as follows:

a. Maintain the basic test setup for the EUT as shown in **Figures 502-1**. Reference to **Clause, 4.3.8** is also required.

b. For electric field calibration, electric field sensors are required.

c. Calibration: Placement of electric field sensors. Position sensors 1 metre from and directly opposite the transmit antenna as shown in **Figures NRS02.2** through to **NRS02.2-7**.

d. EUT Testing. Placement of transmit antenna. Antennas shall be place 1 metre from the test setup boundary as follows:

(1) Centre the antenna(s) between the edges of the test setup boundary. The boundary includes all enclosures of the EUT and interconnecting cables.

(2) Maintain the placement of electric field sensors

10.7.3.4 Procedures

The test procedures shall be as follows:

a. Turn on the measurement equipment and EUT and allow a sufficient time for stabilisation.

b. Assess the test area for potential RF hazards and take necessary precautionary steps to assure safety of test personnel.

c. Calibration: Record the amplitude shown on the electric field sensor display unit due to EUT ambient. Reposition the sensor, as necessary, until this level is < 10% of the applicable field strength to be used for testing.

d. EUT Testing:

(1) Set the signal source to 1 kHz pulse modulation, 50% duty cycle, and using appropriate amplifier and transmit antenna, establish an electric field at the test start frequency. Gradually increase the electric field level until it reaches the applicable limit.

(2) Scan the required frequency ranges in accordance with the rates and duration's specified in **Table 501-3** of Category 501. Maintain field strength levels in accordance with the applicable limit. Monitor EUT performance for susceptibility effects.

(3) If susceptibility is noted, determine the threshold level in accordance with **Clause 4.3.10.4** and verify that it is above the limit.

(4) Perform testing over the required frequency range with the transmit antenna vertically polarised. Repeat the testing above 30 MHz with the transmit antenna horizontally polarised.

Note: Some NATO members may require additional modulation types applied over some or all of the frequency range tested. The Procuring Authority should be consulted with regard to other required modulations such as a pulse modulation of 1 µS width with a prf of 1kHz used to mimic the effect of co-located radar systems

10.7.4 Data Presentation

Data presentation shall be as follows:

a. Provide graphical or tabular data showing frequency ranges and field strength levels tested.

b. Provide the correction factors necessary to adjust sensor output readings for equivalent peak detection of modulated waveforms.

c. Provide graphs or tables listing any susceptibility thresholds that were determined along with their associated frequencies.

d. Provide diagrams or photographs showing actual equipment setup and the associated dimensions.

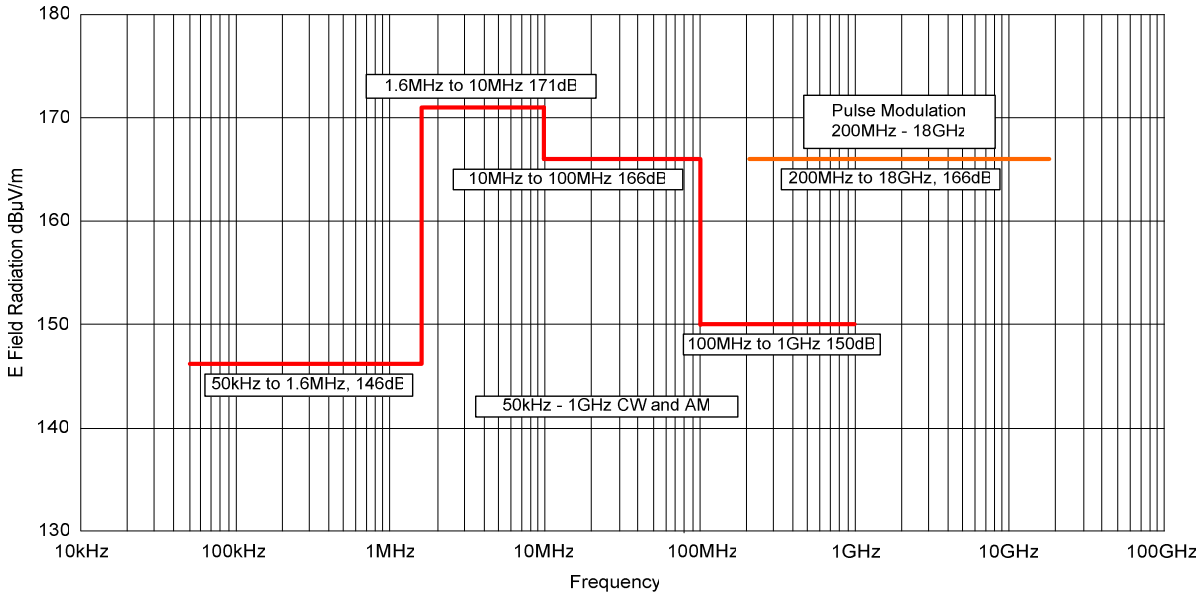

Figure NRS02.2-1 Limit for Man Worn / Man Portable Land Based Equipment

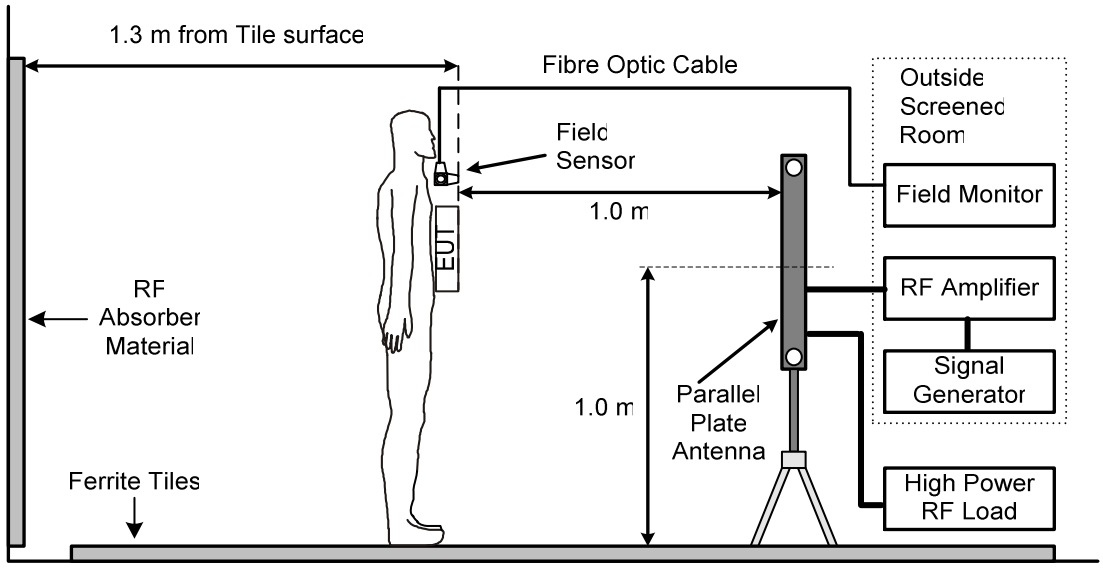

Note: Field Sensor should be placed 5 cm from the EUT

Figure NRS02.2-2 Typical Test Configuration Man Worn Scenario (50 kHz – 30 MHz)

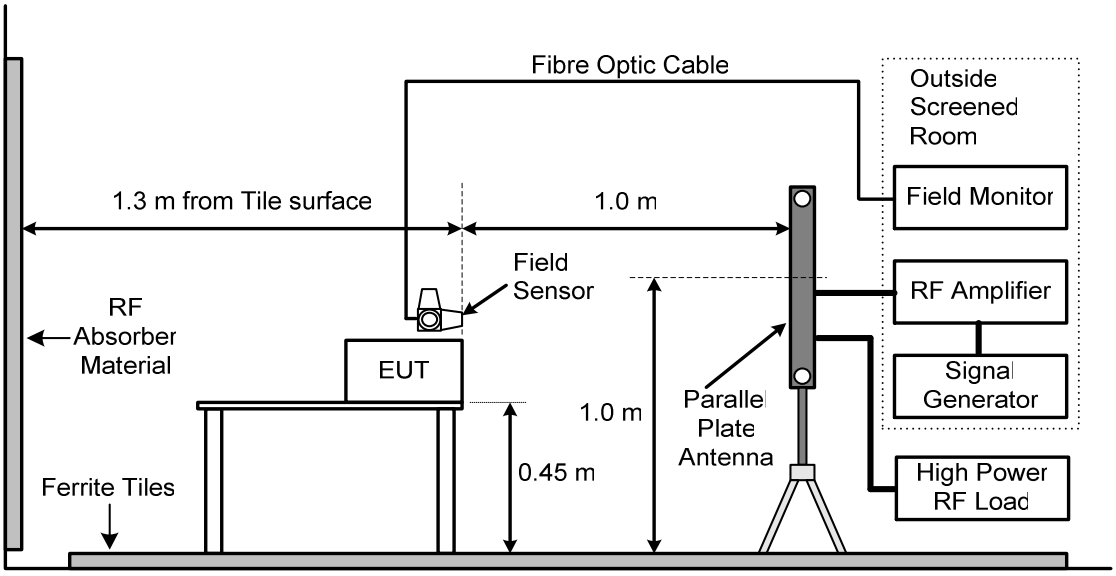

Note: Field Sensor should be placed 5 cm from the EUT

Figure NRS02.2-3 Typical Test Configuration Man Portable Scenario (50 kHz – 30 MHz)

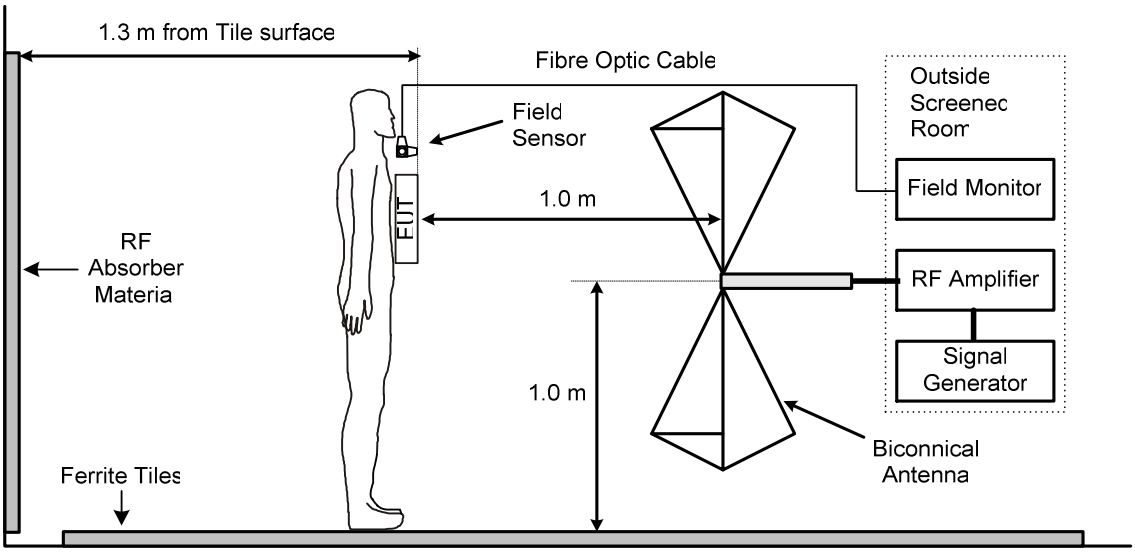

Note: Field Sensor should be placed 5 cm from the EUT

Figure NRS02.2-4 Typical Test Configuration Man Worn Scenario (30 MHz to 300 MHz)

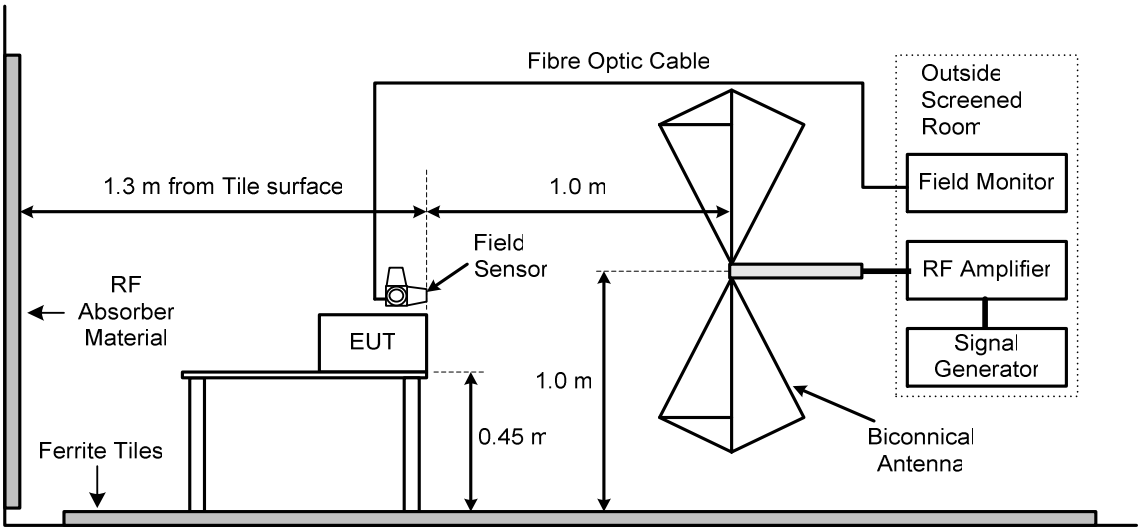

Note: Field Sensor should be placed 5 cm from the EUT

Figure NRS02.2-5 Typical Test Configuration Man Portable Scenario (30 MHz to 300 MHz)

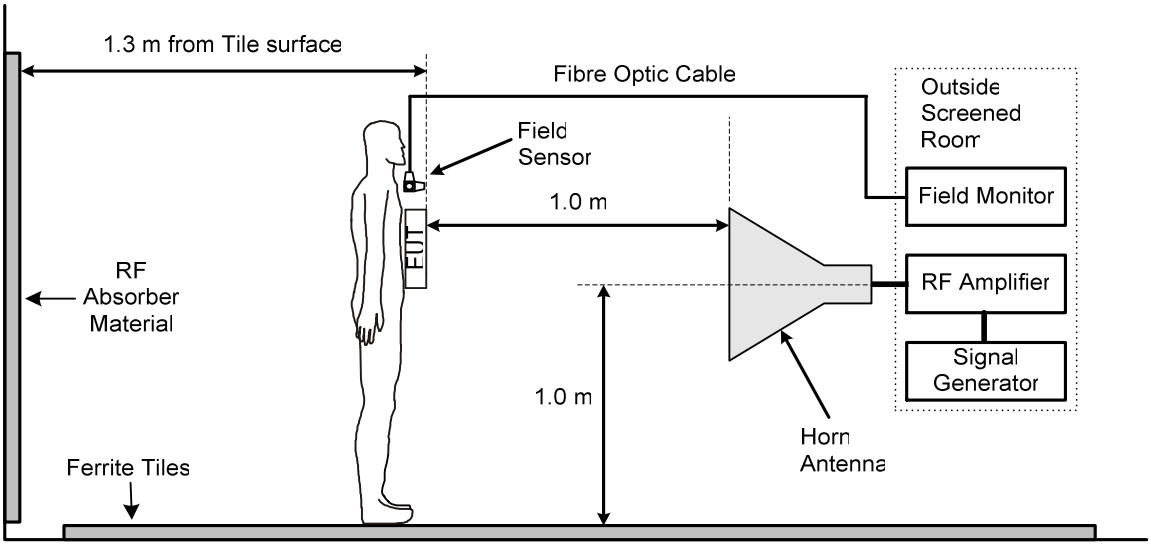

Note: Field Sensor should be placed 5 cm from the EUT

Note: The antenna may need to be angled upwards or downwards depending of position of EUT.

Figure NRS02.2-6 Typical Test Configuration Man Worn Scenario (200 MHz to 18 GHz)

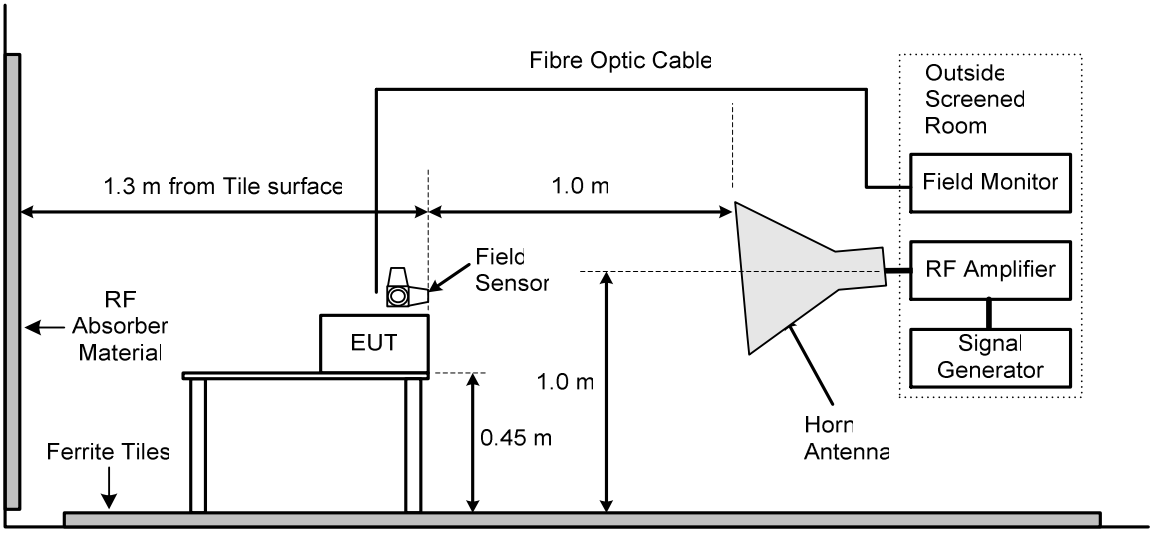

Note: Field Sensor should be placed 5 cm from the EUT

Note: The antenna may need to be angled downwards depending of the size of the EUT.

Figure NRS02.2-7 Typical Test Configuration Man Portable Scenario (200 MHz to 18 GHz)

CATEGORY 503

GROUND SUPPORT EQUIPMENT TEST PROCEDURES

1 AIM 503-3

2 BACKGROUND 503-3

3 AEROSPACE GROUND SUPPORT EQUIPMENT (AGE) CATEGORIES 503-3

3.1 Category E1 503-3
3.2 Category E2 503-3
3.3 Category E3 503-4

4 LAND SERVICE SUPPORT EQUIPMENT 503-4

5 SEA SERVICE SUPPORT EQUIPMENT 503-5

6 GENERAL PURPOSE SUPPORT EQUIPMENT 503-6

7 AEROSPACE GROUND SUPPORT EQUIPMENT (AGE) TYPES 503-6

7.1 Type AGE I 503-6
7.2 Type AGE II 503-6

8 SELECTION OF LIMITS 503-6

8.1 Air 503-6
8.2 Land 503-11
8.3 Sea 503-12
8.4 General Purpose Support Equipment 503-16

9 APPLICABLE DOCUMENTS 503-16

10 ACRONYMS 503-16

11 DEFINITIONS 503-16

ANNEX A CIVIL EMC TEST REQUIREMENTS 503-A1

TABLES

Table 503-1 Category E1 AGE used On Aircraft 503-7

Table 503-2 Category E1 AGE used Off the Aircraft On the Flight Line 503-8

Table 503-3 Category E2 AGE 503-9

Table 503-4 Category E3 AGE 503-10

Table 503-5 **Land Equipment used in the Field** **503-11**

Table 503-6 **Sea Equipment used in the Above Deck Environment** **503-12**

Table 503-7 **Sea Equipment used in the Below Deck Environment** **503-13**

Table 503-8 **Sea Equipment Non Essential to Float, Move or Flight** **503-14**

Table 503-9 **Land Based Sea Support Equipment** **503-15**

CATEGORY 503

Ground Support Equipment Test Procedures

1 AIM

The primary aim of this category is to foster international co-operation and commonality between participating nations concerning the control of electromagnetic interference (both emission and susceptibility characteristics) of Ground Support Equipment across all 3 services (Air Land and Sea).

This document establishes the minimum test methods to be applied in the evaluation of Ground Support Equipment Electromagnetic Compatibility (EMC)

2 BACKGROUND

All three Services may have a requirement to procure support equipment for use in areas where the need for (and consequent cost of) the stringent EMC measures described in Categories 501 and 502 is not warranted.

In some scenarios the support equipment should be tested using the test methods in Categories 501 and 502. In other cases the applicable current statutory EMC requirements may be suitable, for example, compliance with the European EMC Directive, or ISO Standards but the likely proximity of mobile military transmitters needs to be considered.

The selection of standards will be dependent on the support equipment environment. Support equipment is categorised below and in the various Tables in **Clause 8**.

3 AEROSPACE GROUND SUPPORT EQUIPMENT (AGE) CATEGORIES

AGE EMC requirements are defined for three categories of equipment as determined by criticality

3.1 Category E1

This is where the aircraft is powered and the AGE is categorized as Safety/Mission Critical Related or Directly Interfaced with the Aircraft. Any AGE shall be categorised in this group if any one of the following criteria are met.

a. A defect mode of the AGE could result in a hazardous situation which would compromise the safety of the aircraft.

b. A defect mode of the AGE could result in a situation which would cause the abandonment or curtailment of the mission, from initialisation of engine start to engine shutdown after flight.

c. The AGE downloads flight safety or mission critical functions of the aircraft via a direct interface.

d. The AGE tests flight safety or mission critical functions of the aircraft.

e. The AGE is electrically interfaced with the aircraft.

3.2 Category E2

This is where the AGE is not electrically interfaced but used in close proximity and is categorized as Non Safety/Mission Critical AGE. Any AGE shall be categorised in this group if any one of the following are met.

a. The AGE may be operated in close proximity to the aircraft, i.e. on the Flight Line, but is not directly interfaced to the aircraft.

b. The AGE may be operated within a Hardened Aircraft Shelter (HAS).

Note: If the AGE is directly interfaced with the aircraft then category E1 shall apply.

3.3 Category E3

This is where the AGE (Maintenance Levels 2 & 3) is used off aircraft and off the flight line. Any AGE which is not categorised as E1 or E2 shall be categorised in this group.

4 LAND SERVICE SUPPORT EQUIPMENT

The requirements for Land (Army) equipment are normally dominated by the need to protect the receiver sensitivity of communication transceivers against unwanted in-band emissions from nearby emissions or equipment sources. In many operational scenarios these transceivers are both man-carried and vehicle-borne in large numbers. Equally on the battlefield these associated transmitters are often the strongest source of electromagnetic fields irradiating potentially susceptible equipment. The physical separation between the subject equipment and the nearest antenna is thus an important factor governing undesirable coupling effects accordingly limits are classified in terms of this separation.

Support equipment used in the field (1st and 2nd line maintenance) requirements is determined according the Land services equipment classifications:

a. Class A: These are the most stringent limits applying to equipment which must operate at a distance of less than 2 metres from the nearest RF antenna and where there is no scope for increasing that separation.

b. Class B Applicable to equipment which is to operate between 2 m and 15 m from the nearest antenna. This Class includes equipment which may be sited closer to such an antenna but is simple and operationally acceptable to move away e.g. a vehicle which is not itself equipped with radio but may be sited next to another which is so equipped.

c. Class C Applicable to equipment, which is to operate between 15 and 100 m from the nearest antenna.

d. Class D Applicable to equipment, which is to operate at more than 100 m from the nearest antenna. This classification includes:

   1. Equipment which would normally be subject to Class B or Class C limits but is electro-magnetically screened to give a shielding equivalent to a separation of at least 100 m from the nearest antenna.

   2. When commercial equipment that is intended for use only in non-operational areas complies with current statutory EMC requirements (e.g. the EC EMC Directive) it may, at the discretion of the Project Manager, be exempted from further testing.

Support equipment used in maintenance and repair facilities (3rd line maintenance) fall into two sub-categories defined as:

1. Repair facilities and workshops.

2. Protected installations.

5 SEA SERVICE SUPPORT EQUIPMENT

The requirements are defined for categories of equipment as determined by location.

a. Above Decks Support Equipment

1. Support equipment is designated ‘Above Decks’ where:

   2. It is to be used on the exposed upper deck of a surface ship.

   3. It is to be used in compartments on non-metallic ships (except where use is restricted to specialist screened rooms on such ships).

   4. It is used in areas or compartments, such as the bridge and hangar that have openings to the upper deck and are not afforded notable levels of attenuation to electromagnetic field by the structure of the ship.

   5. It is used in the space between the pressure hull and outer casing of a submarine, or on deck when surfaced.

b. Below Decks Support Equipment

   1. Support equipment is designated ‘Below Decks’ where:

   2. It is to be used in areas that are surrounded by an enclosed metallic structure which provides significant attenuation to electromagnetic radiation.

   3. It is located within the pressure hull of submarines.

      In below deck locations other than the following compartments, electric field strengths are unlikely to exceed 3 V/m unless equipment is installed within 1 metre of operating arc welders, mobile phones, mobile radios and electric generators:

      i) Wireless Telegraphy Office

      ii) Operations Room

      iii). Computer Room

      iv) Bridge / Control Room

      v) Sonar Cabinet Space and Navigation Radar Suite

      vi) Propulsion Room

      vii) Manoeuvring Room

      viii) Machinery Control Centre

c. Land Based Sea Services Support Equipment

   Support equipment is sub categorised into:

   1. On-board ship dockside:

      i) Alongside – transmitters and radar potentially operational; major systems operational.

      ii) Laid up – transmitters and radar powered down; all major systems powered down.

   2. Test and integration facility.

   3. Maintenance and repair facilities and workshops.

6 GENERAL PURPOSE SUPPORT EQUIPMENT

General Purpose Support Equipment (GPSE) is equipment used across all three services. GPSE includes COTS and special to type equipment. EMC requirements apply according to the above categories. When used in 3rd line maintenance applications, or in conjunction with adequate additional protection, compliance with European harmonised EMC standards is acceptable.

7 AEROSPACE GROUND SUPPORT EQUIPMENT (AGE) TYPES

7.1 Type AGE I

AGE fitted with active electronic components i.e. non-linear items such as transistors or integrated circuits etc.

7.2 Type AGE II

AGE which contains motors, generators, relays, solenoids, transformers and electromechanical selectors etc. and does not contain active electronic components.

8 SELECTION OF LIMITS

The following limits apply to the categories of support equipment listed in **Clauses 3**, **4**, **5** and **6.**

8.1 Air

8.1.1 AGE Category E1

Table 503-1 defines the minimum test requirements to be applied to Category E1 AGE intended for use On Aircraft whilst on the ground

Test Method	AGE Type		Description	Comment
	I	II		
NCE01	Y(Note 1)	Y(Note 1)	Conducted Emissions, Power Leads, 30 Hz – 10 kHz	Not applicable for Self Powered AGE
NCE02	Y(Note 1)	Y(Note 1)	Conducted Emissions, Power Leads, 10 kHz – 10 MHz	Not applicable for Self Powered AGE
NCE04	Y	Y	Exported Transients Primary Power Lines	Not applicable for Self Powered AGE
NCE05	Y	Y	Conducted Emissions, 30 Hz – 100 MHz, Control and Signal Cables	
NCS01	Y(Note 1)	N	Conducted Susceptibility Power Leads, 30 Hz – 150 kHz	Not applicable for Self Powered AGE
NCS07	Y	N	Conducted Susceptibility Bulk Cable Injection, 10 kHz – 200 MHz, Power, Control and Signal Cables	
NCS08	Y	N	Conducted Susceptibility Bulk cable Injection, Impulse Excitation	
NCS09	Y(Note 2)	Y(Note 2)	Conducted Susceptibility Damped Sinusoidal Transients, Power, Control and Signal Cables and Power Leads, 10 kHz to 100 MHz	
NCS12	Y	N	Conducted Susceptibility Electrostatic Discharge	Alternative Standard IEC 61000-4-2
NRE02	Y	Y	Radiated Emissions, 2 MHz – 18 GHz, Electric Field	
NRS01	Y	Y	Radiated Susceptibility, Magnetic Field, 30 Hz to 100 kHz	
NRS02	Y(Note 3)	N	Radiated Susceptibility, 30 MHz – 40 GHz, Electric Field	Alternative Reverberation Chamber Test Method can also be used
Civil Power Line Test	Y(Note 4)	Y(Note 4)	Conducted Emission and Immunity	

Note 1: Not applicable for AGE powered from domestic power supply distribution systems.

Note 2: Limited applicability: Power Lead injection requirement not applicable for Self Powered AGE or AGE powered from domestic power supply distribution systems.

Note 3: Pulse modulation of 30 µs pulse width and 1 kHz pulse repetition frequency shall additionally be applied at frequencies above 1 GHz

Note 4: Applicable for AGE powered from domestic power supply distribution systems. AGE shall comply with the conducted emission and immunity test requirements of the IEC or European Harmonised EMC standards defined in Annex A

Table 503-1 Category E1 AGE used On Aircraft

Table 503-2 defines the minimum test requirement to be applied to Category E1 AGE intended for use Off Aircraft, On the Flight Line.

Test Method	AGE Type		Description	Comment
	I	II		
NCE01	Y(Note 1)	Y(Note 1)	Conducted Emissions, Power Leads, 30 Hz – 10 kHz	Not applicable for Self Powered AGE
NCE02	Y(Note 1)	Y(Note 1)	Conducted Emissions, Power Leads, 10 kHz – 10 MHz	Not applicable for Self Powered AGE
NCE04	Y	Y	Exported Transients Primary Power Lines	Not applicable for Self Powered AGE
NCE05	Y	Y	Conducted Emissions, 30 Hz – 100 MHz, Control and Signal Cables	
NCS01	Y(Note 1)	N	Conducted Susceptibility Power Leads, 30 Hz – 150 kHz	Not applicable for Self Powered AGE
NCS07	Y	N	Conducted Susceptibility Bulk Cable Injection, 10 kHz – 200 MHz, Power, Control and Signal Cables	
NCS09	Y(Note 2)	Y(Note 2)	Conducted Susceptibility Damped Sinusoidal Transients, Power, Control and Signal Cables and Power Leads, 10 kHz to 100 MHz	
NCS12	Y	N	Conducted Susceptibility Electrostatic Discharge	Alternative Standard IEC 61000-4-2
NRE02	Y	Y	Radiated Emissions, 2 MHz – 18 GHz, Electric Field	
NRS01	Y	Y	Radiated Susceptibility, Magnetic Field, 30 Hz to 100 kHz	
NRS02	Y(Note 3)	N	Radiated Susceptibility, 30 MHz – 40 GHz, Electric Field	Alternative Reverberation Chamber Test Method can also be used
Civil Power Line Test	Y(Note 4)	Y(Note 4)	Conducted Emission and Immunity	

Note 1: Not applicable for AGE powered from domestic power supply distribution systems.

Note 2: Limited applicability: Power Lead injection requirement not applicable for Self Powered AGE or AGE powered from domestic power supply distribution systems.

Note 3: Pulse modulation of 30 µs pulse width and 1 kHz pulse repetition frequency shall additionally be applied at frequencies above 1 GHz

Note 4: Applicable for AGE powered from domestic power supply distribution systems. AGE shall comply with the conducted emission and immunity test requirements of the IEC or European Harmonised EMC standards defined in Annex A

Table 503-2 Category E1 AGE used Off the Aircraft On the Flight Line

8.1.2 AGE Category E2

Table 503-3 defines the minimum test requirement to be applied to Category E2 AGE. All test methods encompassed by referenced civil EMC standards shall be performed.

Category E2 AGE may alternatively be subject to the minimum test requirement of Table 503-2.

Test Requirement	AGE Type		Description	Comment
	I	II		
IEC 61000-6-4	Y	Y	Electromagnetic Compatibility (EMC) – Part 6-4: Generic standards – Emission standard for industrial environments	Alternative Standard EN 61000-6-4I
IEC 61000-6-2	Y	Y	Electromagnetic Compatibility (EMC) – Part 6-2: Generic standards – Immunity for industrial environments	Alternative Standard EN 61000-6-2
IEC 61000-3-2	Y(Note 1)	Y(Note 1)	Electromagnetic compatibility (EMC) – Part 3-2: Limits – Limits for harmonic current emissions (equipment input current up to and including 16 A per phase)	Alternative Standard EN 61000-3-2
IEC 61000-3-3	Y(Note 1)	Y(Note 1)	Electromagnetic compatibility (EMC) – Part 3: Limits – Section 3: Limitation of voltage changes, voltage fluctuations and flicker in public low-voltage supply systems, for equipment with rated current ≤16 A per phase and not subject to conditional connection	Alternative Standard EN 61000-3-3
NCS12	Y	N	Conducted Susceptibility Electrostatic Discharge	Alternative Standard IEC 61000-4-2
NRE02	Y(Note 2)	Y(Note 2)	Radiated Emissions 2 MHz – 18 GHz, Electric Field	
NRS02	Y(Note 3)	N	Radiated Immunity 30 MHz – 40 GHz, Electric Field	Limited Applicability Alternative Reverberation Chamber Test Method can also be used

Note 1: Applicability defined by Civil EMC standard

Note 2: Applicable where AGE use is likely to be concurrent with Aircraft sensitive receiver testing or operation

Note 3: Limited Applicability: Applicable in the frequency band 1 GHz to 18 GHz where AGE is likely to be exposed to radar fields. Pulse modulation of 30 µs pulse width and 1 kHz pulse repetition frequency shall be applied

Table 503-3 Category E2 AGE

8.1.3 AGE Category E3

Table 503-4 defines the minimum test requirement to be applied to Category E3 AGE. All test methods encompassed by referenced civil EMC standards shall be performed.

Test Requirement	AGE Type		Description	Comment
	I	II		
IEC 61000-6-4	Y	Y	Electromagnetic Compatibility (EMC) – Part 6-4: Generic standards – Emission standard for industrial environments	Alternative Standard EN 61000-6-4
IEC 61000-6-2	Y	Y	Electromagnetic Compatibility (EMC) – Part 6-2: Generic standards – Immunity for industrial environments	Alternative Standard EN 61000-6-2
IEC 61000-3-2	Y(Note 1)	Y(Note 1)	Electromagnetic compatibility (EMC) – Part 3-2: Limits – Limits for harmonic current emissions (equipment input current up to and including 16 A per phase)	Alternative Standard EN 61000-3-2
IEC 61000-3-3	Y(Note 1)	Y(Note 1)	Electromagnetic compatibility (EMC) – Part 3: Limits – Section 3: Limitation of voltage changes, voltage fluctuations and flicker in public low-voltage supply systems, for equipment with rated current ≤16 A per phase and not subject to conditional connection	Alternative Standard EN 61000-3-3
NCS12	Y	N	Conducted Susceptibility Electrostatic Discharge	Alternative Standard IEC 61000-4-2
NRS02	Y(Note 2)	N	Radiated Susceptibility 30 MHz – 40 GHz, Electric Field	Limited Applicability Alternative Reverberation Chamber Test Method can also be used

Note 1: Applicability defined by civil EMC standard

Note 2: Limited Applicability: Applicable in the frequency band 1 GHz to 18 GHz where AGE is likely to be exposed to radar fields. Pulse modulation of 30 µs pulse width and 1 kHz pulse repetition frequency shall be applied

Table 503-4 Category E3 AGE

8.2 Land

Table 503-5 describes the minimum test requirements to be used in the Field (1st and 2nd Line Maintenance).

For the minimum test requirements to be used in maintenance and repair facilities i.e. 3rd Line Maintenance Application refer to EU Standards as specified in the OJEC or IEC Standards.

Test Requirement	Description	Comment
NCE02	Conducted Emissions, Power Leads, 10 kHz – 10 MHz	
NCE04	Exported Transients Primary Power Lines	
NCE05	Conducted Emissions, 500 Hz – 150 MHz, Control and Signal Cables	
NCS01	Conducted Susceptibility Power Leads, 30 Hz – 150 kHz	
NCS02	Conducted Susceptibility Control and Signal Leads, 30 Hz – 150 kHz	
NCS07	Conducted Susceptibility Bulk Current Injection, 10 kHz – 2000 MHz	
NCS09	Conducted Susceptibility Damped Sinusoidal Transients Cables and Power Leads, 10 kHz – 100 MHz	
NCS12	Conducted Susceptibility Electrostatic Discharge	
NRE01	Radiated Emissions Magnetic Fields 30 Hz – 100 kHz	
NRE02	Radiated Emissions, 10 kHz – 18 GHz, Electric Field	
NRS01	Radiated Susceptibility, Magnetic Field, 30 Hz - 100 kHz	
NRS02	Radiated Susceptibility, 50 kHz – 40 GHz, Electric Field	

Table 503-5 Land Equipment used in the Field

8.3 Sea

Table 503-6 describes the minimum test requirements to be used for the Above Deck Environment as defined in **Clause 5a**.

Test Requirement	Description	Comment
NCE04	Exported Transients Primary Power Lines	
NCE05	Conducted Emissions, 30 Hz – 100 MHz, Power, Control and Signal Cables	
NCS01	Conducted Susceptibility Power Leads, 30 Hz – 150 kHz	
NCS02	Conducted Susceptibility Control and Signal Cables, 20 Hz to 50 kHz	
NCS07	Conducted Susceptibility Bulk Cable Injection, 4 kHz – 200 MHz, Power, Control and Signal Cables	
NCS09	Conducted Susceptibility Damped Sinusoidal Transients, Power, Control and Signal Cables and Power Leads, 1 kHz to 100 MHz	
NCS11	Conducted Susceptibility Imported Low Frequency on Power Leads (Ships)	
NCS12	Conducted Susceptibility Electrostatic Discharge	
NRE01	Radiated Emissions, 30 Hz – 100 KHz, Magnetic Field	
NRE02	Radiated Emissions, 10 kHz – 18 GHz, Electric Field	
NRS01	Radiated Susceptibility 30 Hz – 100 kHz, Magnetic Field	
NRS02	Radiated Susceptibility 50 kHz – 40 GHz, Electric Field	
NRS04	Radiated Susceptibility Magnetic Field (DC)	

Table 503-6 Sea Equipment used in the Above Deck Environment

Table 503-7 describes the minimum test requirements to be used in the Below Deck Environment.

Test Requirement	Description	Comment
NCE04	Exported Transients Primary Power Lines	
NCE05	Conducted Emissions, 30 Hz – 100 MHz, Power, Control and Signal Cables	
NCS01	Conducted Susceptibility Power Leads, 30 Hz – 150 kHz	
NCS02	Conducted Susceptibility Control and Signal Cables, 20 Hz to 50 kHz	
NCS07	Conducted Susceptibility Bulk Cable Injection, 4 kHz – 200 MHz, Power, Control and Signal Cables	
NCS09	Conducted Susceptibility Damped Sinusoidal Transients, Power, Control and Signal Cables and Power Leads, 1 kHz to 100 MHz	
NCS11	Conducted Susceptibility Imported Low Frequency on Power Leads (Ships)	
NCS12	Conducted Susceptibility Electrostatic Discharge	
NRE01	Radiated Emissions, 30 Hz – 100 KHz, Magnetic Field	
NRE02	Radiated Emissions, 2 MHz – 18 GHz, Electric Field	
NRS01	Radiated Susceptibility 30 Hz – 100 kHz, Magnetic Field	
NRS02	Radiated Immunity 50 MHz – 40 GHz, Electric Field	
NRS04	Radiated Susceptibility Magnetic Field (DC)	

Table 503-7 Sea Equipment used in the Below Deck Environment

Table 503-8 describes the minimum test requirements to be used in the sea Below Deck Environment Non Essential to 'Float, Move or Flight'.

Test Requirement	Description	Comment
NCE04	Exported Transients Primary Power Lines	
NCE05	Conducted Emissions, 30 Hz – 100 MHz, Power, Control and Signal Cables	
NCS01	Conducted Susceptibility Power Leads, 30 Hz – 150 kHz	
NCS07	Conducted Susceptibility Bulk Cable Injection, 10 kHz – 200 MHz, Power, Control and Signal Cables	
NCS09	Conducted Susceptibility Damped Sinusoidal Transients, Power, Control and Signal Cables and Power Leads, 10 kHz to 100 MHz	
NCS11	Conducted Susceptibility Imported Low Frequency on Power Leads (Ships)	
NCS12	Conducted Susceptibility Electrostatic Discharge	
NRE01	Radiated Emissions, 30 Hz – 100 KHz, Magnetic Field	
NRE02	Radiated Emissions, 2 MHz – 18 GHz, Electric Field	
Compliance with relevant EU std as specified in the OJEC)		

Table 503-8 Sea Equipment Non Essential to Float, Move or Flight

Table 503-9 describes the minimum test requirements to be used for Sea Land Based Support Equipment.

Test Requirement	Description	Comment
NCE04	Exported Transients Primary Power Lines	
NCE05	Conducted Emissions, 30 Hz – 100 MHz, Power, Control and Signal Cables	
NCS01	Conducted Susceptibility Power Leads, 30 Hz – 150 kHz	
NCS02	Conducted Susceptibility Control and Signal Cables, 30 Hz to 50 kHz	Optional for EUT with Low LF or Audio System
NCS07	Conducted Susceptibility Bulk Cable Injection, 10 kHz – 200 MHz, Power, Control and Signal Cables	
NCS09	Conducted Susceptibility Damped Sinusoidal Transients, Power, Control and Signal Cables and Power Leads, 10 kHz to 100 MHz	
NCS12	Conducted Susceptibility Electrostatic Discharge	
NRE01	Radiated Emissions, 30 Hz – 100 KHz, Magnetic Field	
NRE02	Radiated Emissions, 2 MHz – 18 GHz, Electric Field	
NRS02	Radiated Immunity 30 MHz – 40 GHz, Electric Field	

Table 503-9 Land Based Sea Support Equipment

8.4 General Purpose Support Equipment

For 3rd Line Maintenance Application refer to EU Standards as specified in the OJEC or IEC Standards.

9 APPLICABLE DOCUMENTS

10 ACRONYMS

The following acronyms used in this leaflet are:

AGE Aerospace Ground Support Equipment

COTS Commercial Off The Shelf

EMC Electromagnetic Compatibility

GPSE General Purpose Support Equipment

HAS Hardened Aircraft Shelter

OJEC Official Journal of the European Union

11 DEFINITIONS

Above Deck

In the domain of electromagnetic environment effects, an area on ships which is directly exposed to the external electromagnetic environment.

Below Deck

In the domain of electromagnetic environment effects, an area on ships which is generally metallic, or an area which provides an equivalent attenuation to electromagnetic radiation.

Mission Critical

A characteristic or function of an equipment or system in which a failure can cause the task or operation demanded from the materiel to be abandoned or severely impaired.

Safety Critical

A characteristic or function of an equipment or system in which a failure or malfunction may cause a direct hazard to personnel and/or loss of materiel.

ANNEX A

CIVIL EMC TEST REQUIREMENTS

A.1 Civil Power Line Test

The following Civil EMC Standards apply in accordance with Note 4 in Tables 503-1 and 503-2.

A.1.1 EN 61000-6-4: Electromagnetic Compatibility (EMC)

Part 6-4: Generic Standards – Emission standard for industrial environments

Test method:

a. Conducted Emission AC Power Port
b. Radiated Emission Enclosure

A.1.2 EN 61000-6-2: Electromagnetic Compatibility (EMC)

Part 6-2: Generic Standards – Immunity for Industrial Environments

Consideration shall be given to the specification of 'Performance Criterion' as defined by the standard.

Test method

a. Conducted Immunity Radio Frequency, Common Mode: Power and Signal Ports
b. Fast Burst Transients: Power and Signal Ports
c. Surges: Power and Signal Ports
d. Voltage Dips: Primary Power Port
e. Voltage Interruptions: Primary Power Port
f. Power Frequency Magnetic Field: Enclosure
g. Radio Frequency Amplitude Modulated Electromagnetic Field: Enclosure
h. Electrostatic Discharge (ESD): Enclosure

Cable Length and Applicability Criteria Apply.

A.1.3 EN 61000-3-2 Electromagnetic compatibility (EMC)

Part 3-2: Limits – Limits for Harmonic Current Emissions (equipment input current up to and including 16 A per phase)

Test method:

a. Harmonic Current Measurement: Primary Power Port

A.1.4 EN 61000-3-3 Electromagnetic compatibility (EMC)

Part 3: Limits – Section 3: Limitation of Voltage Changes, Voltage Fluctuations and Flicker in public low-voltage supply systems, for equipment with rated current ≤16 A per phase and not subject to conditional connection

Test Method:

a. Voltage fluctuation measurement: primary power port

CATEGORY 504

INTRODUCTION TO PLATFORM AND SYSTEM VERIFICATION AND TESTS

1 INTRODUCTION 504-2

2 TERMS AND DEFINITIONS 504-2

3 ORDER OF PRECEDENCE 504-2

3.1 General 504-2
3.2 Electromagnetic Compatibility Advisory Board (EMCAB) 504-2

4 DETAILED REQUIREMENTS 504-2

4.1 Margins 504-2
4.2 Intra-System Electromagnetic Compatibility 504-3
4.3 External Electromagnetic Environments 504-3

5 E3 TEST AND VERIFICATION PROGRAMS 540-3

5.1 Test Location 504-4
5.2 Radio Frequency Safety 504-4
5.3 EMC Source-Victim Matrices 504-4
5.4 Supporting Vehicle/Platform EMC 504-4
5.5 Radio communication and Radar EMC Tests 504-4
5.6 Non-Developmental Items (NDI) and Commercial Items 504-4
5.7 Electromagnetic Spectrum Compatibility 504-5
5.8 Electrical Bonding 504-5
5.9 Lightning Adapted from AECTP 500, Edition 4, First draft, paragraph 2.3.5 504-5
5.10 TEMPEST 504-5
5.11 Emission Control (EMCON) 504-6

6 DOCUMENTATION AND DELIVERABLES 504-6

7 ACRONYMS 504-7

8 DEFINITIONS 504-8

9 APPLICABLE DOCUMENTS 504-8

TABLES

Table 504-1 EMCON Bandwidths 504-6

CATEGORY 504

Introduction to Platform and System Verification and Tests

1 INTRODUCTION

This Category details common electromagnetic environmental effects (E3) requirements to support the E3 Test and Verification Programs detailed in

a. AECTP 505 Air Platforms and Systems E3 Test and Verification

b. AECTP 506 Sea Platforms and Systems E3 Test and Verification

c. AECTP 507 Land Platforms and Systems E3 Test and Verification

This Category is applicable for complete systems, both new and modified.

2 TERMS AND DEFINITIONS

Refer to AAP-55 [Ref 1] NATO E3 Terms and Definitions Glossary [Note – Not yet published].

3 ORDER OF PRECEDENCE

In the event of a conflict between the text of this document and the references cited herein, the text of this document takes precedence. Nothing in this document, however, supersedes applicable laws and regulations unless a specific exemption has been obtained.

3.1 General

The system shall be electromagnetically compatible among all subsystems and equipment within the system and with environments caused by electromagnetic effects external to the system. Verification shall be accomplished as specified herein on production representative systems. Safety critical functions shall be verified to be electromagnetically compatible within the system and with external environments prior to use in those environments. Verification shall address all life cycle aspects of the system, including (as applicable) normal in-service operation, checkout, storage, transportation, handling, packaging, loading, unloading, launch, and the normal operating procedures associated with each aspect.

3.2 Electromagnetic Compatibility Advisory Board (EMCAB)

An EMCAB shall be formed to discuss and track issues related to the E3 Test and Verification Program. EMCAB membership shall comprise of Procurement Office and Prime Contractor representatives. The Procurement Office and the Prime Contractor shall serve as co-chairs of the EMCAB. The Prime Contractor shall be responsible for the recording of Meeting Minutes and Action Items, and for the production of Electromagnetic Interference (EMI) Impact Assessments and EMI Impact Statements. The EMCAB will meet as often as required.

4 DETAILED REQUIREMENTS

4.1 Margins

Margins shall be provided based on system operational performance requirements, tolerances in system hardware, and uncertainties involved in verification of system-level design requirements. Safety critical and mission critical system functions shall have a margin of at least 6 dB. Electrically Initiated Devices (EIDs) shall have a margin of at least 16.5 dB of maximum no-fire stimulus (MNFS) for safety assurances and 6 dB of MNFS for other applications. Compliance shall be verified by test, analysis, or

a combination thereof. Instrumentation installed in system components during testing for margins shall capture the maximum system response and shall not adversely affect the normal response characteristics of the component. When environment simulations below specified levels are used, instrumentation responses may be extrapolated to the full environment for components with linear responses (such as hot bridgewire EIDs). When the response is below instrumentation sensitivity, the instrumentation sensitivity shall be used as the basis for extrapolation. For components with non-linear responses (such as semiconductor bridge EIDs), no extrapolation is permitted.

4.2 Intra-System Electromagnetic Compatibility

The system shall be electromagnetically compatible within itself such that system operational performance requirements are met. Compliance shall be verified by system-level test, analysis, or a combination thereof.

4.3 External Electromagnetic Environments

External electromagnetic environments (EME's) and levels are detailed in the AECTP 250 series. Not all environments apply to all platforms and systems. Of particular note are AECTP 253 [Ref 2], 254 [Ref 3] 256 [Ref 4] and 258 [Ref 5}. The Design Authority should identify applicable external electromagnetic environments.

The system shall be electromagnetically compatible with its defined external radio frequency electromagnetic environment such that its system operational performance requirements are met.

5 E3 TEST AND VERIFICATION PROGRAMS

Platform and System E3 Test and Verification Programs shall include the following

a. A Configuration Check of the system equipment, software/firmware, components, cables, cable routings and terminations shall be performed to confirm the platform or system is constructed and configured in a manner that is representative of the final production level deliverable;

b. A Functionality Check shall be performed to verify all platform and system functions and all installed subsystems and equipment meet stated operational performance requirements, specifications and tolerances;

c. Functional Performance Baseline Tests shall be defined and repeated at the start or end of each test day, or start and end of each E3 Test segment;

d. EMC Source-Victim Tests shall be performed to demonstrate platform or system intra-system EMC. These can include:

   i. Broadband Source-Victim tests;

   ii. Narrowband Source-Victim tests based on potential frequency interference combinations determined by analysis; and

   iii. Power distribution system switching Source-Victim tests;

e. Radio Frequency Safety tests, analyse or inspections shall be performed if the platform or system contains on board emitters; and

f. Interoperability Tests shall be performed as required. For the purposes of Category 504, Interoperability is taken to mean Radio communication/Radar Interoperability, the proper transfer of information between platforms and systems, and the proper and safe operation of supporting platforms and systems. E.g. fixed or rotary wing aircraft that will directly interoperate or function with a ship.

5.1 Test Location

The facility/location selected to perform the E3 Test and Verification Program shall be approved by the Design Authority in advance of the Test Program.

5.2 Radio Frequency Safety

The system design shall protect personnel, fuels, and ordnance from hazardous effects of electromagnetic radiation. Compliance shall be verified by test, analysis, inspections, or a combination thereof.

The system shall comply with national criteria for the protection of personnel against the effect of electromagnetic radiation. NATO criteria are currently found in STANAG 2345 [Ref 6]. Compliance shall be verified by test, analysis, or combination thereof.

Fuels shall not be inadvertently ignited by radiated EMEs. The EME includes onboard emitters and the external EME. Compliance shall be verified by test, analysis, inspection, or a combination thereof.

EIDs in ordnance shall not be inadvertently actuated during or experience degraded performance characteristics after exposure to the applicable external EME levels of [Ref 5] for both direct RF induced actuation of the EID and inadvertent activation of an electrically powered firing circuit. Compliance shall be verified by test and analysis. Test and evaluation guidance is provided in AECTP 508 [Ref 7].

5.3 EMC Source-Victim Matrices

EMC Source/Victim Matrices shall be developed for all Flight Safety, Safety Critical and Mission Critical Equipment and Subsystems and for all electrically initiated ordnance systems.

The Design Authority shall approve, in advance of the E3 Test and Verification Program, the specific equipment operating modes and associated failure or susceptibility criteria to be applied.

Intra-system EMC compliance shall be verified by test for each EMC Source/Victim Matrix developed. (An E3 Test Program of a large surface ship may include several EMC Source-Victim Matrices).

Intra-system EMC compliance of interior spaces shall be verified by test with all interior and exterior platform antennas radiating.

5.4 Supporting Vehicle/Platform EMC

Vehicles or platforms that are used to form part of the system or system installation (e.g. helicopters) shall be electromagnetically compatible with the system such that vehicle/platform operational performance requirements are met. An EMC Source/Victim Test shall verify compliance of each individual class or family of vehicles or platforms.

5.5 Radio communication and Radar EMC Tests

Tests involving radio communications or radar subsystems shall be repeated for each differing wave shape that may be transmitted or received.

5.6 Non-Developmental Items (NDI) and Commercial Items

NDI and commercial items shall meet electromagnetic requirements suitable for ensuring that system operational performance requirements are met. Compliance shall be verified by test, analysis, or a combination thereof. The following shall apply:

a. When Selected by the Contractor - When it is demonstrated that a commercial item selected by the Contractor is responsible for equipment or subsystems failing to meet stated operational performance requirements, either the commercial item shall be modified or replaced or interference suppression measures shall be employed, so that stated operational performance requirements are met;

b. When Specified by the Design Authority - When it is demonstrated by the Contractor that a commercial item specified by the Design Authority for use in the system is responsible for failure of the equipment or subsystem to meet its stated operational performance requirements, the data indicating such failure shall be presented to the EMCAB. No modification or replacement shall be made unless authorized by the Design Authority; and

c. Government Furnished Equipment (GFE) - When it is demonstrated by the Contractor that a GFE is responsible for failure of an equipment or subsystem to meet its stated operational performance requirements, the data indicating such failure shall be presented to the EMCAB. No modification shall be made unless authorized by the Design Authority.

See also AECTP 500 **Clause 3.5.4**.

5.7 Electromagnetic Spectrum Compatibility

A national Application for Frequency Supportability Form, or equivalent, shall be submitted to the EMCAB for review for each RF transmitter, receiver and antenna.

5.8 Electrical Bonding

The system, subsystems, and equipment shall include the necessary electrical bonding to meet the E3 requirements of this standard. Compliance shall be verified by test, analysis, inspections, or a combination thereof, for the particular bonding provision.

5.9 Lightning

The testing of equipments and systems to all aspects of the lightning threat is not fully covered in the AECTP 500 series. The following is a summary of that content and shall apply to platforms/systems as directed by the Design Authority:

d. Indirect Effects: See AECTP 500 **Clause 2.3.5**;

e. Direct Effects: Aircraft platforms are not addressed by this edition of AECTP 500. Category 505 includes tests for platform level clearance of electronic equipments due to induced effects of a lightning strike to the aircraft. Guidance on Directs Effects testing can be obtained from DO-160, Section 23 [Ref 8];

f. It is not normal practice to undertake any direct lightning strike tests on ships except where there are radomes or other non-conductive covers etc high up on the ship. For these items, direct effects tests are advised and the procedures used for aircraft radomes are applicable. For non-metallic ships again there is little or no lightning testing except to ensure that the lighting protection system (finials etc. on mast(s) and their conductors to an earth plate under the hull have a low ohmic connection); and

g. Testing for weapon systems is covered comprehensively in AECTP 508/4 [Ref 9]. This addresses possible damage mechanisms due to burn through, hot spots, dielectric puncture and mechanical stresses.

5.10 TEMPEST

National security information shall not be compromised by emanations from classified information processing equipment. Compliance shall be verified by test, analysis, inspections or a combination thereof. (Compromising emanations are unintentional intelligence bearing signals, which if intercepted and analyzed, would disclose national security information transmitted, received, handled, or otherwise processed by any classified information processing system).

NATO SDIP-27 [Ref 10] details equipment standards and NATO SDIP-29 [Ref 11] details installation standards (Red/Black). NATO AC322-D4/050 [Ref 12] details TEMPEST baseline requirements and installation guidance. DEF STAN 08-50 [Ref 13] provides a testing methodology for verifying compliance with TEMPEST requirements.

The need to apply TEMPEST requirements is determined by the Certified TEMPEST Technical Authority (CTTA). The CTTA considers several vulnerability and threat factors to determine the residual risk to which the information is exposed. The CTTA then determines if countermeasures are required to reduce risk to an acceptable level and identifies the most cost effective approach to achieving imposed TEMPEST requirements.

5.11 Emission Control (EMCON)

Unintentional electromagnetic radiated emissions shall not exceed (-105) dBm/m2 at one kilometre in any direction from the system over the frequency range of 500 kHz to 40 GHz, when using the resolution bandwidths listed in Table 504-1. Compliance shall be verified by test and inspection.

Frequency Range (MHz)	6 dB Bandwidth (kHz)
0.5 – 1	1
1 – 30	10
30 – 1000	30
1000 - 40000	100

Table 504-1 EMCON Bandwidths

Notes:

1. Video filtering shall not be used to bandwidth limit the receiver response.
2. Larger bandwidths may be used, but no correction factors are permissible.
3. MIL-STD-464 [Ref 14] provides guidance on EMCON.

6 DOCUMENTATION AND DELIVERABLES

The following documentation shall be submitted for approval by the Design Authority:

a. E3 Test and Verification Procedures:

b. E3 Test and Verification Report:

c. E3 Integration and Analysis Report, that includes EMI Control Drawings to depict the locations of the following:

   i. physical warning measures to support Radio Frequency Safety (e.g. signage, barriers, fences);

   ii. bonding and grounding provisions by welding, bolting, clamping or straps;

   iii. non-metallic and non-magnetic material;

   iv. Radar Absorbing Materials; and

   v. other EMI control measures;

d. Electromagnetic Spectrum Compatibility Data including Frequency Supportability Forms and a Radio Frequency Spectrum Utilization Chart;

e. EMC Source/Victim Matrices;

f. Flash Point Temperature data of all fuels and oils;

g. Bulkhead Panel Penetration Report that describes:

   i. Bulkhead Location. E.g. Deck Level, Side or quadrant of a ship;

ii. Type of Penetration (e.g. pipe, conduit, shielded cable, transit block);

iii. Exposed Cable Length(s);

iv. Test Point Identification (as applicable. I.e. cable number/identification and termination);

v. Cable Types;

vi. Equipment or Sub-System;

vii. Drawing Number; and

viii. Bonding data and date;

h. Antenna Specification and Measurement Data Report;

i. Antenna Location Drawing(s);

ii. Detailed antenna configuration, antenna, antenna coupler, multi-coupler and filter construction diagrams;

iii. Detailed antenna, antenna coupler, multi-coupler and filter specification data;

iv. VSWR test data of each antenna installation; and

v. Smith Chart test data of each antenna installation;

i. Antenna Obstacle Interaction Matrix. (I.e. A matrix for antennas that identifies the impact to antenna radiation patterns due to In-Band and Out-of-Band RF responses, blockages, Line of Sight issues, diffraction, reflections and other impacts to the antenna radiation pattern); and

j. Self-Defence Coverage Diagrams. (I.e. A diagram showing where ordnance subsystems or target or tracking subsystems are blocked).

7 ACRONYMS

The following acronyms are used:

E3	Electromagnetic Environmental
EID	Electrically-Initiated Devices
EMC	Electromagnetic Compatibility
EMCAB	Electromagnetic Compatibility Advisory Board
EMCCP	Electromagnetic Compatibility Control Plan
EME	Electromagnetic Environmental
EMITP	Electromagnetic Interference Test Plan
EMITR	Electromagnetic Interference Test Report
GFE	Government Furnished Equipment
MNFS	Maximum No Fire Stimulus
NDI	Non Development Item
RF	Radio Frequency
VSWR	Voltage Standing Wave Ration

8 DEFINITIONS

EID

Any single shot component or sub-assembly initiated by electrical means and having an explosive, pyrotechnic, or mechanical output resulting from an explosive, pyrotechnic, laser or electrothermal action.

Mission Critical

A characteristic or function of an equipment or system in which a failure can cause the task or operation demanded from the material to be abandoned or severely impaired.

Safety Critical

A characteristic or function of an equipment or system in which a failure or malfunction may cause a direct hazard to personnel and/or loss of materiel.

Safety Related

A characteristic or function of an equipment or system whose correct operation contributes to the safety of personnel or material

9 APPLICABLE DOCUMENTS

Ref 1	AAP-55	NATO E3 Terms and Definitions Glossary
Ref2	AECTP 253	Electrostatic Charging, Discharging and Precipitation Static
Ref 3	AECTP 254	Atmospheric Electricity and Lightning
Ref 4	AECTP 256	Nuclear Electromagnetic Pulse
Ref 5	AECTP 258	Radio Frequency Electromagnetic Environments
Ref 6	STANAG 2345	Evaluation and Control of Personnel Exposure to Radio Frequency Fields 3 kHz to 300 GHz
Ref 7	AECTP 508	Electrical/Electromagnetic Environmental Effects Test and Verification – Ordnance Systems
Ref 8	DO160	Environmental Conditions and Test Procedures for Airborne Equipment – Section 23 Lightning Direct Effects
Ref 9	AECTP 508/4	Electrical/Electromagnetic Environmental Effects Test and Verification Ordnance Systems – Leaflet 4 – Lightning, Munition Assessment and Test Procedures
Ref10	NATO SDIP-27 (formerly AMSG 720B, AMSG 788A and AMSG 784)	
Ref 11	NATO SDIP-29 (formerly AMSG 719G)	
Ref 12	NATO AC322-D4/050	NATO C3 Board INFOSEC Technology and Implementation Directive on CE, (29 April 2002)
Ref 13	DEF STAN 08-50	Installation Guidance for Meeting the Requirements of Naval TEMPEST Testing
Ref 14	MIL-STD-464	Electromagnetic Environmental Effects Requirements for Systems

CATEGORY 505

AIR PLATFORMS AND SYSTEMS ELECTROMAGENTIC ENVIRONMENTAL EFFECTS TEST AND VERIFICATION

1 AIM 505-3

2 APPLICABILITY 505-3

3 The EM ENVIRONMENT 505-3

3.1 Frequency Domain 505-3
3.2 Time domain 505-3

4 ELECTROMAGNETIC ENVIRONMENT EFFECTS (E3) REQUIREMENTS 505-3

5 SYSTEMS ENGINEERING APPROACH TO E3 VERIFICATION 505-4

6 THE PERFECT FINAL EM VERIFICATION TEST 505-5

7 AN EXAMPLE OF A PRACTICAL APPROACH 505-6

8 VERIFICATION PROCESS 505-7

8.1 Design Assessment and Control Procedures (Step 1) 505-8
8.2 Equipment Qualification Testing (Step 2) 505-9
8.3 System Integration Rig Testing (Step 3) 505-9
8.4 Aircraft Test Approach Decision (Step 4) 505-9
8.5 Aircraft Testing – HIRF and similar Frequency Domain Threats (Steps 5 -8) 505-10
8.6 Aircraft Testing – Time Domain Testing, NEMP (Steps 5 - 8) 505-18
8.7 Aircraft Testing: Time Domain Testing, Lightning 505-21

9 Intra-System Electromagnetic Compatibility (EMC) Testing 505-22

10 APPLICABLE DOCUMENTS 505-24

10.1 References 505-24

11 ACRONYMS 505-24

12 DEFINITIONS 505-25

FIGURES

Figure 505-1 Family Tree of Aircraft E3 Certification 505-4
Figure 505-2 Stress/Strength Relationship and Margins 505-5
Figure 505-3 Flow Chart Showing Routes for E3 Verification 505-7
Figure 505-4 Direct Injection Test Arrangements 505-11
Figure 505-5 LLSC Setup Using Field Illumination 505-12

Figure 505-6 Example of Reverberation Chamber for Aircraft Testing 505-13
Figure 505-7 Fixed Wing Aircraft and Rotorcraft Antenna Positions < 400MHz 505-16
Figure 505-8 Fixed Wing Aircraft and Rotorcraft Antenna Positions > 400MHz 505-17
Figure 505-9 Illustration of a Horizontally Polarised NEMP Simulator 505-22
Figure 505-10 Illustration of a Vertically Polarised NEMP Simulator 505-20
Figure 505-11 Plan View of a Lightning Return Conductor Rig 505-22

CATEGORY 505

Air Platforms and Systems Electromagnetic Environmental Effects Test and Verification

1 AIM

The aim of this category is to present verification approaches for demonstrating the ability of military aircraft to operate in the electromagnetic (EM) environment.

2 APPLICABILITY

This category is to be used as a guide in establishing verification methodology for a particular aircraft application.

3 The EM ENVIRONMENT

The EM environment is broken down into two domains:

3.1 Frequency Domain

Environmental waveforms, whose energy is concentrated about a particular frequency (which usually is modulated carrier), an example is high intensity radiated fields (HIRF) from sources such as ground communication and radar transmitters. These waveforms are usually manmade.

3.2 Time domain

Environmental waveforms, which are discrete pulses and whose energy is spread across a wide portion of the frequency spectrum, examples are nuclear electromagnetic pulse (NEMP) and lightning. These waveforms may be manmade or natural.

4 ELECTROMAGNETIC ENVIRONMENT EFFECTS (E3) REQUIREMENTS

Typical EM environments relevant to aircraft are defined in AECTP 258 Ref [1] defines the requirements for clearing aircrafts against electromagnetic effects. The purpose of this document is to provide verification approaches to provide E3 certification at the aircraft system level to ensure safe and effective operation in the EM environment. Test methods for qualifying electrical and electronic equipment are covered in AECTP 501 Ref [2]. The inter-relationship of this document and Refs [1], and [2] is presented in **Figure 505-1**. The phenomena of electrostatic charging in flight and associated test procedures are covered separately in STANAG 3856 Ref [3].

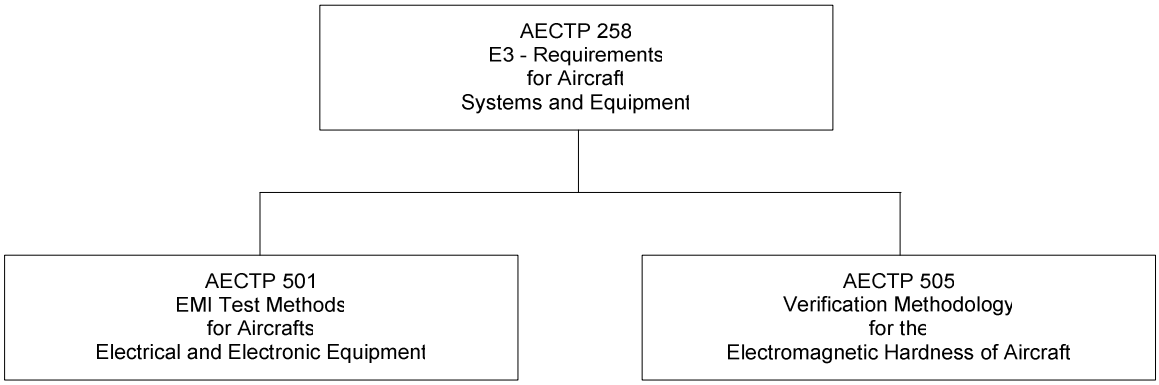

Figure 505-1 Family Tree of Aircraft E3 Certification

5 SYSTEMS ENGINEERING APPROACH TO E3 VERIFICATION

E3 requirements should be verified through an incremental verification process. "Incremental" implies that verification of compliance with E3 requirements is a continuing process of building an argument (audit trail) throughout the development of an aircraft that the design satisfies the imposed performance requirements. Initial engineering design must be based on analysis and models. This phase may use legacy data from previous programmes, and EM modelling code predictions, or more likely, a combination of these. As hardware becomes available, testing of elements of the aircraft can be used to validate and supplement the analysis and models. The design evolves as better information is generated. When the aircraft is actually produced, any necessary testing of the aircraft with any follow-on analysis completes the incremental verification process.

The correct balance of analysis and test to verify a particular requirement is generally dependent on the degree of confidence in the results of the particular method, technical appropriateness, associated costs, and availability of assets.

Analysis and testing complement each other, prior to the availability of hardware, analysis may be the only tool available to ensure that the design incorporates adequate provisions. Testing may then be oriented toward validating the accuracy and appropriateness of the models used. The level of confidence in a model with respect to a particular application determines the balance between analysis and testing.

The use of EM modelling codes or the analysis of legacy data from previous tests to predict coupling into an airframe can provide an important role in risk reduction in the early stages of a programme. The role of analysis and modelling can be summarised as follows:

a. Determination of appropriate design requirements to be included in the equipment EMI specifications or standards.

b. Use as a design tool to prevent costly design mistakes being made in the electromagnetic hardness design of an aircraft. It should also be able to assess the impact of airframe and installation design changes on the electromagnetic hardness of the aircraft.

c. Use as an aid to designing aircraft test arrangements and minimising test error such as that incurred by testing aircraft on the ground.

Figure 505-2 shows the flow down of the stresses on the outside of the aircraft to required strengths (imposed EMI requirements) of the onboard equipment to ensure that equipment does not respond. This figure pictorially shows the basic theme addressed throughout much of this document. External EM environments exist outside of the aircraft structure. They can be described in terms various physical quantities such as electromagnetic fields or surface currents. Transfer functions describe the

relationship between these stresses and the stresses that appear as fields, voltages, or currents inside the aircraft. The transfer functions take into account basic electromagnetic features of the aircraft and any tailored hardening included to addressing E3. The transfer functions can be determined through analytic techniques, testing, or a combination. The choice of appropriate physical quantities is important. For example, bulk cable currents can be estimated through analysis and are commonly used to test equipment on the aircraft and in the laboratory. Margins relate the known hardness (strength) of an equipment item to the actual stresses that are present. They should be used based on aircraft operational performance requirements, tolerances in aircraft hardware, and uncertainties involved in verification of aircraft-level design requirements. Safety critical and mission critical aircraft functions should have a margin of at least 6 dB. Ordnance should have a margin agreed by the relevant National Safety approving authorities. Where no other agreement is reached 16.5 dB of maximum no-fire stimulus (MNFS) for safety consequences and 6 dB of MNFS for reliability consequences should be used.

Due the uncertainties of using analytical models with the complexities of aircraft design from an EM standpoint, testing is essential to completing a convincing verification argument. This document emphasises the testing aspect of verification.

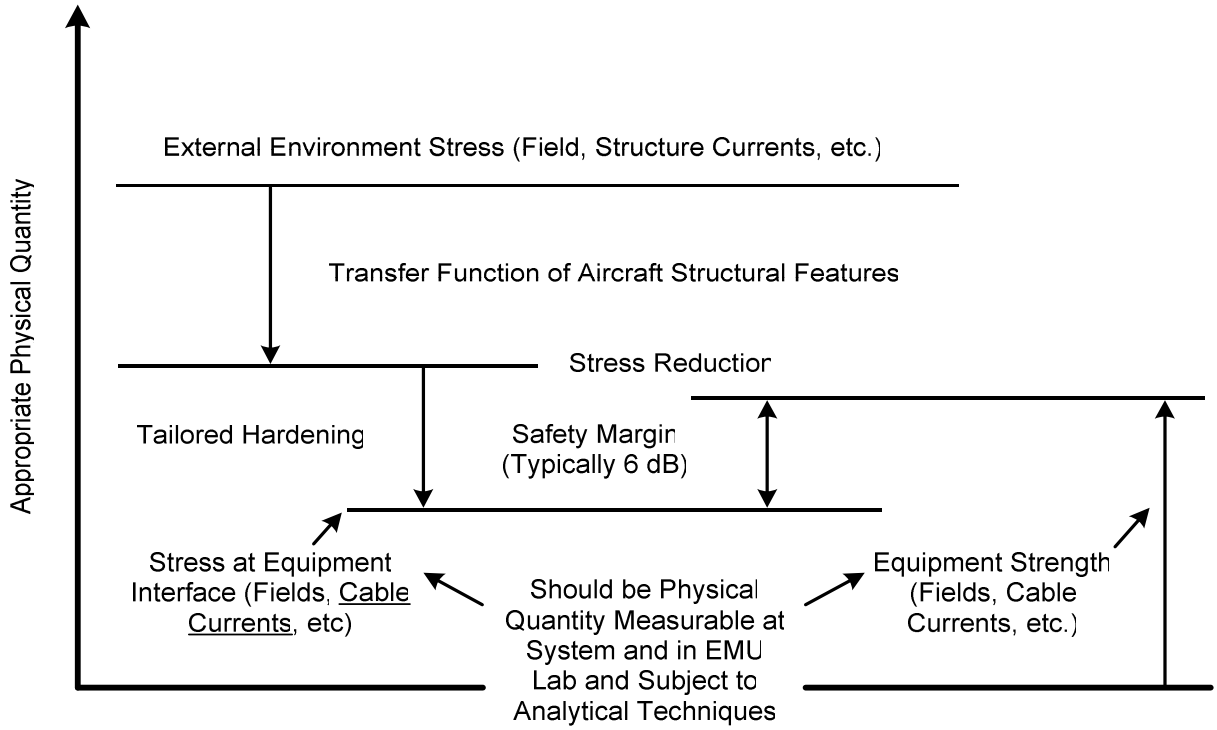

Figure 505-2 Stress/Strength Relationship and Margins

6 THE PERFECT FINAL EM VERIFICATION TEST

It is useful to discuss the “perfect” test to assess the E3 hardness of an aircraft. The ultimate and most accurate assessment of the ability of an aircraft to operate in any electromagnetic environment is to expose it to that environment. The assessment must simulate actual in-flight conditions. It must be conducted for all illumination angles and polarisations (injection paths in the case of lightning), all variations of possible parameters of the threat (such as operating frequency and modulation for frequency domain threats), all aircraft configurations, and all operating modes of onboard equipment. For all environments, the total volume of the aircraft needs to be fully illuminated to the stresses of the EM fields or applied currents to ensure that all coupling mechanisms are properly explored.

Ideally, the aircraft should not be connected to ground power or hydraulic supplies as these will affect the coupling of the EM environment into the vehicle. The aircraft must be powered from its own internal sources and for many equipment items and sub-systems, APU power may be adequate. Evaluation of the engines systems themselves can only be effectively conducted with the engines running. Finally, the tests should be repeated with the aircraft in flight so that the effect of the ground is minimised in the measurements, and the sub-systems such as flight control are operating with proper sensor inputs and aerodynamic feedback.

Small changes in any of the above can dramatically affect results such as the shape and the amplitude of the induced currents on the cable bundles. The upset bandwidth for electronic equipment can be very narrow therefore limited spot frequency testing for frequency domain threats can miss potentially dangerous malfunctions.

The above "perfect" approach is technically impractical for many reasons, such as the problems of supporting the aircraft on a test stand with engines running, removing the effects of the ground, and generating adequate uniform fields over the volume of the aircraft, using adequate frequency coverage.

7 AN EXAMPLE OF A PRACTICAL APPROACH

An actual final test may involve limited irradiation of the aircraft with threat level fields or, in the case of lightning, injecting threat level currents at selected points. As an alternative approach with lower facility costs than testing the total aircraft with threat simulators, the following methodology is being increasingly used:

a. Measure the coupling of EM energy (transfer function) into the interior of the aircraft over the total frequency band of all the environments by illuminating the aircraft with low level swept continuous wave (CW) radiated fields or by injecting swept CW currents into the airframe. These measurements can be made in “free field” conditions or in a reverberation chamber, where the aircraft is illuminated by a statistically random field in terms of illumination angle and polarisation providing a “worst case” coupling assessment.

b. Use suitable signal processing algorithms and compute from the coupling measurements, the currents that would be induced by the various frequency domain and time domain environments on the wiring systems.

c. Directly inject the predicted threat currents on the wiring systems, or at higher frequencies (>400MHz) associated with many frequency domain threats, irradiate the equipment and its wiring being assessed with simulated threat fields. Frequency domain threats should be appropriately modulated to simulate emitter parameters. This testing can be applied at system rig level (alternatively termed the systems integration facility), providing the rig is an accurate representation of the aircraft system.

An advantage of this approach is that there is no requirement for large fixed site facilities consequently the equipment required can be transported to any site. This approach may also be used simply to expedite testing at the aircraft level. If upsets are not being observed, then testing of various illumination angles, polarisations and aircraft configurations is relatively fast.

A disadvantage of this approach is that any departure from the "perfect" approach may not verify all possible conditions. Some limited full threat testing may still be required by the customer to provide confidence in this approach. The more detailed methodology that follows, attempts to produce a "worst case" assessment and provide the required confidence that the verification recommendation is valid. Additionally, the non-linearity associated with lightning especially when dealing with an airframe utilising a high percentage of carbon fibre composite (CFC) material may lead to significant underestimation of the coupled stresses. In this latter case high level injection is recommended. The less the extrapolation required the less the potential error.

8 VERIFICATION PROCESS

Figure 505-3 provides a flow chart showing the basic routes in assessing the E3 hardness of an aircraft, from conception to the final "release to service statement" for all applicable EM threats. Each of the steps shown is discussed in the following clauses. **Clause 8.5** deal with the detailed test procedures at aircraft level as applied to frequency domain threats such as one of the EME environments as defined in the AECTP 258 Ref [1]. **Clause 8.6** outline the procedures for dealing with time domain threats at aircraft level such as NEMP and lightning, indicating commonality where appropriate.

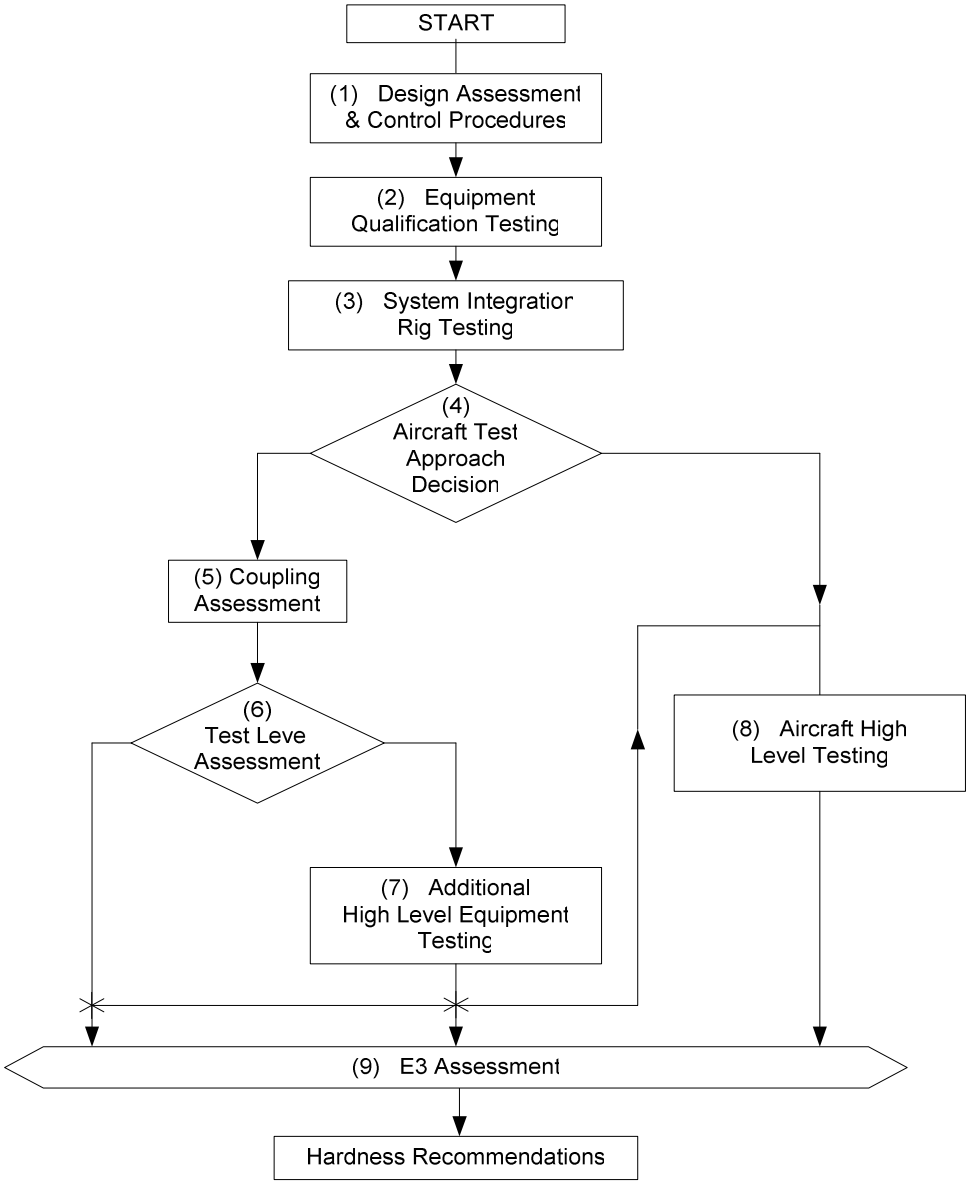

Figure 505-3 Flow Chart Showing Routes for E3 Verification

The methodology required to achieve E3 verification is a process that starts as early as possible and continues throughout the development of the aircraft. The testing portion can be divided up into three categories, namely: equipment testing, system rig testing, and whole aircraft testing. The degree of testing will depend on the criticality of the sub-system with sub-systems performing SAFETY CRITICAL functions such as flight, armament, and engine control being subject to more stringent requirements than systems performing ESSENTIAL (MISSION CRITICAL) or NON-ESSENTIAL functions.

Testing at equipment and sub-system level can significantly reduce the degree of testing at the aircraft level. It has the advantage that more flexibility exists than at aircraft level to enable more comprehensive testing to be performed in terms of frequency coverage, different modulation types and different equipment operating modes. Testing at aircraft level is time consuming and expensive.

8.1 Design Assessment and Control Procedures (Step 1)

8.1.1 E3 Programme Management

It is essential that E3 issues be addressed through all phases of a new aircraft programme to minimise the risk of problems at a late stage where retrospective action would, even if practical, be extremely costly.

At the beginning of the programme, the E3 requirements and the criticality of individual equipment and subsystems in terms of function performed needs to be defined. A decision may be made to vary the E3 requirements depending on functional criticality and program constraints. For example it may be decided to apply lightning to safety critical functions only, but NEMP to both mission and safety critical functions. The assumption being that lightning would only affect one aircraft in a squadron and this attrition could be acceptable, whereas NEMP would affect the whole squadron and therefore jeopardise the mission.

8.1.2 EMI Requirements for Electrical and Electronic Equipment

Ensuring that appropriate EMI requirements are imposed on electrical and electronic equipment is the most effective means of ensuring compatible operation both among onboard equipment items and with external environments. The selected requirements for particular items should be based on other equipment that is onboard, and on analysis and modelling of the aircraft design and installation, taking due account of the location and any protection provided which contributes to attenuation of external field and currents. EM modelling codes using techniques such as method of moments and geometric theory of diffraction can be used to estimate coupled levels. Legacy data from previous aircraft types can be invaluable in estimating the expected internal stresses to be seen by the equipment and hence setting the requirement levels or defining the need for enhanced protection.

The equipment EMI requirements should address both conducted and radiated emissions and susceptibility (immunity) in both the frequency and time domain as appropriate to ensure both intra-system compatibility and compatibility with external environments. Ref [2] provides testing methods that are up-to-date and represent a major step forward in producing results which are repeatable and that can be used effectively in verification of the aircraft. Requirement levels are generally dependent upon individual applications and are therefore not included in Ref [2].

The use of commercial off-the-shelf (COTS) equipment or items developed on previous military programs is a common approach by aircraft programs to reduce overall development costs (See AECTP 503 [Ref 4]). The use of this equipment requires that a suitability analysis be performed to assess whether the equipment can be used without introducing E3 problems. Additional testing may become necessary or tailored hardening may need to be implemented in the aircraft to protect the equipment. In some cases, alternative equipment may need to be found if the proposed equipment simply cannot be integrated without problems.

Two documents that are useful for ensuring that EMI issues are properly addressed are an EMI Control Plan (EMICP) and EMI Test Procedures (EMITP).

a. EMICP should include a description of the equipment with emphasis on interface circuits and the methods of protection to be adopted. This information is vital to allow the cable loom design to be successful. Furthermore the equipment manufacturer should indicate how it is intended to ensure that the EMI performance of the equipment will be maintained throughout the production and service life.

b. EMITP should include a detailed description of each test method interpreted for the subject equipment along with the specified levels that must be met, equipment operating modes, and a definition of the failure criteria of the equipment during the test.

8.2 Equipment Qualification Testing (Step 2)

Formal EMI testing of equipment usually occurs well into the program but hopefully before aircraft system level testing. Prior to this stage, EMI testing of breadboard or prototype models are very helpful to identify weak area in the design and appropriate fixes. This approach minimises the risk that the equipment will fail its formal qualification test, with the associated cost and schedule penalties that would be incurred. EMI qualification testing can yield useful information which will help conduct a more effective aircraft test by providing information on types of malfunction, critical frequencies and levels at which malfunctions may occur for responses that are not considered significant enough to fix on their own merits.

The EMITP that deal with susceptibility (immunity) characteristics and that are most closely associated with clearing an aircraft for use in external EM environments include both frequency domain and time domain aspects.

For the frequency domain threats, two basic test procedures are used. First, the equipment under test (EUT) is radiated with radio frequency (RF) fields suitably modulated at the expected internal threat level. Second, RF currents are injected into the equipment's wiring by means of current transformers - bulk current injection (BCI). This procedure is limited to an upper frequency of 400MHz because of practical difficulties.

For time domain threats, again two basic procedures are used. First, time domain current waveforms are injected into the wiring of the EUT using BCI techniques. In the case of lightning, NEMP, and load switching transients, damped sine waves are injected into the wiring over the frequency band 10 kHz to 100 MHz. To cover the resistive/diffusion part of lightning, double exponential wave shapes are injected into the grounding leads on the EUT or applied by other means.

Ref [2] should be consulted for suitable equipment test procedures.

8.3 System Integration Rig Testing (Step 3)

For equipment performing flight and mission CRITICAL functions, testing and evaluation at integration facilities should be performed where this is practical, thereby significantly reducing the required amount of aircraft test time. For example, system integration tests, using BCI or radiated susceptibility test techniques, conducted on a mock-up of the final installation may reduce the degree of on-aircraft testing required. However, it must be shown that the mock-up adequately characterises the final installation. The bonding and grounding of the system, the composition and lay-up of the wiring harnesses, and the relative positions of the elements to each other and the ground plane should be closely representative of the actual installation. If the rig is built in the form of an "iron bird" where the cable runs are identical to the aircraft and are adjacent to a skeleton of metal such that the cable loom impedance is very similar to that obtained on the aircraft, then a significant test programme could be carried out on the rig with meaningful results. Being representative does not just mean the behaviour of the electrical signals in the intended bandwidth (often quite low) of the equipment, but also the behaviour of the out-of-band signals that arise in the E3 threat band of concern.

Test levels should be selected appropriately to reflect the predicted internal environment.

Even if the integration rig is not electromagnetically representative, it is still possible to investigate the upset behaviour of the complete system with all the active feedback simulated. This information will indicate very accurate and meaningful definitions of upset criteria. For flight control systems, a rig with simulated aerodynamic feedback is the only mechanism for determining this criteria; aircraft testing on the ground does not provide aerodynamic feedback.

8.4 Aircraft Test Approach Decision (Step 4)

a. General

Some test techniques may be more appropriate considering the size of the aircraft and the practicality of illuminating or evaluating the entire structure with the appropriate external

environment. The various proposed procedures are considered to be viable and are the subject of continuing evaluation.

b. Choice of Aircraft Test Procedure

There are two main approaches to aircraft testing.

1. The first utilises the Low Level Coupling technique (LLC) test (Step 5) using a sine wave (continuous wave (CW)) swept in frequency to measure airframe attenuation (transfer functions) and confirm that system integration test levels or laboratory EMI testing reflect the true internal environment.

   Depending on frequency, the LLC technique can be accomplished through field illumination of the aircraft or directly driving currents on the airframe. Additional high level equipment or aircraft system testing (Step 7) may ultimately be required if the levels used in EMI testing or rig testing were not adequate or the integration rig was not adequately representative. For greater confidence for EME testing, some spot frequency testing at high levels may be desirable as further confirmation of acceptable test results regardless of the LLC results. While the LLC techniques can be used for lighting indirect effects, an alternative method is to inject a double exponential current waveform into the aircraft that is a scaled version of the lightning threat and measure the resulting induced levels on cables.

2. The second approach (Step 8), for EME and NEMP, involves radiating the aircraft at levels representative of the external EM environment over the complete frequency band or pulse shape and amplitude in the case of time domain threats. This concept requires the generation of uniform fields over the complete volume of the aircraft. There are only a few appropriate test facilities worldwide, especially when large aircrafts are concerned. If a “Full Threat” test is not available or possible, Steps 5-7 are the suggested approach in these cases.

For lightning indirect effects under Step 8, currents equal to the full threat are injected into the airframe. Full threat testing is usually not performed due to little availability of test equipment capable of achieving full threat at the aircraft level and concerns with possible latent degradation of airframe components or electronics.

8.5 Aircraft Testing – EME and similar Frequency Domain Threats (Steps 5 -8)

8.5.1 Coupling Assessment (Step 5)

a. General

Several procedures that can be used to determine the coupling between the external EM field and the internal aircraft systems in this step are briefly described as follows.

Below 400 MHz, the basic approach consists of predicting or measuring skin currents on the aircraft structure, driving currents into the airframe, and measuring the currents resulting on internal wiring. Above 400 MHz, it consists of the measurement of internal fields resulting from external illumination of the aircraft.

The breakpoint of 400 MHz is not clear cut. It depends on when RF penetration of the aircraft structure becomes a factor. It is therefore necessary to overlap the two procedures to ensure that the primary coupling route is tested.

b. Low Level Direct Drive (LLDD) Test using Current Drives

This test is used to measure the transfer function at relatively low signal levels between the aircraft skin current and currents induced on individual equipment wiring bundles. The first step is to determine the aircraft skin current resulting from free field external radiation. This relationship needs to be determined for all illumination angles and polarisations either by accurate modelling in combination with a reduced set of skin current measurement results which shall be compared with the simulation results or use of a low level test using field

illumination of the aircraft. The modelling is accomplished by the use of 3D electromagnetic codes, such as finite difference, finite elements, or integral equations. Typically the currents are injected between various set of points on the aircraft - wing, engine, nose or tail. The resultant currents on the equipment cables are measured with a current probe and normalised to external unit field strength so that they can be scaled to the appropriate RF threat environment. The scaling to the appropriate RF threat shall be done with a comparison of the skin currents. Either the skin currents were numerically simulated and proven by a reduced set of measurements or determined by a full comparison between LLSC- and LLDD-measurements. The scaling factor shall be outlined separately and used for all further scalings and procedures to determine the relation between injected power in dBm and external electromagnetic field in V/m. **Figure 505-4** shows a simplified representation of the test arrangement with the return current via the Ground Plane. It is equally acceptable to use a coaxial rig similar to that shown in **Figure 505-11** rather than the Ground Plane. Nose-to-tail and nose-to-wing coaxial rigs are typical. For the current return path of the coaxial rig, the use of wires or metallic grids is equally acceptable although metallic grids do provide a better waveguide for higher frequency operations.

This test method has improved sensitivity compared with the low level swept field illumination (LLSC) described below and therefore is less demanding with respect to signal sources and power amplifiers. The determination of the scaling factor needs high attention and accurate modelling as well as accurate simulation and is a fundamental point in the LLDD technique. It is most useful for the frequency band from 10 kHz to a few MHz. The upper frequency limits depends on size of aircraft and degree of fuselage attenuation. The use of the direct drive technique above the first airframe resonance is allowed with the coaxial rig provided it is supported with numerical simulation. If it can be shown by measurements or numerical simulation that there is a good correlation of LLSC and LLDD also in higher frequency ranges a maximum frequency limit of up to five wavelength of the largest dimension can be acceptable for LLDD.

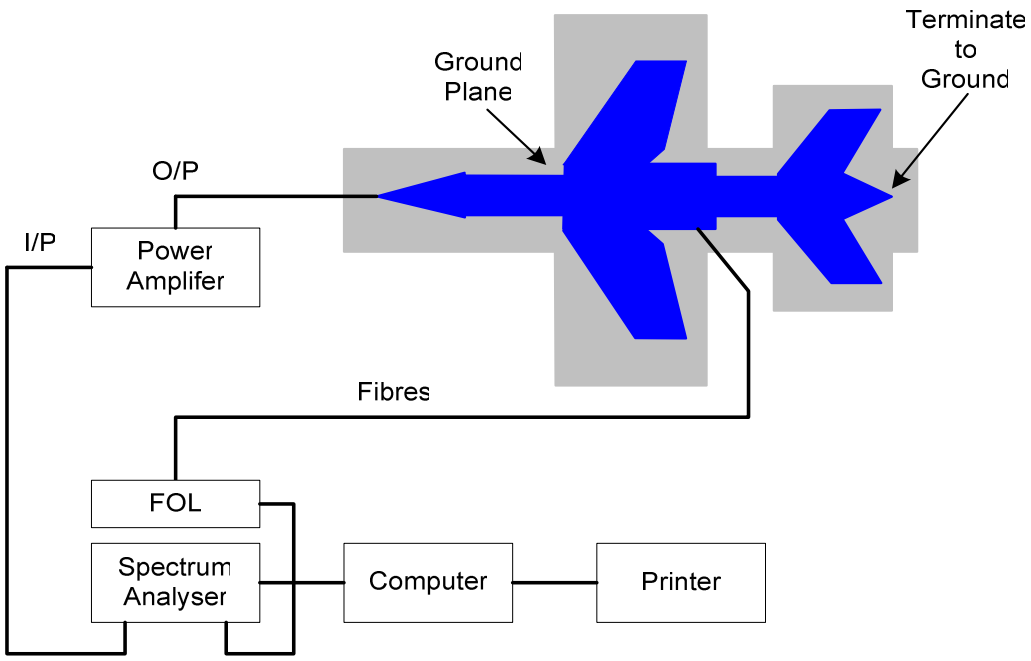

Figure 505-4 Direct Injection Test Arrangements

c. Low Level Swept Coupling (LLSC) test using Field Illumination <400 MHz.

The response of both aircraft and system cable bundles to external field illumination is resonant in nature and is dependent on both the structure and the installation. An external field illumination test is best suited to measure this response.

This procedure is used to measure directly the transfer function between the external field and the induced currents on equipment cable bundles. The aircraft is uniformly illuminated sequentially from all four sides by both horizontally and vertically polarised swept frequency fields, and the currents induced on the equipment cable bundles are measured. **Figure 505-5** shows a typical test arrangement.

The ratio of this current to the illuminating field strength is computed and the induced current is normalised what it would be at 1 V/m. This approach provides the transfer function in terms of induced current per unit external field strength, which can then be extrapolated to the required RF threat field strength by multiplying the induced current at 1V/m by the external RF field strength. The extrapolated RF currents for all measurement configurations for each bundle being assessed are overlaid and a worst case induced current profile produced.

Due to the standing waves induced on the cable bundles, the technique becomes questionable above 400 MHz where the measurement error makes internal field measurements described below the more valid technique.

The comparison between the worst case current signature for a particular wire bundle and the induced current at the test level or malfunction of the equipment is made over discrete frequency bands such as 0.05 - 0.5 MHz, 0.5 - 30 MHz, and 30 - 100 MHz. This breakdown into coarse bands is required because resonances may differ between the equipment test and the aircraft test.

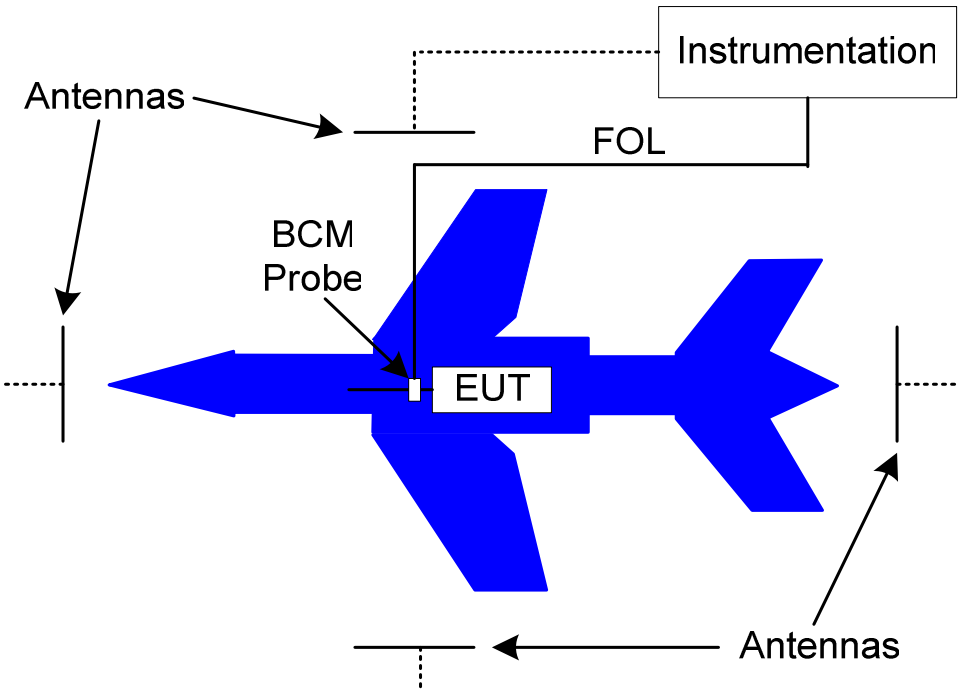

Figure 505-5 LLSC Setup Using Field Illumination

d. Low Level Swept Field (LLSF) test >400 MHz.

The illumination procedure used is similar to that given in previous section. The electric fields in the internal bay fields are measured instead of the cable bundle current. Various techniques are used to ensure that the maximum internal field in the vicinity of the equipment is measured. Dependent on the space available, multi-point measurements or mode stirring can be used. In this frequency band, more localised illumination of the aircraft is permissible providing the complete bay area where the equipment is situated is illuminated to ensure leakage through any access points into the bay (such as hatches) is measured.

e. Alternative Low Level Coupling Test using a Reverberation Chamber of typical 30 MHz (or even lower if affordable and manageable) to 18GHz.

An alternative approach currently under evaluation in various countries for use in coupling and susceptibility measurements on aircraft and equipment is the reverberation chamber. This technique can be used as an alternative to the LLSC/LLSF procedures above. It can directly measure either the transfer function between the external field and current induced on the equipment cable bundles or the attenuation provided in the aircraft bays (ratio of the external to internal fields). The lower frequency range of the chamber is a function of the chamber size, the lower the required measurement frequency the larger the required chamber size. **Figure 505-6** shows an example of a reverberation chamber:

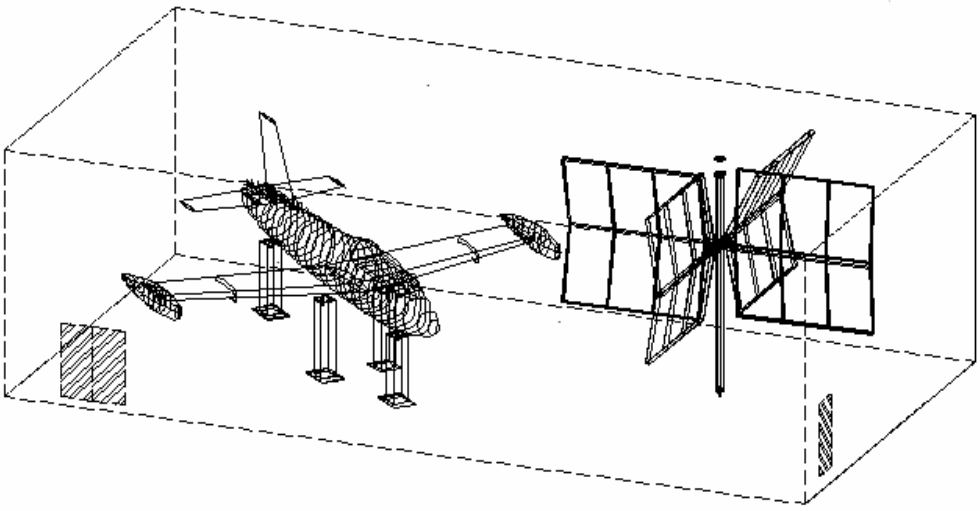

Figure 505-6 Example of Reverberation Chamber for Aircraft Testing

A mode stirred or reverberation Chamber is a shielded enclosure with the smallest dimension being large with respect to the wavelength at the lowest useable frequency. The chamber is normally equipped with a mechanical tuning/stirring device whose dimensions are significant fractions of the chamber dimensions and of the wavelength at the lowest useable frequency. When the chamber is excited with RF energy the resulting multi-mode electromagnetic environment can be “stirred” by the mechanical tuner/stirrer. The resulting environment at any physical location varies substantially as the tuner is rotated; however, the environment is both isotropic and uniform when “averaged” over a sufficient number of positions of the mechanical tuner/stirrer.

By placing an aircraft in such a chamber, the currents induced on the cable bundles and the internal bay fields can be measured whilst the aircraft is illuminated. The advantage of the technique is that all aspect angles are covered including the underside of the aircraft, which is normally very difficult to irradiate adequately. The disadvantage is that the lowest useable frequency response of the chamber is limited by its size. Full details of the design of these chambers can be found in NIST Technical Report 1092 Ref [4].

Such chambers are increasingly being used for immunity testing at the equipment level due to their high efficiency or producing desired fields with minimum input power.

Typical standard chambers off the shelf are designed for the frequency range 80 MHz up to 18 GHz or even 40 GHz. The starting frequency of the chamber becomes lower as the size of the chamber is larger A reasonable limit of the lowest usable frequency of a chamber which can be built and still is more efficient than free field testing, is 30 MHz for high level testing. Below this frequency the effort for building a chamber grows dramatically and the benefit vanishes because the chamber is that large that it comes close to free field testing but if low level testing is of interest even lower frequencies can make sense.

The calibration process of the chamber should be, except for the following two paragraphs, the same as for small chambers (DO-160/ED-14): validation of the field uniformity and isotropy, determination of the chamber characteristics (quality factor, time constant for pulsed tests, standard deviation, normalized fields, insertion loss…). The reference value should be the average of the maximum of all measured components of the E-field over the tuner rotation not the maximum of the total E-field over the tuner rotation, as described in the DO-160/ED-14 for equipment testing. As the aircraft may load the chamber in a significant way, it is recommended to realize a full calibration of the chamber in the presence of the aircraft (9 probe positions randomly located in the test volume, the distance between the probe positions and the aircraft and chambers walls should be greater than 1 m or $\lambda/4$ at the lowest test frequency. The probe should be positioned in order to prevent alignment with the main lobe of the transmit antenna). This allows:

i. To check that the chamber loading does not affect the field uniformity and that statistical properties can be applied,

ii. to determine the external environment more accurately than by using the empty chamber calibration data and the Chamber Loading Factor (CLF) related to the aircraft, and

iii. to determine the time constant for pulsed tests more accurately.

8.5.2 Test Level Assessment (Step 6)

This step involves making a comparison of the results of the transfer function measurements in Step 5 with demonstrated equipment hardness levels from BCI or radiated field testing in Steps 2 or 3. If compared with results from Step 2, some caution needs to be exercised due a possible lack of equivalence because of differences in installation such as cable lengths, screening (shielding), bonding, and cable composition. This aspect highlights the need to follow the requirement in Ref [2] that equipment cabling simulate actual installation and usage. Of course, similar issues can exist in the integration rig, if the cabling does not reflect the actual aircraft installation.

If Step 5 shows induced cable currents or internal fields above known hardness levels (including any assigned safety margins) then additional equipment testing in accordance with Step 7 is appropriate. A similar conclusion could be reached if assessments indicate potential vulnerabilities or there are questions concerning whether the testing at the integration rig (Step 3) or EMI laboratory (Step 2) sufficiently represented the aircraft installation. Alternatively, additional work under Steps 2 or 3 could be performed. Also, some aircraft hardening measures could be implemented to reduce the internal levels.

8.5.3 Additional High Level Equipment Testing (Step 7)

f. General

The purpose of this step is to evaluate the performance of equipment items at full threat levels as installed in the aircraft. The aircraft and relevant equipment should be fully operational. The equipment should be operated in various modes to ensure that the equipment is adequately evaluated and should be placed in maximum sensitivity configurations. The applied signals, whether cable injected or radiated, should be modulated as specified in **Clause 8.5.5**.

g. High Level Direct Drive Test

Under this approach, high level currents representative of the actual threat are directly injected into the airframe, using techniques similar to those described for direct drive under LLDD above (Step 5). This approach can only be applied if the scaling factor has been determined properly. This scaling factor has to be used to determine the power levels required for High Level Direct Drive. It is essential that modelling predictions or LLSC measurements are made to determine the skin current distribution that will exist for different polarisations and aircraft illumination directions so that these can be accurately simulated during this test.

The BCI technique described in the next section evaluates one equipment interface at a time. This procedure has the advantage of testing all interfaces of all equipment simultaneously. However, it is presently restricted in frequency to below the first airframe resonance due to the technical difficulties in ensuring the skin current pattern matches that which would be obtained with free field radiation. If it can be shown by measurements or numerical simulation that there is a good correlation of LLSC and LLDD also in higher frequency ranges, a maximum frequency limit of up to five wavelength of the largest dimension can be acceptable for LLDD

h. High Level Bulk Current Injection <400 MHz

The purpose of the test is to evaluate equipment performance when RF currents are injected onto its wiring via a current transformer. The installed system is tested using BCI with the test levels determined from Steps 5 and 6. Each bundle in the system is tested by injection of the required current, which is monitored by a separate current probe. If a bundle branches, then each relevant branch containing wiring of the system under test may need to be tested.

Since the effect being evaluated under BCI is a common mode event where all aircraft wiring will be excited at the same time, simultaneous bulk current injection on more than one wire bundle may be required on redundant systems to ensure that the redundant features don't produce overly optimistic results.

i. High Level Equipment Field Illumination Test >400 MHz

This test is applied either to equipment installed on the aircraft or to equipment in a representative rig. The equipment and its associated wiring are illuminated by a localised high level RF field. The magnitude of the RF field is determined by taking the levels determined in Step 5 and extrapolating to that which would exist if the aircraft were in the RF threat environment. The radiating antenna needs to be far enough away to ensure that the total volume of the equipment and $\lambda/2$ of the wiring is simultaneously and uniformly illuminated during testing.

8.5.4 Aircraft high level testing 10 kHz - 18 GHz (Step 8)

This procedure relies on being able to generate EM fields external to the aircraft equal to the RF threat Environment. The aircraft and onboard equipment should be fully operational. The equipment should be operated in various modes to ensure that the equipment is adequately evaluated and should be placed in maximum sensitivity configurations. The fields should be modulated as specified in **Clause 8.5.3a**.

For frequencies below 400 MHz, uniform illumination of the aircraft would be ideal. This should be the priority in frequency ranges where the airframe and cable resonances are dominant. The minimum antenna positions below 400 MHz are 4 quadrants around the aircraft. **Figure 505-7** shows possible positions for a fixed wing aircraft and a rotorcraft. The radiating antennas and aircraft should be sufficiently separated to ensure that uniform illumination is achieved, if possible. Both horizontal and vertical polarisations need to be used. The volume is calibrated by measuring the field strength in the centre of the test volume prior to the placement of the aircraft.

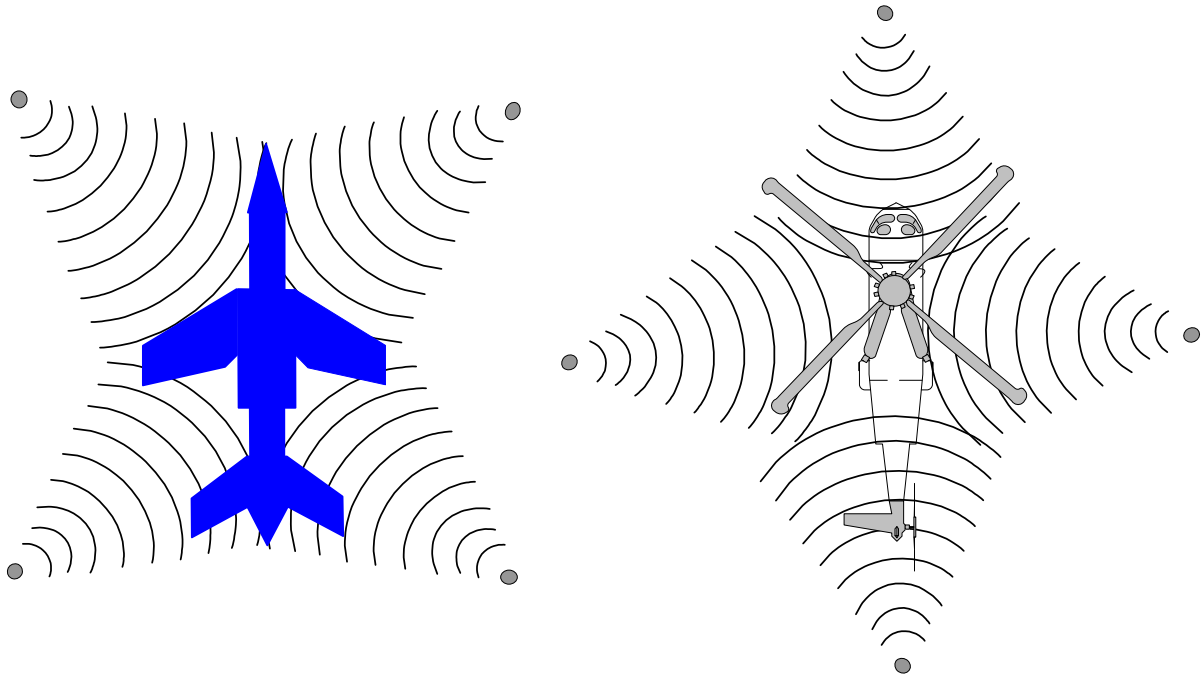

Figure 505-7 Fixed Wing Aircraft and Rotorcraft Antenna Positions < 400MHz

Above 400 MHz, spot illumination is practical. The priority in this upper frequency range is to ensure all leakage points into the bay housing the equipment under test are uniformly illuminated. The various portions of the aircraft are then illuminated by sequential antenna positions over the length of the aircraft. In either case, care should be taken not to pick an antenna positions that will expose the aircraft extremities to fields greater than the test level. This could happen to a wing mounted engine system when using a side position off the wing tip to illuminate the fuselage with the desired field. The minimum antenna positions for frequencies above 400 MHz are the 4 quadrants and the tail, cockpit, nose and engines. **Figure 505-8** shows possible positions for a fixed wing aircraft and a rotorcraft. Relevant apertures on the bottom and top side of the aircraft may be illuminated by using reflection planes (such as wheel bays). The separation distance between the transmitting antenna and the aircraft should be equal to or greater than the far field boundary of the transmitting antenna. As the separation distance is increased to allow the antenna beamwidth to illuminate the test area, there will be a decrease in the field which will have to be compensated by an increase in transmitter output (this may or may not be possible for the site's equipment). The frequency coverage should be sufficient to ensure that all resonant effects are adequately measured.

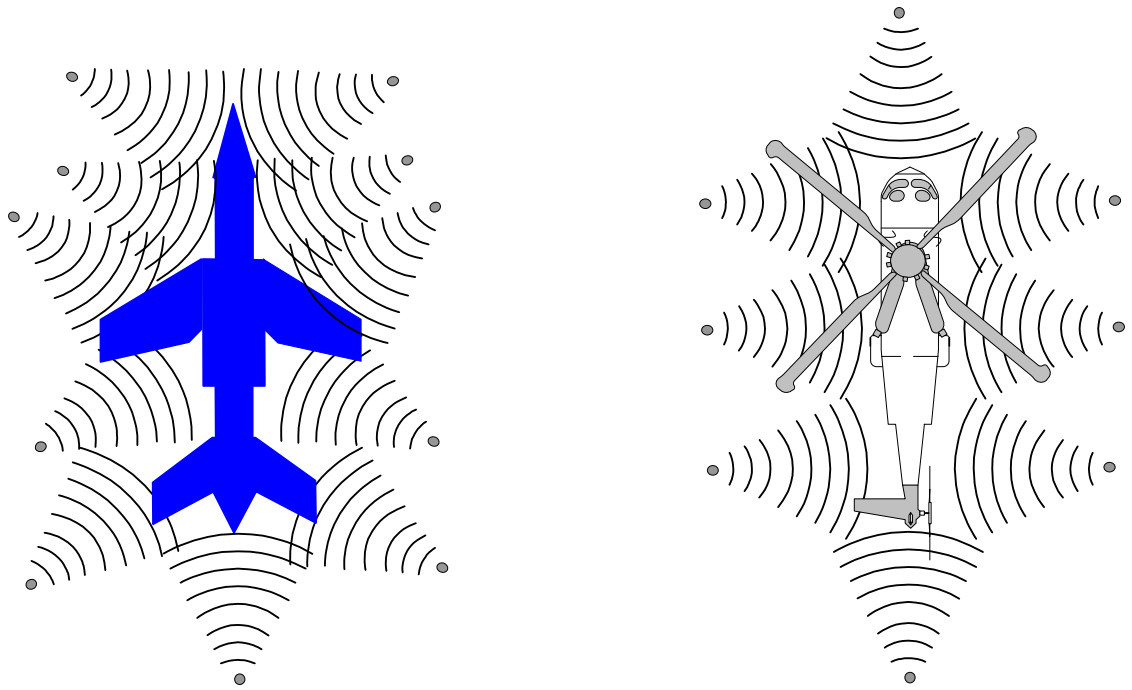

Figure 505-8 Fixed Wing Aircraft and Rotorcraft Antenna Positions > 400MHz

Alternative High Level Testing 10 kHz – a few tens of MHz using direct drive techniques

For aircraft high level testing between 10 kHz and a few tens of MHz, the use of direct drive techniques presented in §8.5.1 above the first airframe resonance are permitted as an alternative to field illumination provided it is supported with numerical simulation. The test setup should be optimized for the induced skin currents to cover to worst case in-flight skin currents due to various incidence and polarisation plane waves. For high level testing, the use of metallic grids for current return is mandatory to achieve a significant equivalent field level versus available power ratio. The numerical model of the test setup should be validated through skin current measurements.

When the power is provided by a ground power unit (GPU), the GPU and the cable link to the aircraft have to be isolated from the ground. Note also that the tyres have to be isolated from the ground plane to control the current path on the airframe and in the extremity load.

Alternative High Level Testing using a Reverberation Chamber 30 MHz to 18GHz

The use of mode stirred reverberation chambers for high level testing of aircraft in the frequency range 30 MHz to 18 GHz according to the procedure presented in §8.5.1 is also acceptable as an alternative technique to field illumination. For high level testing, reverberation chambers offer a high field level versus available power as well as full illumination of the aircraft. Moreover, all backdoor coupling paths can conveniently be covered through mode tuning.

8.5.5 Modulation

In all the applied frequency domain tests for Steps 7 and 8, the RF should be modulated with representative modulations. Modulation frequencies are sometimes selected that are related to the internal operating frequencies of the equipment under evaluation or simulate particular threats. The following modulation types are an attempt to define a baseline modulation:

10 kHz to 400 MHz	1 kHz square wave modulation of depth >90 percent. Continuous Wave (CW) The peak of the test signal for both types must meet the requirements based on the peak environment.
400 MHz to 18 GHz	1 kHz pulse modulation of at least 90 percent depth. The pulse width should be commensurate with the expected environment. Normally 1-10uS is used. The peak of the test signal must meet the requirement based on the peak environment. 1 kHz square wave modulation of at least 90 percent depth. The peak of the test signal must meet the requirement based on the average environment. CW. The peak of the test signal must meet the requirement based on the average environment.

Consider switching the signal on and off at a 1 Hz to 3 Hz rate and 50 percent duty cycle for an EUT which may have a low frequency response (such as flight control equipment). When using 1 Hz to 3 Hz modulation, ensure that sweeping or frequency stepping is suspended during the “off” period of the modulation.

In determining the modulation to be used, consideration should be given to the overall system response times to ensure that the modulation frequency is below the cut off for the equipment under evaluation.

8.6 Aircraft Testing – Time Domain Testing, NEMP (Steps 5 - 8)

"Full Threat" simulator testing is the preferred method for reliable NEMP hardening confirmation. This kind of simulator testing should be preferred whenever applicable and possible. The method involves placing the aircraft in large simulators that produce as near to the threat pulse as can be engineered considering the large size of the simulators and the problems in obtaining the correct waveform. A small number of available simulators can actually accomplish full threat. The simulators must be capable of covering all important polarisations and illumination angles. Often the highest coupling to the aircraft for horizontal polarisation is with the aircraft illuminated from the side or the tail, which conflicts with the normal illumination angle for maximum simulator field, being directly overhead.

If “Full Threat” simulator testing is not possible, "Low Level" pulse testing can be used. This is a lower cost option where a lower level, scaled version of the threat waveform is used. It is easier to generate a more representative waveform at these levels. The extrapolation from “Low Level” testing to “Full Threat” behaviour is valid only for linear effects. The non-linear effects are not covered with this method.

Another replacement method for “Full Threat” simulator testing is CW testing. The aircraft is illuminated (LLSC) or currents are injected (LLDD) by low level, coupling CW, free fields or injected power and the coupling response is measured in magnitude and phase on the aircraft wiring. If phase measurements are not possible the Minimum Phase Algorithm (MPA) shall be applied to determine the levels in the time domain. If phase and magnitude data is available the time domain response is obtained by the inverse Fourier Transformation. Providing the frequency coverage is adequate, the coupling of any time domain threat to the aircraft's wiring can be nearly predicted. Again with this method there are some shortfalls concerning non-linear effects of electronics equipment under test.

For all three of the procedures, the measured currents have to be extrapolated to those that would be produced from the full threat and current injection techniques used to inject the predicted threat currents directly into the wiring using Bulk Current Injection (BCI) techniques.

8.6.1 Coupling Assessment (Step 5)

A LLSC assessment can be performed in a similar fashion to the RF evaluation previously discussed in **Clause 8.5.1 b** and **c**. The transfer function can be generated by means of swept frequency field

illumination of the aircraft. From this transfer function, the time domain response of the cable bundles can be determined by suitable algorithms, providing the transfer function has been measured over a wide frequency range.

8.6.2 Test Level Assessment (Step 6)

The LLSC results are converted to time domain waveforms on cable bundles by suitable signal processing algorithms to predict the cable bundle currents that would be produced when the aircraft is exposed to the threat environment. This process involves mathematical convolution of time domain waveforms and the use of Fourier Transforms to convert between the frequency domain and time domain. The waveshape and amplitude of the currents induced on aircraft wiring during exposure to time domain threats will vary significantly with changes in polarisation, illumination angle and aircraft configuration. Among the factors responsible are changes in the dominating resonant frequencies and changes in the phase relationship between the individual frequency components. As a result there is no unique induced current waveshape on a particular bundle for a given waveshape.

The methodology for Step 6 for NEMP is essentially the same as **Clause 8.5.2** for RF testing. Known hardness levels for equipment are compared to results of the transfer function determinations. Since prior testing will have used waveforms (such as damped sinusoids) that are not identical to those found during transfer function assessments, a judgement is required to decide if prior equipment testing is adequate to demonstrate required hardness. If additional testing is necessary to characterise the equipment performance, Step 7 is a good alternative.

8.6.3 Additional High Level Equipment Testing (Step 7)

The normal means for performing additional testing is using the BCI procedures discussed in **Clause 8.5.3c** for RF testing. The primary difference is that it is desirable to produce the time domain waveforms resulting from the transfer functions. Depending on drive levels required, an arbitrary waveform generator in conjunction with a power amplifier may be able to develop the waveform. An alternative is to use the worst case threat currents predicted and a ringing frequency determined from Step 6 to determine the frequency and amplitude of a damped sinusoid to use for testing. This testing can be applied when the equipment is fitted to the aircraft or to a fully representative system rig.

8.6.4 Aircraft High Level Testing (Step 8)

Figure 505-9 & **505-10** show diagrams of typical horizontal and vertically polarised NEMP simulators based on dipole antennas. The aircraft is placed underneath (horizontal simulators), or to one side (vertical simulator) of, the simulator and illuminated with a threat field as close as practical. Another type of “Full Threat” NEMP simulators is an open waveguide application which generally provides a vertically polarized electromagnetic field and a relatively large homogenous test volume. The aircraft equipment is operational during the test. Induced currents and voltages are measured during the test along with the applied field wave shape. Any shortfall in the characteristics of the driving waveform has to be made good by direct current injection of the extrapolated threat currents into the aircraft wiring. For some aircraft programs, these types of simulators have been used only for determining transfer functions with equipment level testing being used to identify potential upsets or failures. The issue is whether the simulators produce a sufficient number of pulses to adequately evaluate equipment performance.

To minimise the impact of the ground on the coupling to the aircraft, the aircraft should be mounted on a non-conductive stand. However, this can compromise the ability to run the engines, which is essential not only to check their correct operation, but also to provide proper system operation in modern aircraft, where there is significant system interaction during flight.

Figure 505-9 Illustration of a Horizontally Polarised NEMP Simulator

Figure 505-10 Illustration of a Vertically Polarised NEMP Simulator

8.7 Aircraft Testing: Time Domain Testing, Lightning

8.7.1 Introduction

This document addresses only the indirect effects of lightning, which deal with electrical transients resulting from the electromagnetic fields produced by lightning. At present, there is no STANAG that addresses verification of aircraft protection against the direct effects of lightning caused by attachment of the lightning channel to the structure.

To some extent, lightning has to be treated differently than the other threats as the coupling mechanism is different. The highest threat from lightning is that caused when the lightning directly couples into the airframe by virtue of the lightning using the aircraft as part of its discharge path. Free field coupling measurements described for RF threats and NEMP are therefore invalid. Full threat testing using the actual threat is also somewhat impractical. The techniques used to provide verification for lightning, and in common use, are centred around direct injection techniques using a return conductor system around the aircraft. Currents are then directly injecting in the airframe, between 1 kA and full threat (200 kA) using a test waveform representing the first return stroke (Current Component A) of the lightning waveform.

Issues regarding whether test levels approaching full threat are necessary or advantageous have not been settled. Valid points can be made supporting either, low level and high level testing. Scaling of low level testing is more conservative in some ways. Either approach can be technically supported. Lower level testing is the most common technique. Some of the issues are as follows:

a. Currents will redistribute due to surface flashover or other non-linearity's occurring at high current levels in the aircraft structure.

b. Equipment may be protected by non-linear semiconductor devices, which will change the nature of equipment cable bundle currents depending upon the levels to which they are stressed.

c. Testing using multiple pulses at high levels may introduce latent damage mechanisms in the test aircraft and introduce questions as to its reliability for field use.

8.7.2 Coupling Assessment/High Level Equipment Test Route (Steps 5-7)

For lower level assessments, the basic methodology for Steps 5 through 7 is the same as previous discussed. A ground plane as shown in **Figure 505-4** is sometimes used for performing low level characterisation of the aircraft. However, a return conductor arrangement as shown in **Figure 505-11** and described under Step 8 is preferred to produce more realistic current distribution. Either LLSC currents of the order of 10A are injected into the airframe over a frequency range of approximately 100 Hz to 100 MHz or low level, time domain waveforms are applied. The currents induced on the various cable bundles are measured and scaled to the lightning threat waveform using Fourier transforms and convolution techniques for LLSC or simple scaling for time domain. In some cases, “pin” voltages are measured at electrical interfaces with equipment. If demonstrated equipment hardness is not adequate, the scaled currents can then directly injected into the cable bundles on the aircraft using bulk current injection techniques via a current probe or by injection between the equipment case and ground depending on the injected waveshape.

8.7.3 Aircraft High Level Testing (Step 8)

The general setup to perform whole aircraft testing (whether high level or low level) to lightning indirect effects is described in this section. This is achieved by arranging the aircraft to be the centre conductor of a coaxial transmission line. The termination of the line would ideally be that of the lightning channel itself but this would require very large and powerful pulse generators to be used. As the dominant coupling arises from the passage of current through the airframe, the termination of the line is arranged to suit the requirements of the pulse generator to ensure that high levels of current with the required waveshape are produced. The outer shield of the coaxial line is formed by conductors such as aluminium plates or copper tubes placed along the chosen lightning path, such as nose to tail or nose

to wing-tip, following the contour of an equipotential magnetic field. The equipotential contour chosen is a compromise between the need to keep the conductors far enough away from the airframe to prevent flashover and the need to keep the inductance of the whole arrangement to that which can be tolerated by the pulse generator used.

One advantage of using tubes is that diagnostic wiring can be run in the tubes in what is a very quiet electromagnetic environment. A diagram of the test arrangement is shown in **Figure 505-11**.

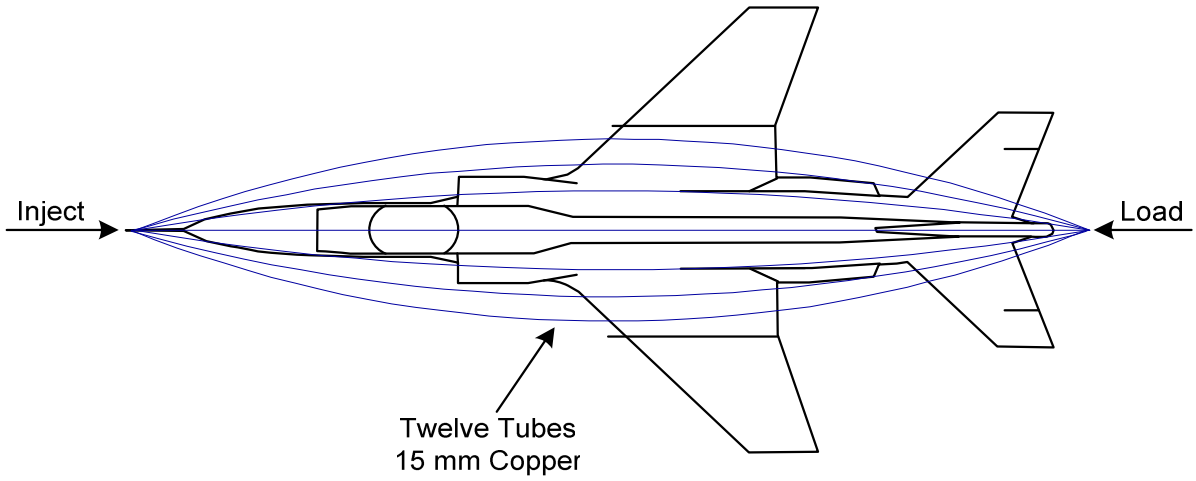

Figure 505-11 Plan View of a Lightning Return Conductor Rig

The portion of the aircraft which is enclosed by the coaxial return conductors depends on the current path between the likely lightning attachment points and the location of equipments and cable bundles along the current path. Common configurations would be nose to fin-tip or wing-tip for a fixed wing aircraft and nose to tail rotor or main rotor hub to skid/undercarriage for a helicopter.

A pulse generator for this work is usually a capacitor discharge system, often a high energy "Marx" arrangement with variable damping waveshape to be used which depends to a certain extent on the materials used in the construction of the airframe. Ideally the double exponential form of Current Component A defined in Ref [1] should be used. However, it is often difficult to reproduce the waveform and alternative waveforms are used. For a well bonded airframe constructed from high conductivity materials, the prime coupling will be due to field penetration through apertures and sufficient testing could probably be achieved by using either a damped sinusoid or a short double exponential pulse, providing both have the required rate of rise. If the airframe is constructed from poorly conducting materials such as Carbon Fibre Composite, then a double exponential waveshape with long fall time can be used. In both of these cases the wiring responses are extrapolated to full threat to give the correct peak currents, voltages and waveform.

9 Intra-System Electromagnetic Compatibility (EMC) Testing

Intra-system EMC requirements seek to ensure that the various onboard equipments are electromagnetically compatible among themselves. Verification of intra-system EMC through testing supported by analysis is the most basic element of demonstrating that E3 design efforts have been successful.

Although analysis is an essential part of the early stages of designing or modifying a system, testing is the only truly accurate way of knowing that a design meets intra-system EMC requirements. An anechoic chamber is desirable for system-level testing to minimise reflections and ambient interference that can degrade the accuracy of the testing and to evaluate modes of operation that are reserved for war or are classified.

The following list provides guidance on issues that should be addressed for intra-system EMC testing:

a. Potential interference source versus victim pairs should be systematically evaluated by exercising the subsystems and equipment onboard the system through their various modes and functions, while the remaining items are monitored for degradation.

b. A frequency selection plan should be developed for exercising antenna-connected transmitters and receivers. This plan should include:

   1. Predicable interactions between transmitters and receivers such as transmitter harmonics, intermodulation products, other spurious responses (such as image frequencies), and cross modulation. The acceptability of certain types of responses will be system dependent.

   2 Evaluation of transmitters and receivers across their entire operating frequency range, including emergency frequencies.

   3 Evaluation of electromagnetic interference emission and susceptibility issues with individual subsystems.

c. Margins should be demonstrated for explosive subsystems and other relevant subsystems.

d. Operational field evaluation of system responses found in the laboratory environment should be performed (such as flight testing of an aircraft to assess responses found during testing on the ground).

e. Testing should be conducted in an area where the electromagnetic environment does not affect the validity of the test results. The most troublesome aspect of the environment is usually dense utilization of the frequency spectrum, which can hamper efforts to evaluate the performance of antenna-connected receivers with respect to noise emissions of other equipment installed in the system.

f. Testing should include all relevant external system hardware such as weapons, stores, provisioned equipment (items installed in the system by the user), and support equipment.

g. It should be verified that any external electrical power used for system operation conforms with the power quality standard of the system.

Operational testing of systems often begins before a thorough intra-system electromagnetic compatibility test is performed. Also, the system used for initial testing is rarely in a production configuration. The system typically will contain test instrumentation and will be lacking some production electronics. This testing must include the exercising and evaluation of all functions that can affect safety. It is essential that aircraft safety-of-flight testing be done to satisfy safety concerns prior to first flight and any flight thereafter where major electrical and electronic changes are introduced.

A common issue in intra-system EMC verification is the use of instrumentation during the test. The most common approach is to monitor subsystem performance through visual and aural displays and outputs. It is usually undesirable to modify cabling and electronics to monitor signals to assess subsystem performance, since these modifications may change subsystem responses and introduce additional coupling paths. However, there are some areas where instrumentation is important. Demonstration of margins for critical areas normally requires some type of monitoring. For example, electro-explosive initiating devices require monitoring for assessment of margins.

Some antenna-connected receivers, such as airborne instrument landing systems and identification of friend or foe, require a baseline input signal (set at required performance levels) for degradation to be effectively evaluated. Other equipment that transmits energy and evaluates the return signal, such as radars or radar altimeters, need an actual or simulated return signal to be thoroughly assessed for potential effects.

The need to evaluate antenna-connected receivers across their operating ranges is important for proper assessment. It has been common in the past to check a few channels of a receiver and conclude that there was no interference. This practice was not unreasonable in the past when much of the potential interference was broadband in nature, such as brush noise from motors. However, with

the waveforms associated with modern circuitry such as microprocessor clocks and power supply choppers, the greatest chance for problems is for narrowband spectral components of these signals to interfere with the receivers. Therefore, it is common practice to monitor all antenna-connected outputs with spectrum analysis equipment during an intra-system electromagnetic compatibility test. Analysis of received levels is necessary to determine the potential for degradation of a particular receiver.

10 APPLICABLE DOCUMENTS

10.1 References

Ref 1	AECTP 258	Electrical / Electromagnetic Environment Conditions RF Electromagnetic Environments
Ref 2	AECTP 501	Electrical / Electromagnetic Environment Effects Tests and Verification– Equipment and Sub System Tests
Ref 3	STANAG 3856	Protection of Aircraft Crew and Sub Systems in Flight against Electrostatic Charges
Ref 4	AECTP 503	Electrical / Electromagnetic Environment Effects Tests and Verification– Ground Support Equipment Test Procedures
Ref 5		US National Institute of Standards Technical Report 1092

11 ACRONYMS

The following acronyms used in this category are:

BCI	Bulk Current Injection
COTS	Commercial-Off-The--Shelf
CW	Continuous Wave
E3	Electromagnetic Environmental Effects
EM	Electro Magnetic
EMC	Electromagnetic Compatibility
EMI	Electromagnetic Interference
EMICP	Electromagnetic Interference Control Plan
EMITP	Electromagnetic Interference Test Procedure
EUT	Equipment Under Test
FOL	Fibre Optic Link
HF	High Frequency
HIRF	High Intensity Radiated Fields
LEMP	Lightning Electro Magnetic Pulse
LLSC	Low Level Swept Coupling
LLSF	Low Level Swept Field
NAA	National Aviation Authority
NEMP	Nuclear Electro Magnetic Pulse
MNFS	Maximum No Fire Stimulus
RF	Radio Frequency

12 DEFINITIONS

The following definitions are applicable to this Category:

Electromagnetic Compatibility (EMC)

The capability of electrical and electronic systems, equipments and devices to operate in their intended electromagnetic environment within a defined margin of safety, and at design levels of performance without suffering or causing unacceptable degradation as a result of electromagnetic interference.

Electromagnetic Environment (EME)

The totality of electromagnetic phenomena existing at a given location.

Electromagnetic Environment Effects (E3)

The impact of the electromagnetic environment upon the operational capability of an aircraft electronic or electrical system, equipment or device. It encompasses all electromagnetic disciplines, including electromagnetic compatibility, electromagnetic interference, electromagnetic vulnerability, electromagnetic pulse, electronic countermeasures, hazards of electromagnetic radiation to ordnance and volatile materials and natural phenomena effects of lightning and p-static.

Electromagnetic Interference (EMI)

Any electromagnetic disturbance, whether intentional or not, which interrupts, obstructs, or otherwise degrades or limits the effective performance of electronic or electrical equipment.

Lightning Electromagnetic Pulse (LEMP)

The electromagnetic radiation associated with a lightning discharge. The resulting electric and magnetic fields may couple with electrical/electronic systems to produce damaging current and voltage surges.

Nuclear Electromagnetic Pulse (NEMP)

The electromagnetic radiation caused by Compton-recoil electrons and photoelectrons from photons scattered in the materials of the nuclear device or in a surrounding medium as a result of a nuclear explosion. The resulting electric and magnetic fields may couple with electrical/ electronic systems to produce damaging current and voltage surges.

Mission Critical

A characteristic or function of an equipment or system in which a failure can cause the task or operation demanded from the material to be abandoned or severely impaired.

Precipitation Static (p-static)

Electrostatic charging of the vehicle from tribo-electric effects, engine ionization, and cross-field gradients. EMI effects introduced by exhaust gas discharges from extremities, corona off non-metallic surfaces, and arcing between poorly bonded joints or panels.

Safety Critical

A characteristic or function of an equipment or system in which a failure or malfunction may cause a direct hazard to personnel and/or loss of materiel.

Safety Margin

The difference expressed in dB between the interference susceptibility threshold and the actual/expected interference level which exists at the place of influence.

CATEGORY 506

SEA PLATFORMS AND SYSTEMS ELECTROMAGNETIC ENVIRONMENTAL EFFECTS TEST AND VERIFICATION

1 SCOPE 506-3

2 AIM 506-3

3 GENERAL REQUIREMENTS 506-3

3.1 Emission Information: 506-3
3.2 Susceptibility Information: 506-3
3.3 Test Precautions: 506-4
3.4 EM Characterization Testing: 506-4

4 E3 TEST AND VERIFICATION PROGRAM 506-5

4.1 Power Quality 506-5
4.2 Background Noise 506-6
4.3 Field Strength Inside and Outside of the Ship's Hull 506-9
4.4 Mutual Interference of the Ship's Top Deck Transmitters and Receivers 506-10
4.5 Radiating All Ship Transmitters 506-11
4.6 Ship Hull Attenuation 506-14
4.7 Spectrum of the Transmit System 506-15
4.8 Radiation Patterns of the Ship's Communication Antennas 506-15
4.9 Specification of Communication Antennas 506-15
4.10 Susceptibility to Pulsed Environments (NEMP and LEMP) 506-16
4.11 Radiation Hazard Survey 506-16
4.12 Interference Report 506-17
4.13 Test and Survey Certification 506-19

5 DETAILED REQUIREMENTS 506-19

5.1 Shielded Cables 506-19
5.2 Earthing / Grounding of the Cable Screening / Shields 506-20
5.3 Cable Glands or Stand Pipe Bonding 506-20
5.4 High Power verses Low Power / Sensitive Cable Separation 506-21

6 APPLICABLE DOCUMENTS 506-25

6.1 References 506-25

7 ACRONYMS 506-26

8 DEFINITIONS 506-27

FIGURES

Figure 506-1 Emission Limits for Top Side Ambient RF Environment 506-24
Figure 506-2 Set-Up Testing Cable Penetration 506-24
Figure 506-3 Separation Distances between Cable Categories 506-25

TABLES

Table 506-1 Measurement Bandwidth Settings 506-22

Table 506-2 Unintentional Emissions Classifications 506-22

Table 506-3 Phase 2 Electronic Equipment Test Categories 506-22

Table 506-4 Cable Categories Emission / Immunity Rating 506-23

CATEGORY 506

Sea Platforms and Systems Electromagnetic Environmental Effects Test and Verification

1 SCOPE

This category provides guidance, specific requirements, and detailed procedures for conducting "whole' ship electromagnetic interference (EMI) testing of NATO ships and small crafts.

EMI testing characterizes the electromagnetic (EM) signature of new construction ships and ships receiving major repair or overhaul work that changes its electromagnetic environment.

Electromagnetic Compatibility (EMC) considerations and performance specifications should be directed toward determining the ships EM behaviour, considered as one system.

Information on platform and systems EMI susceptibility is required for spectrum management and safety procedures.

2 AIM

The aim of this category is to characterize the ship's electromagnetic parameters. This is necessary for the following items:

a. The ship's EM susceptibility, considered in an integral way, including Weapons, Communications, and Platform systems. This information is necessary to achieve shipbuilding design that considers EMI as an overall operational requirement.

b. Optimize NATO operations by minimizing inter-ship EMI.

c. Ensure all installed electrical/electronic equipment and systems, including newly installed systems, are self-compatible as well as compatible with the environment.

3 GENERAL REQUIREMENTS

Ship EM characterization requires analysis and testing which contains information on both susceptibility and emission of ship equipment, systems, and of the overall ship platform.

EMI/EMC Program efforts should include obtaining the AECTP 501 [Ref 1] equipment level EMI test results to determine susceptibility and emissions of equipment that will be installed on the ship as follows:

3.1 Emission Information:

a. Emission frequencies and field strengths of radiated EM field tests from equipment.

b. Emission frequencies and current or voltage levels of conducted EMI from equipment.

c. Field strengths generated by communication and radar antennas.

d. Field strengths generated by equipment in the different areas, both above and below deck.

e. Currents induced on cables running in inner and outer deck areas, induced by conducted emission or radiated emission.

3.2 Susceptibility Information:

a. Susceptible frequencies and field strengths of exposure to radiated EM fields including Thresholds of Susceptibility.

b. Susceptible frequencies and current or voltage levels of exposure to conducted EMI.

c. Susceptibility to spikes or transients due to radiation (NEMP, LEMP, etc.) or conduction (voltage spikes, etc.) and at which peak values.

Other useful information includes spectrum certification by national standards or processes that allow legal operation of the transmitting equipment. This information is used for:

d. EMC Design Evaluation.

e. Topside Design Modelling and Evaluation.

f. Electromagnetic Pulse (EMP) Hardness.

g. Determining RADHAZ Areas (HERP, HERF, HERO).

h. Determining loss of sensitivity of receiving antennas.

i. Installation Criteria and Rules.

j. Spectrum Management.

k. Hard Kill / Soft Kill (HK/SK) Parameters.

Shipboard testing should be performed during new ship Sea Acceptance Tests (SAT). Some tests can be selected for controlling the ship's EM characterization during its lifetime, such as during retrofit of new equipment.

Urban areas may restrict radiation of high-powered systems, including HF communications (> 500 Watts) and Radar (> 1000 Watts). Testing of shipboard emitters must be consistent with local spectrum policy, and generally requires underway testing.

3.3 Test Precautions:

Certain tests precautions and environmental controls are required to ensure test validity/repeatability:

a. Location of the ship:

   1. No cranes closer than 50 metres.

   2 All cranes in close proximity (50 – 75 metres) must have the boom(s) stowed.

   3 No large metallic structures close to the ship such as rigging or scaffolding.

   4 No ships berthed adjacent or next to the ship under test.

b. Emission Control (EMCON) set.

c. Man Aloft may be required for visual survey

d. Health and safety criteria during transmitting and other safety critical tests.

e. Operational situation on board.

f. Ship's force participation in actual testing and operation of systems involved in testing.

g. Communication during the tests.

3.4 EM Characterization Testing:

Testing needs to be planned and co-ordinated with all participating personnel to ensure optimum use of dockside and underway test time.

A Test / Trial Plan needs to be prepared listing specific equipment by nomenclature, location, operating frequencies and operating mode to be tested. Equipment to be tested and monitoring positions should be determined to assist in establishing an estimated time requirement for completing the total survey.

At the conclusion of the testing, a Test / Trial report shall be prepared; see **Clause 4.12**. Test / Trial Reports should provide sufficient information to determine the following:

a. Test data and summary of test data in graphical forms, if necessary for clear presentation.

b. Test conclusions and recommendations.

c. The cause and severity of any interference detected.

d. Options for reducing or eliminating any interference.

e. Estimated manpower and materials required for any changes recommended, and any effects on ship scheduling.

f. The responsibility for any additional work or material required; see **Clause 4.12.3**.

4 E3 TEST AND VERIFICATION PROGRAM

Before commencing the actual tests and verification program, the installation of cables and equipment should be checked for good EMC installation design, and equipment operation verified to ensure a successful ship test program.

To determine complete ship electromagnetic characterization the E3 Test and Verification Program should address the following:

a. AC/DC Power Quality

b. Background Noise Levels (Ambient)

c. Field Strength Inside and Outside the Ship's Hull

d. Mutual Interference of the Ship's Top Deck Transmitters and Receivers

e. Radiating all Ship Transmitters

f. Ship's Hull Attenuation

g. Spectrum (Frequency Range) of all Transmit Antennas

h. Field Strengths Inside and Outside the Ship's Hull

i. Radiation Patterns of the Ship's Communication Antennas

j. Impedance Measurement of Communication Antennas

k. Susceptibility to Pulsed Environments (including NEMP and LEMP)

l. RADHAZ Zones

All tests are implemented in a test / trial procedure specifically prepared for a platform, taking into account specific environment, equipment specifications, platform missions, and operational priorities. When performing measurements, test / trial procedures shall include method, locations, equipment, frequencies, etc.

During the tests on Field Strength Inside and Outside of the Ship's Hull, and Ship's Hull Attenuation and Susceptibility to Pulsed Environment tests, the weak points in cables and cable penetrations in the platform hull can be identified. This can also be performed by injecting a signal on an individual cable at one side of the cable penetration, and measuring the response at the other side. The difference of both signals is a measure of the quality of the gland and installation, (the connection of the screening to ground).

4.1 Power Quality

Shipboard power should meet the requirements of STANAG 1008 [Ref 2].

Due to voltage and power switching operations, uncontrolled power fluctuations, transients, and spikes can occur. Equipment connected to ships power should be able to withstand these fluctuations, transients, and spikes within established specifications. During the platforms first trials, check the

complete power generation and distribution system. Install monitors in the main switching board, distribution cabinets, transformer stations, and at locations of power control equipment.

Monitors must remain in place for sufficient time to ensure the power information collected provides an adequate sample of the variations expected under normal operational conditions, such as switching with heavy cranes, radars, and other equipment. During and after these operations, power should still fulfil the limits specified in [Ref 2]. This testing need only be performed on the first ship of a ship class.

4.2 Background Noise

Shipboard equipment can produce radiated emissions, which can interfere with receiving systems. To provide an indication of the platform RF environment ambient noise measurements need to be made at several locations around the platform. This provides information about sensitivity degradation of receiving systems. Additional system information can be determined when measurements include the receiving system, for example the antenna cable and receiver input.

When the receiver system degradation exceeds the required limits, the source(s) of the noise needs to be investigated to determine if radiated interference can be limited or reduced.

This test is developed over phases and should be performed at a location with a low background noise in the following sequence:

a. Phase 1 testing: The ship should be as silent as possible but electrical/electronic equipment shall be turned on but not placed in transmit mode during Phase I testing. Communications equipment shall be on and not keyed. Radars shall have antennas rotating but not radiating. Other ship electronic systems will be activated to mode which does not cause them to radiate out the antenna.

b. Phase 2 testing: All topside and below deck transmitters and receivers shall be operated to present the normal operational electromagnetic environment when the ship is at least 90 kilometre from shore.

The Phase 1 test includes measuring electromagnetic emissions from specified, installed (non-portable) electrical equipment within specified shipboard areas to determine whether these emissions are potential interference sources to the ship's electronic systems. In addition, Phase 1 tests determine the susceptibility of equipment/systems to ships portable communication transmitters. Phase 1 tests shall be performed at a time and location when the external local man-made electrical and natural RF ambient environment does not exceed the levels in **Figure 506-1** over the frequency range of 2 MHz to 460 MHz using **Table 506-1** bandwidths.

4.2.1 Electrical Equipment Requiring Background Noise Testing

4.2.1.1 Preliminary Examination (Phase 1)

Prior to executing the background noise testing an examination shall confirm that:

a. Bonding, grounding, and other techniques for EMC and safety have been accomplished

b. Applicable multi-couplers, filters and blankers are installed and operating

c. There are no missing or visibly defective electronic equipment or broken or missing antennas/transmission line.

d. Topside areas Correct any deficiencies discovered during examination prior to testing.

Deficiencies discovered during the examination shall be corrected prior to starting measurement testing.

4.2.1.2 Non-Metallic Hull Ships

Except as specified in **Clause 4.2.1.5** all electrical equipment located in both topside and non-topside areas of non-metallic hull ships for electromagnetic emissions need to be tested.

4.2.1.3 Metallic Hull Ships

Except as specified in **Clause 4.2.1.5**, all electrical equipment located in metallic hull ships for electromagnetic emissions only require testing under one or more of the following conditions:

a. When located in topside area.

b. When located in a compartment having a door opening onto a weather deck or when located in a compartment which is separated from a weather deck by a non-metallic bulkhead(s) or deck(s).

c. When located in a compartment designated as an 'electronic' space.

d. When located in a compartment adjacent to (included above and below) compartments specified in (c), or when located in a compartment which is separated from the compartment specified in (c) by a non-metallic bulkhead(s) or deck(s).

4.2.1.4 RF Sensor-Type Equipment

RF sensor-type equipments are any device that senses or receives the electromagnetic spectrum from 2 MHz to 460 MHz topside (MF, HF, VHF, UHF) and 2 MHz to 6 GHz below deck, which includes receivers in fixed and mobile devices below deck, mobile wireless systems, Radio Frequency Identification Devices (RFID) readers/transceivers (except those attached to ordnance), wireless data links, all of which may be susceptible to unintentional RF emissions from electrical/electronic equipment and systems. For ships undergoing a modernization/overhaul, only those sensors that may be impacted by changes affected during the modernization/overhaul need be measured.

4.2.1.5 Exceptions

Electrical equipment, such as alternating current (ac) motors which do not contain a commutator, slip rings, or variable speed controllers, are inherently free of interference and do not require testing. In addition, portable electrical equipment, transformers, heat-element types of equipment, ac outlets, connection boxes, and switch boxes do not require testing.

4.2.2 Testing for Unintentional Emissions

Unintentional emissions tests shall be performed at a time and location when the external local man-made electrical and natural RF ambient environment does not exceed the levels in **Figure 506-1** over the frequency range of 2 MHz to 460 MHz using **Table 506-1** bandwidths. When the unintentional emissions exceed 10 dB to the sensors receiver noise floor, source location techniques shall be used to isolate and ultimately mitigate the excessive emissions. Unintentional electromagnetic emissions from electrical/electronic equipments shall be measured from all electrical/electronic equipment. Electrical/electronic equipment shall be turned on but not placed in transmit mode during testing. Communications equipment shall be on and not keyed. Radars shall have antennas rotating but not radiating. Other ship electronic systems will be activated to mode which does not cause them to radiate out the antenna.

4.2.2.1 Unintentional Emissions Test Method

Measure the Unintentional EM emissions from electrical equipment as follows:

a. Select receiver. Select a sensitive scanning receiver, such as a spectrum analyzer so that the complete test configuration shall have an equivalent noise figure of no more than 30dB at 25 degrees centigrade for bandwidth and frequency(s) defined in **Table 506-1**. The analyzer will interface with the sensor type equipment/systems to measure RF equipment/systems unintentional received emissions. **Table 506-1** specifies the resolution bandwidth (RBW) and sweep rate to be used over each frequency range to measure the select sensors.

b. Selected RF sensors. With the unit under test de-energized disconnect the selected sensor antenna from the equipment/system and patch into the sensor antenna with the input lead to the test equipment to measure the reception of unintentional RF emissions on the selected

receiver. If a sensor cannot be monitored, the procedures of 4.2.2.1.g shall be used to evaluate the RF ambient in the area of the sensor in question. Connect the test equipment to each sensor antenna prior to any couplers, filters, attenuators and etc, but after any matching units.

c. Test Equipment Set-Up. Set the test equipment utilized for test so the scanning receiver utilized has the same or greater sensitivity as the system under test, with the span of the scanning receiver set to no greater than (200 x RBW), set for peak detection mode, and sweep time as indicated in **Table 506-1**. Video filtering shall not be used to bandwidth limit the receiver response. If a controlled VBW is available on the measurement receiver, it shall be set to its greatest value. The use of Low Noise Amplifiers (LNA) is acceptable to obtain the required dynamic range of test receiver utilized. Change equipment settings as necessary to enhance test equipment selectivity in such a manner that it will improve the ability to resolve the source of potential interfering signals from unintentional emissions. Record data for both the new test configuration, as well as the initial test configuration. The use of 'Peak Hold' on the test equipment ensures collection of transient signals and ensures a more thorough analysis. Save the data for analysis and classification.

d. Analysis of Data. Analyze and classify the data collected

1. Analyze data for indications of unintentional emissions

i) When an interfering signal is detected during testing, indicate in the test data sheets whether a system filter or coupler would remove the detected interfering signal

ii) Harmonic emissions and emissions at specific frequencies shall be noted for classification

2. Classify unintentional RF equipment/system. **Table 506-2** lists the classifying categories of potential degradation measured by the test equipment. All unintentional emissions shall be located, documented and evaluated during testing to determine their impact on the equipment's operational performance. All test equipment displays and readings shall be saved in a format which is compatible with common government word processing and spreadsheet software to enhance analysis and distribution of information. Analyzer trace data shall be saved in a format which will allow import into spreadsheets and contain both analyzer configuration and trace data. The test data sheets shall include clear and concise description of equipment under test, the jack or circuit where test equipment was connected, sketches of test equipment configurations and file names of the data collected during the testing of individual systems.

e. Continuation of tests. Repeat steps 4.2.2.1.b through 4.2.2.1.d for each RF sensor equipment/system installed in the frequency range as in accordance with 4.2.2. Once completed, documented, and classified, source location shall be carried out for any Category I or II unintentional emissions detected.

f. Source location. Isolate the offending equipment(s)/system(s) in the frequency range which contained medium to severe RF noise using one or more of the following methods.

1. Analyze data for indications of unintentional emissions

i) Monitor the affected RF sensor with test equipment and sequentially switch suspected equipment/systems on/off, observing the unintentional emissions measurements. If unintentional emissions drop significantly when an equipment/system is shut down, the equipment/system should be noted in the test report for further analysis/action.

ii) Place a receiver antenna in suspected spaces in order to localize the offending spectrum resulting in unintentional emissions observed as medium to severe. In each of the select spaces, the nomenclature/model of the

antenna and receiver utilized to measure the spectrum shall be noted, whether or not unintentional emissions was detected.

iii) For locating equipment/systems/cables in spaces where similar unintentional emissions, as detected in 4.2.2.1.c, is found, a near field probe can be used to scan equipments/cables in select spaces. The near field probe should have adequate sensitivity to find the source of highest emissions that resembles the characteristics of the medium to severe unintentional emissions. The nomenclature/make and model of the receiver, near field probe and offending emissions shall be recorded.

iv) If other techniques of source location are used, provide sufficient documentation and reporting to permit others to duplicate the test.

g. Alternative RF sensor measurement. When an RF sensor cannot be directly monitored, as in a hard wired sensor to equipment or integrated antenna that cannot be disconnected, the ambient level maybe monitored in the RF sensors location. The RF sensor system shall be shut down when performing this test, and all other below deck equipment must be energized. The test set up shall be configured to have the same sensitivity as the system under test. Using the calibrated antenna in the RF sensors frequency band, and polarization identical to RF sensors, place the antenna in close proximity (≤1 meter) from the sensor, and using the same analyzer outlined in 4.2.2.1.a, along with **Table 506-1** bandwidth and settings, measure the RF ambient over the sensors required bandwidth plus and minus one bandwidth. If the test antennas directivity is less than the RF sensor antennas directivity then the test antenna shall be moved in increments of its beam width to cover the same beam width of the RF sensor antenna. Document the results in the test report noting antenna used RF sensor location relative to antenna, and unintentional emissions evaluation criteria, 4.2.2.1.e. If an unintentional emission is detected, source location in accordance with 4.2.2.1.f shall be used to isolate the offending equipment/system causing excessive emissions.

4.2.3 Testing Susceptibility of Installed Equipment/System to Portable Transmitters

Testing installed equipment/systems to susceptibility of portable RF transmitters can be performed as follows:

a. Identification of non-operational equipment. Note the nomenclature/model of any equipment/system in the space that is not operational

b. Transmitting RF. Key own ship portable radio(s) at its maximum operational power level, within 18-inches of the specific electrical/electronic equipment/system/sensor being evaluated, while the electrical/electronic equipment/system/sensor is in its normal operational condition. For large equipments, move the radio across the entire surface and rotate the radio to apply both horizontal and vertical polarities.

c. Identify results. If no susceptibility is noted return to 4.2.3.b until all electrical/electronic equipment/system/sensors have been tested in each space aboard the ship where the portable RF transmitter/transceiver will be utilized.

d. Action required. If susceptibility is identified, move the transceiver away from the victim equipment/ system/sensor until there is no susceptibility or reduce the transmitted power of the transceiver until there is no indication of susceptibility. Record the susceptibility indication and the distance/power level where susceptibility is eliminated. Return to 4.2.3.b until all electrical/electronic equipment/system have been tested.

4.3 Field Strength Inside and Outside of the Ship's Hull

Modern military ships contain a multitude of transmitting antennas. All these antennas produce an electromagnetic environment in which equipment above deck as well as below has to work effectively.

Above deck equipment and equipment in a non-metallic hull ship are installed in an unprotected environment.

In a metal hull ship the below deck equipment is normally located in a protected environment.

It is therefore important to know in which EME the equipment is required to operate correctly.

To obtain this information two types of measurements are required. First the field from the ships own transmitters. Secondly as the transmitter will illuminate the complete platform, an antenna needs to be in the far field to measure the EME. Additional information is provided as follows:

a. The ship's own transmitters: The shipboard transmitters need to be operated in their intended modes of operation over their full frequency range. Measurement data for both topside and below decks is required. Use calibrated test equipment and a data collection antenna with known gain and antenna factors to record the data. Clause 4.11 provides additional guidance when testing includes radiating all shipboard emitters.

b. Testing ambient and the operational EMEs: A transmit antenna is placed in the far field as defined by equation 1 (See also AECTP 258 Annex B [Ref 3]. The normal frequency range required is from 2 MHz to 1 GHz, but frequencies higher than 1 GHz can also be of interest depending on application and expected operating areas. Before testing begins, a detailed test / trials plan is required. This must include the test frequencies and frequency range, the measurement locations inside as well as outside, test amplitudes, operational modes of shipboard equipment and test instrumentation equipment used.

$$R = (2 * L^2) / \lambda \qquad \text{Equation 1}$$

Where: R = distance (metres)

L = maximum dimension of the antenna (metres)

λ= wavelength (metres) = 300 / Frequency in MHz

It is recommended that this information be maintained in a database for future projects. Below deck field strengths provide immunity/susceptibility specification levels for equipment installed in that area. It can also be used in establishing installation policy. Installation policies are applied to cables penetrating ships hull or electronic compartments to minimizes the field inside the metal hull ship and provide an acceptable EME to prevent interference problems.

Limit Specification

The field strength inside the ship (below deck) should not exceed 10V/m over the frequency range 2MHz to 40GHz except for the Bridge and Hangar interiors.

4.4 Mutual Interference of the Ship's Top Deck Transmitters and Receivers

It is difficult to prevent system interference due to the number of transmitting and receiving antenna systems on the top deck. Systems that radiate/receive in-band and near-band with other systems require spectrum planning and precise antenna location and design to control radiation patterns. To determine inter-systems interference and mitigation techniques, mutual interference tests need to be performed.

A source-victim EMI matrix should be used as the basis for this test. The matrix includes all possible EMI between platform systems. This can be front door (between antennas) as well as back door (between an antenna and susceptible equipment components or shield limitations) EMI. The EMI matrix should be prepared during the design phase and the integrated topside design phase. During the design phase the locating and relocating of the different antennas and sensors on the topside will use this matrix.

During testing it is essential to maintain control over the operation of the different radar, communication, and EW systems. During the normal operation of the specific system, all other victims will be controlled. A detailed description of any interference must be recorded.

Additional measurements/tests will need to be performed, if deemed necessary, to completely characterize the interference and system impact. For example, the Intermediate Frequency (IF) signal of the victim radar can be measured during exposure by another radar. When interference is encountered interference mitigation techniques such as filtering, frequency management, and antenna relocation need to be investigated. In Clause 4.5 additional guidance for testing all shipboard emitters are described. **Clause 4.12** provides guidance on recording and reporting test results.

NOTE: Systems and equipment installed on a ship can be susceptible at specific frequencies. These frequencies can be found by performing system immunity measurements in the laboratory. The generated field should be the normal field strength produced by the ships own transmitters and/or transmitters of another platform plus a safety margin multiplication factor of 10.

This test determines which systems in the ship are susceptible. Precautions can then be taken to achieve immunity to those specific signals and frequencies.

4.5 Radiating All Ship Transmitters

Testing identified in **Clauses 4.3** and **4.4** require radiating all onboard emitters. This testing (Phase II) consists of operating active electronic equipment within a specified category (see **Table 506-3**) while receivers and other susceptible equipment in the same category are monitored for electromagnetic interference and determining field strength within the ship. Electrical equipment that exceeded emission limits of **Figure 506-1** during RF background noise testing shall also be tested for compatibility with electronic systems.

4.5.1 Preliminary Examination

Conduct a visual examination prior to activating radiating equipment to understand the conditions that are likely to have adverse effects on the test results. The examination shall confirm that:

a. Bonding, Grounding, and Shielding EMC Techniques have been accomplished.

b. Multi-couplers, Filters, and Blankers (where required) are installed and operating.

c. There are no missing or visibly defective electronic equipment or broken or missing antennas.

d. All loose metallic items that are not normally part of the ship have been removed from the topside areas. Correct any deficiencies discovered during examination prior to testing.

4.5.2 Planning for System to System EMI Testing

Planning for system-to-system EMI testing shall begin well before the testing commences and shall include identifying the ship's topside antenna arrangement, ship's electronic system inventory, and the operating and intermediate frequencies of all installed RF transmitter and receiver systems. Verify prior to Phase II testing that the systems to be tested meet minimum operational specifications. If the system does not meet its operational specifications then the test director shall document in his report that system was not available for test and that Phase II testing could not be completed as required. Testing shall not be reported as completed until all systems are tested

4.5.3 Personnel Safety

Observe all safety precautions and operating procedures relating to the radio-frequency radiation hazards (RADHAZ) and radio frequency burn hazards while electronic antennas are energized.

4.5.4 Test Area Ambient

If feasible, locate the ship in an area where the ambient electrical noise level and off-ship transmitter signal levels do not exceed the levels specified in **Figure 506-1**.

4.5.5 Transmitting Frequencies

In advance of conducting the test, sufficient frequencies to cover all communication transmitter frequencies, in approximately 10 percent steps, for Phase II testing shall be requested from the area frequency coordinator. Transmitter test frequencies for HF IMI testing shall be used for system-to-

system testing. Radar, Tactical Air Navigation (TACAN), and weapons systems shall be operated on their normal frequencies, while multi-channel system transmitters shall be operated at frequencies that are selected neither to minimize nor to intensify interference to other systems. If a change in transmit frequency changes the interference situation, this condition shall be noted. Two HF receivers and at least one UHF receiver, respectively, shall be selected to monitor HF and UHF ranges during transmitter tests to include harmonics of selected frequencies.

4.5.5.1 High Frequency (HF) Receiver Selection

Select two HF receivers to monitor the HF frequency range during HF transmitter tests. When possible, select receivers that are capable of continuous tuning in preference to step-tuning. Connect one receiver to a receiving antenna near the HF transmitting antennas, and connect the other receiver to an antenna remote from the transmitting antennas. Tune both receivers throughout the HF frequency range and search for interference in the form of overloading, arcing in the ship structure, or inter-modulation.

Select other HF receivers to use as fixed-frequency monitors. The number of fixed frequency receivers should equal the number of HF transmitters energized. Tune these receivers to fleet broadcast from, NIST Radio Station WWV, or other signals that are steady and free of interference. The frequencies selected should be representative of normal ship receiving frequencies and provide a good sampling of various types of modulation. The frequencies should be spaced across the bands and meet frequency separation requirements of the equipment involved. If crowded band conditions make it impracticable to tune to interference-free signals, then select less desirable frequencies including those free of any transmissions

4.5.5.2 Receiver Sensitivity

Check each receiver used prior to testing to ensure its sensitivity meets the applicable requirements of the testing standards or equipment technical manuals.

4.5.5.3 Receiver Gain Setting

Use the maximum practical sensitivity (maximum RF gain) control setting that does not cause receiver overload when testing. If interference is detected, reduce the RF gain setting to ensure that receiver overload is not the cause of the interference.

4.5.5.4 Channelized UHF Receiver Tuning

When using channelized UHF receivers as monitor receivers, tune the receivers to a minimum of 36 frequencies spaced not greater than 5 MHz apart. When the potential interference source is a scanning beam (mechanically or electronically), monitor each frequency for a time exceeding the beam scan period.

4.5.5.5 Receiver Protective Devices

During each test, use all receiver protective devices such as bandpass filters, notch filters, multi-couplers, and blankers that are installed and normally specified for use with the receiver under test. In cases where the use of manually tuned filters and multi-couplers makes it impossible to rapidly tune a wide frequency range, it is permissible to bypass the filter or multi-coupler temporarily while an interference search is being made. If interference is encountered, reconnect the filter or multi-coupler to determine if it will reject the interference. If the signals(s) under investigation are rejected, it is not interference and does not require further investigation.

4.5.5.6 Active Equipment (Transmitter) Selection

Select and energize transmitting equipment in accordance with **Table 506-3**. Select equipment to transmit within each frequency category specified. Also select and operate at least one of each

different type of transmitting equipment within the same frequency category. Additionally, each ship transmitting antenna should be used at least once during testing. Operate all transmitters at maximum rated power during testing

4.5.5.7 Transmitter Test Equipment

Select transmitter test frequencies that are typical of the ship operating requirements. Adhere to frequency separation requirements for the specified transmitters, multi-couplers, and antennas.

4.5.5.8 Transmitter Modulation

To readily identify interference sources, modulate transmitters with an easily recognized signal, such as multiplex, Frequency Shift Keying (FSK), voice, teletype, or test tone.

4.5.5.9 Transceiver Selection

If a group transmitter tests involve primarily transceivers, operate 75% of the transceivers as transmitters and the remainder as monitor receivers.

4.5.5.10 Transmitter Multi-Coupler Test

Conduct a special test on each transmitter multi-coupler. Use the maximum number of transmitters connected to the multi-coupler with each transmitter operating at maximum power. This test determines compatibility of the complete transmitter-multi-coupler-antenna system.

4.5.6 Radar Receivers

Radar receivers shall be operated with normal gain control, video selection, processing mode, and receiver bandwidth settings. While most radars have digital video signal processing, the raw video signal of the radar shall be monitored while radiating HF, VHF, and UHF at the IF frequency of the radar receiver.

4.5.7 Monitor Ship Control Systems

Monitor ship control systems during normal underway operations while electrical machinery, such as fuel/lube oil pumps, cooling fans, fire pumps, motor controllers, contact relays, and air compressors are being operated and cycled. Functions to be monitored shall include, but not limited to:

a. Alarm Panels

b. Tank Panel Indicators

c. Pressure Indicators

d. Flow Rate Indicators

e. Interior Voice Communications

f. Video Monitors

g. Below Deck Wireless Sensors

h. Other Suspected Victim Equipment

It is particularly important that the specific ship's operating evolutions and transmitter status at the time EMI is noted be fully documented

4.5.8 Interference from Ship’s Superstructure

All false targets shall be documented by recording their range and bearing as observed on the indicator display, and any unintentional emissions interference effects shall be documented by describing the observed interference effects.

4.5.9 Test procedure All Up System to System EMI Testing

All up system-to-system EMI testing involves sequentially radiating all ship's transmitters starting from the highest frequencies while monitoring all ship's electrical/electronic systems to identify changes in system performance caused by EMI. After a transmitter is sequentially radiated, the equipment shall remain in the radiate condition until the end of the test. The transmitters shall be operated at maximum rated power and shall be exercised in each expected operational mode, channel or frequencies to explore victim vulnerability. Particular emphasis shall be placed on potential source/victim combinations identified during test planning. When EMI is noted, shut down or secure the specific transmitter to verify the EMI disappears, allowing a determination (tentative) of the potential EMI source.

4.5.10 Hull Generated Intermodulation Interference Test

This test is performed on ships that have six or more HF communication transmitters installed. This test consists of operating two HF transmitters (at frequencies F1 and F2) and monitoring an HF receiver tuned to the 3rd order intermodulation frequency, (2F1 +/- F2) or (2 F2 +/- F1). Transmit frequencies should be selected so that the 3rd order intermodulation frequency falls within the HF frequency range, preferably in the lower half of the band. In addition, select transmit frequencies that are not harmonically related. Maintain proper frequency separation between the transmit frequencies and the resultant 3rd order intermodulation frequency to prevent monitor receiver overload. Operate both transmitters at maximum power and connect to separate antennas that provide maximum deck radiation coverage. Couple the receiver to an antenna centrally located on the ship. The level of 3rd order intermodulation interference should be determined by observing the receiver signal level meter, then substituting a signal generator at the receiver antenna terminals and adjusting the generator for the same signal level. Record the generator signal level in terms of microvolts or decibel (dB) above 1 μvolt. Include information details relative to the intermodulation test in the EMI Testing Report including

a. Frequency, Power and Type of Transmitter(s) used.

b. Type of Receiver Used

c. Description and Location of all Antennas Used

d. Frequency and level of the 3rd Order Intermodulation Interference

4.6 Ship Hull Attenuation

The metal hull of the ship, in combination with the national or shipyard installation policy, minimizes the EME inside the ship. To control this, and to investigate any weak points of the hull, the attenuation figure is important. Weak points typically include cable penetrations, windows and doors. Cables that penetrate the ship's hull which aren't installed properly decline the ship hull attenuation. To make certain that the cable penetration complies with the required specification a test can be performed. **Clause 5.3.5** provides a test procedure for testing cable penetrations.

The ship hull attenuation can be determined by measuring the EM field levels both outside and inside the platform. The difference between these measurements provides roughly the screening attenuation of the hull.

Before measurements take place, a test plan should be prepared, and should include frequencies to be tested and measurement locations inside outside the ship's hull.

The attenuation figure(s) can be used for calculating the fields inside the hull for given external field level, and provide field level baselines which shipboard equipment will be exposed to. This information is also relevant for future projects to specify equipment with respect to EMI/EMC.

4.7 Spectrum of the Transmit System

Verification that transmit systems meet national spectrum certification requirement can be divided into two parts; Communication systems with associated antennas (up to 500 MHz) and Radar systems with associated antennas:

a. Communication Systems: Communication system spectrum should be within the national (e.g. ITU, FCC, NTIA, etc.) regulations or specifications. With the platform positioned as detailed in **Clause 4.8**, measure the spectrum of all relevant transmit antennas. Measurements should include spurious and harmonic levels. Determine equipment specification compliance by comparing measured data with national regulations.

b. Radar Systems: Radar antenna spectrum (including side lobes, spurious responses, etc.) should meet manufacturer specifications. With the platform again positioned as in **Clause 4.8**, measure all relevant radar spectrums. Determine equipment specification compliance or mechanical/electrical failures by comparing measured data with manufacturer's specification.

4.8 Radiation Patterns of the Ship's Communication Antennas

Many communication antennas are located on a ship's upper decks and mast areas. Due to the limited availability of space, antenna locations are always a compromise because it is not possible to place every antenna in a position that results in no interference to or from other systems. Antenna design and position, nearby metal structures, and frequency dictate antenna radiation patterns. During the platform design phase, radiation pattern predictions will be computed using a computer model, a scale model, or both. The actual measured data obtained after ship construction is used to validate scale/computer model predictions.

Radiation pattern measurements are performed by rotating the platform on its own axis at a far field distance from the test antenna, or by moving the test antenna around the ship in the far field. When the ship's antenna transmits, the test antenna will monitor the received power level. Antenna patterns are measured over the complete frequency range for all communication antennas.

When the measured antenna pattern dips or nulls are too deep, and do not meet specification performance, other locations can be investigated for that specific antenna. The value of good modelling is demonstrated by the reduction in antenna movement to new locations after actual ship testing.

Antenna pattern data is also an important part of operational communication capabilities. While the ship is underway, the appropriate antenna/frequency combination provides optimum communication at maximum distance, regardless of direction. The antenna pattern information must be in the ship's frequency management plan.

4.9 Specification of Communication Antennas

The most important specification of a communication-transmitting antenna is its impedance, i.e. its Voltage Standing Wave Ratio (VSWR). Impedance mismatches increase reflected power and reduce radiated power. This is relevant to the ship's broadband antennas. Antenna impedance should be matched over a wide frequency range and within manufacturer's or system specifications.

Coupling between the transmitter and receiver antennas adversely affects receive system sensitivity. Coupling should be reduced such that a transmitting antenna does not influence a receiving system.

During the design phase of the ship, the impedance measurements as well as the coupling will have been performed on a scale model. The final design and topside antenna layout will have been based on the modelled test results and/or computer predictions. Some differences between the scale model and the final ship installation can be expected. However, the comprehensive modelling will have minimized differences.

The actual measured data obtained after the ship's construction will be used to validate the scale / computer model results.

Limit Specification

Maximum VSWR = 1:3 over the specified frequency range of the antenna.

4.10 Susceptibility to Pulsed Environments (NEMP and LEMP)

A nuclear explosion far above the earth can illuminate a ship with an electromagnetic field up to 50 kV/m during a very short time. This short pulse can disrupt or damage onboard electronic systems.

As it's not possible to perform a real nuclear test, the NEMP test will simulate the electromagnetic impulse around the ship under test. STANAG 4145 [Ref 4] describes in detail the waveform of the test impulse.

While the ship is being illuminated by a reduced NEMP, measurements will be performed in the time domain on signals induced in topside cables and cable penetrations. Induced current measurements or pin voltages on specific system cables from outside to inside indicate specific system NEMP responses. Field strength levels measured inside and outside the platform indicate platform screening/shielding attenuation to transient signals.

Test and response analysis, including Fast Fourier Analysis, can then determine the platform's ability to withstand a 50 kV/m NEMP.

A NEMP Test Plan must be prepared prior to testing, and it shall include details of all the test locations, test equipment, probes etc. It should also clearly define system operating parameters and failure criteria.

It should be noted that:

a. Ships will be tested at levels up to 2500 V/m due to the distance between the EMP transmit antenna and the ship. At 100 metres from the ship, place a vertically polarized antenna so that a homogeneous field will illuminate the entire ship.

b. The results of this low level test can be used for analysis and investigation to determine if the ship can withstand a full threat NEMP.

c. The equipment installed on board must not be disturbed or become defective after the NEMP test.

Lightning Electromagnetic Pulse (LEMP) is the electromagnetic radiation associated with a lightning discharge. The resulting electric and magnetic fields may couple with electrical/electronic systems to produce damaging current and voltage surges (See also AECTP 254 [Ref 5]). Lighting effect are divided in two categories: Direct Strike and Indirect Effects.

A direct strike is a lightning discharge which attaches directly to the materiel (system) considered, causing actual lightning current to flow in parts or the whole of that system.

The Indirect Effect is the effect due to coupling of the lightning's magnetic or electric field. Such effects can arise as a result of either a direct strike or a nearby flash. An example is a transient voltage induced in materiel wiring.

NOTE: This may change in the future with the use of composite materials.

For non-metallic ships installation requirements are applicable to minimise the adverse effect of lightning for example placement of lightning rods.

4.11 Radiation Hazard Survey

Radiation Hazard can be divided into three parts:

a. Hazard to Personnel (HERP): All situations should conform to the limits of STANAG 2345 [Ref 6] or the ICNIRP Guidelines [Ref 7] otherwise the outer deck of the ship must be prohibited for personnel.

b. Hazard to Ordnance (HERO): All weapon systems shall be placed in areas where the electromagnetic environment is within the applicable HERO standard. Meaning that the levels of the standard are not to be exceeded.

c. Hazard to Fuel (HERF): Avoid ignition off fuels by for instants sparks caused by the electromagnetic field of transmissions.

Measurements shall be performed according to recommended measurement procedure described in the applicable exposure standard for example ICNIRP Guidelines for HERP and AECTP 508/3 [Ref 8] for HERO. The measurement results shall be translated into operational legislation and procedures for the ship based on the applicable exposure HERP, HERO, HERF standards.

Ships operating during Naval operations use the procedures described in the ACEP-2 [Ref 9] Radhaz Manual. The aim of this manual is to give information regarding procedures to be taken to avoid the hazards that can arise when Personnel; Munitions and weapon systems embodying electro-explosive devices (EED); Fuels, flammables and Safety critical electronic systems (SCES) are exposed to electromagnetic radiation in radio and radar frequency environments.

4.11.1 HERP

HERP is the abbreviation for Hazards of Electromagnetic Radiation to Personnel. Ships personnel must know where, and under what conditions they can walk/occupy the top decks of the ship during transmissions. They must also know the safe and unsafe parts of the deck and ship. Onboard the ship, all places and locations accessible for personnel must be measured during operation of the different transmitters. To ensure all hot spots and resonances are found, the complete frequency range of the transmitters will be measured. With signs and marks these areas shall be made visible to ships personnel.

At a minimum, measurements should be performed onboard the first ship built in its class (assuming no significant changes in topside/emitter system configuration of the class). Otherwise when additional transmitter equipment is installed a Radiation Hazard Survey is necessary.

4.11.2 HERO

HERO is the abbreviation for Hazards of Electromagnetic Radiation to Ordnance, i.e. the dangers of early ignition of armed weapon systems, munitions or systems containing Electrically Initiated Devices (EID) by the present electromagnetic environment onboard the ship.

The electromagnetic environment at the places of weapon systems must be surveyed. The levels of the HERO standard, for example AECTP 258 Table 258-5 Worst Case Operational EME Field Strength levels [Ref 3] must not be exceeded. Measures like contour blanking for radars can help to achieve to comply with the HERO standard.

Additionally, the transportation and use of munitions by personnel should be done safely taking in to account the HERP standard, without adverse impact to munitions during the RF exposure. In a harbour on the other hand radio or radar transmission are prohibit during the loading or unloading of munitions.

4.11.3 HERF

HERF is the abbreviation for Hazards of Electromagnetic Radiation to Fuel. The dangers of igniting fuels do to the presents of the electromagnetic environment onboard a ship. Dependent of the flashpoint, self ignition temperature, of the fuel or flammable material different procedures should be take into account to avoid causing a hazard during for instance a fuelling operation. In a harbour is advised to prohibit radio or radar transmission during any kind of fuelling operations or similar activity

4.12 Interference Report

At the conclusion of the EMI testing an Interference Report must be prepared. The report should be analytic and sufficiently detailed to permit its use as the basis for decisions concerning corrective action. The report must include all useful information and should include, as a minimum:

a. The name, hull number, location of the ship and the date when each test phase was conducted.

b. A brief description of the test procedures to indicate that the survey was adequate in scope and method. An explanation of any unusual circumstances concerning the test procedures or results.

c. A list of electrical equipment that exceeded the limits of **Figure 506-1**.

d. Results of the visual examination, and whether all deficiencies noted were corrected prior to starting tests.

e. An interference summary sheet, listing all equipment tested and the interference condition of each.

f. Interference details giving an analytic discussion of each case of interference recorded on the interference summary sheet and recommendations to eliminate the interference.

g. Antenna identification giving antenna number, description, location, and terminating equipment.

h. An EMI test and survey certification to certify the EMI status of the ship under test.

4.12.1 Test Data Sheets

As part of the test agenda prepare test data sheets to record each test results. Each of the test monitor personnel assigned to monitor specified equipment should use the test data sheets to record equipment monitored and all incidents of interference. At the conclusion of the tests, use the data sheets to prepare the Interference Summary Sheet and the Interference Details Report.

4.12.2 Interference Summary Sheet

Complete an Interference Summary Sheet to give a composite view of the ship's overall interference condition. Prepare the summary sheet from information recorded on test data sheets; list all electronic equipment tested, and the level of interference relative to each. Enter the severity of interference opposite the equipment causing interference, and under the equipment receiving interference. The level of interference will determine the urgency of the corrective action. Active equipment, such as transmitters, which malfunctioned due to energy received from other transmitting equipment, should also be listed under monitored equipment.

4.12.3 Interference Details Report

Fully discuss the incidents of interference entered on the "Interference Summary Sheet" under a section of the report entitled "Interference Details." Information relative to the following should be given in the discussion of each interference condition:

a. Each interference condition identified by the active equipment row number and the monitored equipment column number.

b. Active and monitored equipment by nomenclature involved in each interference condition.

c. Frequency, frequencies, or frequency range of the interference and whether the level of interference changes with a change in frequency.

d. Operational mode of each equipment, such as amplitude modulation (AM), continuous wave (CW), FSK, and single sideband (SSB) or other (describe), and whether interference varies with a change in operational mode.

e. Characteristics of the interference, such as broadband, narrowband, static discharges, radar PRF, display corruption (e.g. spoking), buzzing, hash, overloading, inter-modulation, or other (describe).

f. Effects of interference that causes complete loss or partial loss of signal information; presents noise on video display; or causes the Voltage Standing Wave Ratio (VSWR) relay to trip.

g. Cause of interference such as coupling between antennas, radar illumination, susceptible cables, arcing in standing rigging, insufficient separation between transmitting and receiving frequencies, or case penetration.

h. Whether monitored equipment are equipped with filters, blankers, or multi-couplers and the operational condition of each.

i. Recommendations to eliminate or reduce interference. Base corrective action on technical considerations, physical constraints, and economical factors. However, avoid recommendations that are technically correct but impractical. Specify location if equipment relocation is recommended.

4.13 Test and Survey Certification

Include an EMI test and survey certification as part of the EMI survey report. Complete the certification form in accordance with country specific guidelines. The supervisor or personnel conducting the survey should sign the survey. Certification provides information concerning the EMI status of each ship or platform tested.

5 DETAILED REQUIREMENTS

A good starting point is to install EMI qualified military equipment onboard the platform. Additionally, equipment should be installed with a system EMC design approach. This includes proper routing and separation of different types of cabling to minimize EMI interactions. In most cases the platform installation will conform to national or program EMC installation rules.

The following design areas should have special attention:

a. Shielded Cables

b. Earthing / Grounding of the Cable Screening / Shields

c. Cable Glands or Stand-Pipe Bonding

d. High Power verses Low Power / Sensitive Cable Separation

5.1 Shielded Cables

Shielded cables or screened cables are used to improve the immunity of the signals in the cables to ambient electromagnetic noise and to reduce the unwanted emissions from the signals carried by a cable. The cable shield most RF bond with the enclosure shield at both ends of each shielded cable, otherwise there are gaps in the overall shielding and the RF emissions and immunity performance will decline. The best connection is one in which the screen is extended up to and makes a solid 360° connection with the ground plane or chassis [Ref 10]. This is best achieved with a hard-wired cable termination using a conductive gland and ferrule which clamps over the cable screen.

Avoid the use of pigtail connections, a length of twisted-braid, foil shield drain wire, other wire or connector pin used to electrically bond a cable shield to an item of equipment. The screening performance of shielded cables is expressed in terms of transfer impedance or shield effectiveness.

The transfer impedance is a measure of the voltage induced per unit length on the inner conductor(s) of the cable by an interfering current injected at the cable outer shield. It can be used to refer to the cable alone, or to the cable/connector assembly. The shield effectiveness is a ratio (in dB) of the voltage or current induced into the centre conductors/s of the cable, generated by an electromagnetic field, with and without the shield in place. With hull penetration points shielded cables should be 360-degree bonded at the point of entry into the hull, superstructure, deck, bulkhead or shielded compartment. During platform cable installation, conduct periodic checks to validate EMC.

5.2 Earthing / Grounding of the Cable Screening / Shields

Cable screening, metallic enclosures and metallic equipment must be effectively grounded. The aim of grounding /earthing is to unite the reference potential on shipboard. The ground or earth at metallic ships is formed by the metallic structure (in contact with the water) itself. For non-metallic ships a metal ground plate mounted on the hull is used as common ground. Grounding /earthing must be applied for two reasons, namely:

a. Personnel Safety (protective ground / protective earth)

b. Electromagnetic Compatibility of systems, to prevent radiation and improve immunity

5.2.1 Personnel Safety

The protective ground (protective earth) is necessary as a protective measure against currents dangerous to the human body. It is an electrical connection preventing exposed metal parts of electrical machines or equipment having a dangerous potential difference with regard to the ship's ground. The conductor electrically connects the conductive parts of the equipment casing with external conductive parts, the main grounding (earthing) terminal, the earth point of power distribution system or the metallic casing of other equipment.

5.2.2 Electromagnetic Compatibility of Systems

For EMC purposes interconnections between metal parts equalize the different potentials. A low impedance at the operating frequency range and disturbing frequencies is required. The frequency range and the physical size of the electrical device determine the achievable equalization of potentials and the effectiveness of the ground. In general all connections should have the following properties:

i Low HF Impedance

ii Smallest possible length (small inductance)

iii Vibration resistance of connectors and conductors

iv Corrosion resistance

v Access for routine inspection

5.3 Cable Glands or Stand Pipe Bonding

Cables, conduit, waveguide and pipes penetrating the hull (or shielded compartments) shall be treated to prevent topside EME energy intrusion (hull penetration EMI) through the skin of the ship into below decks spaces and equipment. Waveguides, pipes, metal tubing, and exhaust stacks routed in topside areas and penetrating a weather deck or bulkhead should be grounded at the penetration point.

To prevent inter-system and below decks coupling of own-ship's EM transmissions the outer perimeter of all cable shields and metallic conduit, waveguide and pipes penetrating the hull (or shielded compartments) shall be bonded to hull ground and provide a 360-degree peripheral bond at the penetration point Cables, cables penetrations, and gland installation are controlled by specific national design requirements. Upon completing installation, conduct measurements to determine if the installation followed EMC guidelines. **Clause 5.3.5** provides a test procedure for testing cable penetrations

5.3.1 Test Cable Penetration

Screened cables are used throughout installations to avoid unwanted currents set up by external electromagnetic fields, to couple unto signal wires inside the cable. The cable screen will then carry these unwanted currents, and it is important that these currents are not carried inside the ship or cabinets/enclosures. To prevent this, the cable screen must be circumferentially galvanically connected to the ship/enclosure boundaries. This can be done in a number of ways by use of multi cable transits, cable glands, casting or similar. These procedures describe how to test this decoupling without having to open up the penetrations for inspections.

5.3.2 Method

A current is injected onto the cable screen on one side of the penetration point with a chosen frequency. The amplitude of this current is measured on both sides of the penetration. The difference of these measurements gives an indication of the decoupling of this cable at the measured frequency.

5.3.3 Performing the Measurement

It is necessary to inject approximately 10 W into the cable screen as indicated on the amplifier output meter. During the measurements the cables must not be moved. The grounding of the cable screen at the cable termination point must also not be altered during the test. **Figure 506-2** shows the test set up. Injection probe and current probe must be isolated from cupper plane.

5.3.4 Choice of Measurement Frequencies

The most important frequencies to be investigated are 2 MHz, 5 MHz and 10 MHz. For critical cables resonance frequencies with respect to cable lengths must also me investigated.

5.3.5 Procedure for Test of Multi Cable Transits

a. Connect the Injection Probe and the measurement probe as close as possible to the Multi Cable Transit to be tested

b. Adjust to wanted frequency on the signal generator. Note the exact frequency in the measurement form (Frequency: … MHz).

c. Adjust the output level of the signal generator to give 10 Watt output from the amplifier as indicated on the amplifier meter. (NB Do Not Overload The Amplifier Input!)

d. Adjust the spectrum analyzer to the same frequency as the signal generator. Make sure the attenuator is in the AUTO mode, and that the input is set for 50 Ohms. Set SPAN as appropriate. Make sure the spectrum analyzer is warmed up and aligned.

e. Note the indicated level of the signal generator in the measurement form (Signal Generator: …. dBm, together with the power of the Amplifier : … Watt).

f. Note the indicated level of the spectrum analyzer in the measurement form (Injected: dBm).

g. Disconnect the current probe and reconnect it on the other side of the enclosure. Make sure it is on the same Cable! (Ref Cable number).

h. Note indicated level of the spectrum analyzer in the measurement form (Measured: dBm).

i. Calculate the attenuation in the spreadsheet

5.4 High Power verses Low Power / Sensitive Cable Separation

To prevent low-frequency crosstalk, RF coupling or ‘unintentional antenna’ behaviour of cables and installations, cable routing should be applied. To reduce emissions and improve immunity of cables route cables along a parallel-earthing conductor which is connected at both sides to the earth of the equipment. On shipboard this can be achieved by installing cables close to the metallic ship structure or on metallic cable trays. Cable trays should form a continuous, well-conducting metallic structure over its full length and must be RF bonded at both ends (and all joints) to provide a close-proximity return path for the cables common-mode emissions. Basically all cables outside the ship's structure should be metal sheathed, metal braided or otherwise adequately screened. Cables must be segregate into ’cable categories’ according to the kinds of signals they carry. Separation and bundling of cables according to ‘cable categories’ is also part of cable routing.

Table 506-4 presents an overview of different types of interconnecting cables with corresponding cable category. Independently of the system they belong to cables the same category may be bundled, with exception of cable category F.

To insure EMC separate single cables or bundled cables of different categories, which run parallel, from each other. **Figure 506-3** presents the separation distances between the cable categories.

Cables for receiving antenna, radar, sonar equipment and echosounders should be double screen cables or coaxial cables inside protective piping. Additionally, check separation distances between high power and sensitive cables and make if needed corrections.

Frequency Range	6dB Resolution Bandwidth (RBW)	Minimum Sweep Time (Seconds)
2MHz – 30MHz	10kHz	150*Span RBW * VBW
30MHz – 1GHz	100kHz	
1GHz – 6GHz	1MHz	

Table 506-1 Measurement Bandwidth Settings

Detected Noise Level (Unintentional Emissions)	Classification	Category
< 10dB	Mild [1]	III
10 – 20 dB	Medium [2]	II
> 20dB	Severe	I

NOTES
[1] Unintentional emissions must not impact more than 10% of channels or frequency range of selected equipment. If it does, it is considered Medium.
[2] Unintentional emissions must not impact more than 50% of channels or frequency range of selected equipment. If it does, it is considered Severe.

Table 506-2 Unintentional Emissions Classifications

Category	Active Element	Monitoring Equipment
1	Electrical equipments which exceeded the allowable limits of Phase 1.	Receivers, VLF through to HF
2	Transmitters, VLF through HF	Receivers, VLF through to HF
3	Transmitters, VHF and above (excluding radar)	Receivers, VHF and above Amplifier announcing systems
4	Radar Transmitters	Receivers, HF and above Amplifier type announcing systems Closed circuit TV
5	Sonar transmitters Degaussing system	Receivers, sonar, LF, underway telephones, fathometers
6	Miscellaneous active equipment not specified above	Receivers, as applicable
7 (Final)	All active equipments utilized in above tests	All monitor equipments utilized in above tests
Note:	LF 30 kHz – 300 kHz MF 300 kHz – 3 MHz HF 3 MHz – 30 MHz	VHF 30 MHz – 300 MHz UHF 300 MHz – 3 GHz SHF 3 GHz – 30 GHz

Table 506-3 Phase 2 Electronic Equipment Test Categories

Emission / Immunity rating	Level		Cable Category	Applicability
	DC and LF	HF and Pulse		
Extremely Sensitive	1 mV ↓	1 µV ↓	A	Radio receiver cables TV receiver cables Sonar and Echosounders hydrophone cables Video signal cables
Sensitive	100 mV ↓	10 µV ↓	B	Voltage, frequency or phase dependent signalling cables Synchro cables (400/1100 Hz) Low level Analogue and digital signal cables
Indifferent	24 V ↓	↓	C	Power supply cables Telephone signal cables Loudspeaker signal cables Control signals cables Alarm signals cables High voltage current (< 300 A) cables
Potentially disturbing	440 V ↓	3 V ↓	D	Switchboard cables “Press to talk” cables Pulsed low-power signal cables Power transport cables for servo’s Driver cables broadband amplifiers High level Digital signal cables
Extremely disturbing	↓	30 V ↓	E	Transmit antenna cables High voltage current (> 300 A) cables Pulsed high-power signal cabels Cables for High powered semiconductor converter Sonar and Echosounder transmit cables
Extremely Sensitive and Extremely disturbing	↓ 1000 V	↓ 1000 V	F	Radio Transceiver cables Transducer cables Echosounder Transceiver cables
Insensitive and not disturbing			Z	Fibre optic connections

Table 506-4 Cable Categories Emission / Immunity Rating

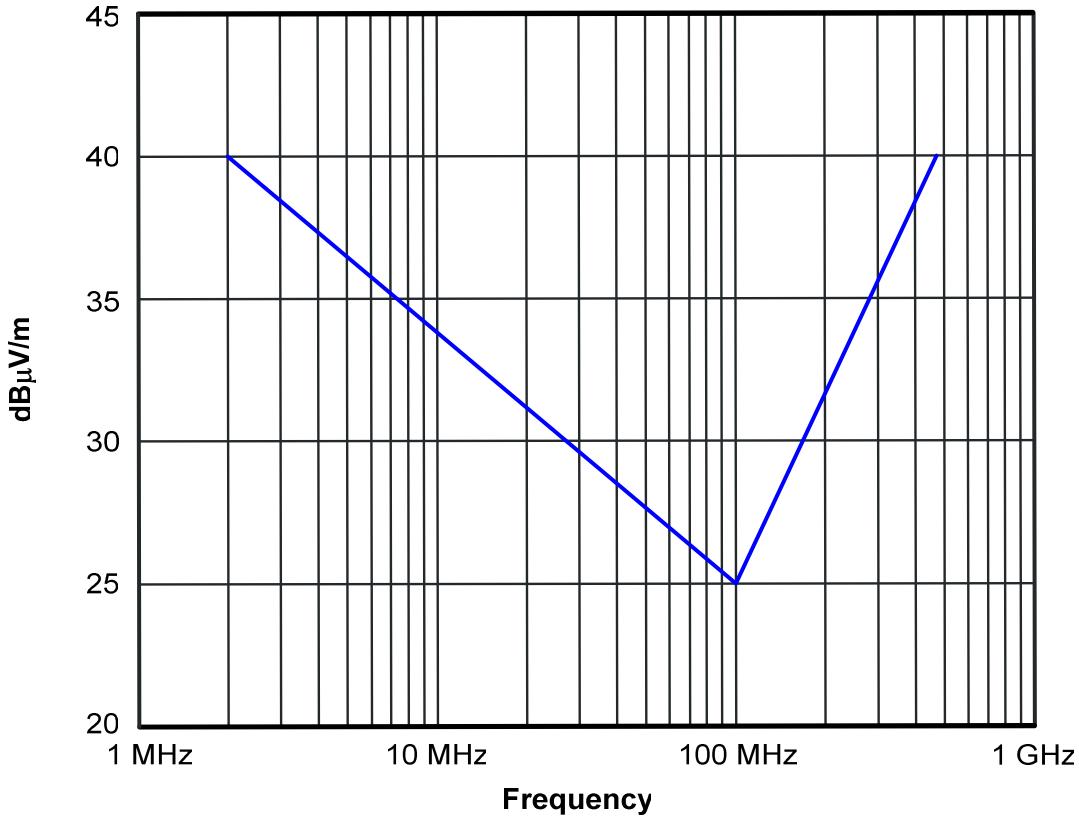

Figure 506-1 Emission Limits for Top Side Ambient RF Environment

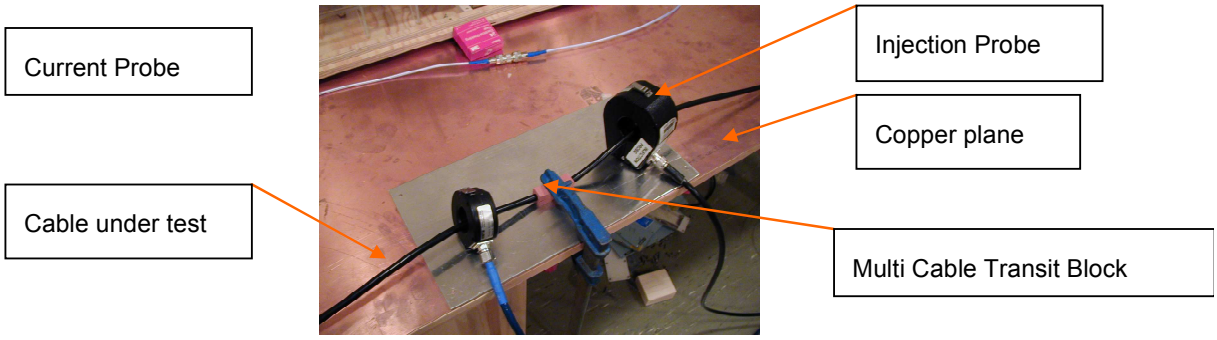

Figure 506-2 Set-Up Testing Cable Penetration

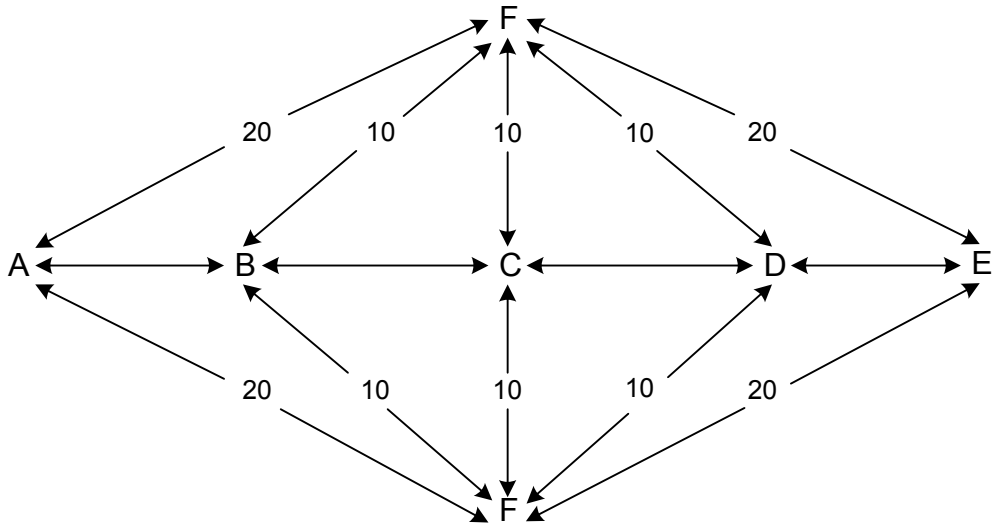

Figure 506-3 Separation Distances between Cable Categories

6 APPLICABLE DOCUMENTS

6.1 References

Ref 1	AECTP 501	AECTP 500 Electromagnetic Environmental Effects Test and Verification. Category 501 Equipment and Sub-System Tests
Ref 2	STANAG 1008	Characteristics of Shipboard Electrical Power Systems in Warships of the North Atlantic Navies
Ref 3	AECTP 258	AECTP 250 Electrical and Electromagnetic Environmental Conditions – Leaflet 258 Radio Frequency Electromagnetic Environments
Ref 4	STANAG 4145	Nuclear Survivability Criteria for Armed Force Material and Installation
Ref 5	AECTP 254	AECTP 250 Electrical and Electromagnetic Environmental Conditions – Leaflet 254 Atmospheric Electricity And Lightning
Ref 6	STANAG 2345	Evaluation and Control of Personnel Exposure to Radio Frequency Fields 3 kHz to 300 GHz
Ref 7	ICNIRP Guidelines	International Commission on Non Ionising Radiation Protection (ICNIRP) Guidelines for limiting Exposure to time varying Electric, Magnetic and Electromagnetic Fields up to 300 GHz
Ref 8	AECTP 508/3	AECTP 500 Electromagnetic Environmental Effects Test and Verification. 508 Category Leaflet 3 Hazards of Electromagnetic Radiation to Ordnance (HERO) Test Procedure
Ref 9	AECP-2 (C)	NATO Naval Radio and Radar Radiation Hazards
Ref 10	MIL-STD 464	Electromagnetic Environmental Effects Requirements For Systems
Ref 11	MIL-STD-1310G	Standard Practice for Shipboard Bonding, Grounding and Other Techniques for Electromagnetic Compatibility and Safety

7 ACRONYMS

The following acronyms used in this Category are:

AM	Amplitude Modulation
CW	Continuous Wave
ECM	Electronic Counter Measures
EID	Electrically Initiated Device
EM	Electromagnetic
EMC	Electromagnetic Compatibility
EMCON	Emission Control
EME	Electromagnetic Environment
EMI	Electromagnetic Interference
EMP	Electromagnetic Pulse
EUT	Equipment Under Test
FCC	Federal Communication Commission
FSK	Frequency Shift Keying
HERF	Hazards of Electromagnetic Radiation to Fuels
HERO	Hazards of Electromagnetic Radiation to Ordnance
HERP	Hazards of Electromagnetic Radiation to Personnel
HF	High Frequency
HK	Hard Kill
IF	Intermediate Frequency
ITU	International Telecommunication Union
LEMP	Lightning Electromagnetic Pulse
LF	Low Frequency
LNA	Low Noise Amplifier
MF	Medium Frequency
NEMP	Nuclear Electromagnetic Pulse
NTIA	National Telecommunications and Information Administration
PRF	Pulse Repetition Frequency
RADHAZ	Radiation Hazard
RF	Radio Frequency
RFID	Radio Frequency Identification Devices
SCES	Safety Critical Electronic Systems
SHF	Super High Frequency
SK	Soft Kill
SSB	Single Sideband
UHF	Ultra High Frequency
VHF	Very High Frequency
VSWR	Voltage Standing Wave Ratio

8 DEFINITIONS

The following definitions are applicable to this category:

Bond

A term applied to metal parts that are adequately connected together to ensure an electrical low impedance path.

Broadband EMI

Broadband Interference is interference that has a broad spectral energy distribution. This type of interference usually exhibits energy over a wide frequency range and is generally a result of sudden changes in voltage or current.

Earthing

The process of ensuring a satisfactory electrical connection between the structure including the metal skin of an object or vehicle and the surface of the earth.

Electromagnetic Compatibility (EMC)

The ability of electronic/electrical equipment, subsystem and systems to operate in their intended operational environments without suffering or causing unacceptable degradation due to electromagnetic radiation or response.

Electromagnetic Interference (EMI)

Electromagnetic energy which interferes with detection and analysis of a desired signal or which causes an equipment malfunction.

Electromagnetic Environment (EME)

The resulting product of the power and time distribution, in various frequency ranges, of radiated or conducted EM emission levels that may be encountered by a military force, system, or platform when performing its assigned mission in its intended operational environment.

EM Survey

An EM Survey is a generic term describing any type of EMI, HERF, HERO, HERP (non-ionizing RADHAZ), bonding and grounding, shielding effectiveness (SE), etc. tests, or inspections conducted for the purpose of locating and investigating EM-related problems or verifying the status of EM-related control or corrective action measures. EMI and RADHAZ surveys are subsets of the term EM survey. Those terms can be further broken down to describe the specific items (e.g.; bond straps, antennas, etc.) being inspected or tested.

Equipment electrical

A general term describing a machine powered by electricity and usually consists of an enclosure, a variety of electrical components and often a power switch.

Electromagnetic Environmental Effects (E3)

The impact of the electromagnetic environment upon the operational capability of military forces, equipment, systems, and platforms. It encompasses all electromagnetic disciplines, including electromagnetic compatibility; electromagnetic interference; electromagnetic vulnerability; electromagnetic pulse; hazards of electromagnetic radiation to personnel, ordnance, and fuels (volatile materials); and natural phenomena effects of lightning and precipitation static (p-static).

Equipment Under Test (EUT)

The device, equipment, subsystem, or system (ship), to be tested or that is under test, the extent of equipment to be assessed will be detailed in the test plan.

Grounding

The bonding of an equipment case or framework to an object or vessel structure to ensure a common potential.

Hard Kill (HK)

Hard Kill weapons like missiles and guns are designed to destroy.

Intermodulation

Intermodulation products (sometimes termed passive intermodulation) are caused by mixing of two signals in a non-linear junction (such as a corroded bond) and occur at predictable frequencies; intermodulation frequency = $mf_1 \pm nf_2$ where m and n are integers and f_1 and f_2 are two signal frequencies.

Lightning Electromagnetic Pulse (LEMP)

The electromagnetic radiation associated with a lightning discharge. The resulting electric and magnetic fields may couple with electrical/electronic systems to produce damaging current and voltage surges.

Narrowband EMI

Narrowband Interference is interference that has its principal spectral energy confined to a specific frequency or frequencies. This type of interference is usually produced by an oscillator circuit that contains energy only at the frequency of oscillation and harmonics of that frequency.

Nuclear Electromagnetic Pulse (NEMP)

The electromagnetic radiation from a nuclear explosion caused by Compton-recoil electrons and photoelectrons from photons scattered in the materials of the nuclear device or in a surrounding medium. The resulting electric and magnetic fields may couple with electrical/electronic systems to produce damaging current and voltage surges. An Electromagnetic Pulse may also be caused by non-nuclear means.

Radiation Hazards (RADHAZ)

RADHAZ is a generic term that refers to Hazards of Electromagnetic Radiation to Personnel (HERP), Hazards of Electromagnetic Radiation to Fuels (HERF), and Hazards of Electromagnetic Radiation to Ordnance (HERO).

Soft Kill (SK)

Soft Kill weapons like chaffs, decoys, and Electronic Counter Measures (ECMs) are designed to elude, confuse and make incoming threats ineffective.

Small Craft

A small craft is a vessel less than 20 metres in length.

Topside Areas

All shipboard areas continuously exposed to the weather, such as the main deck and above, catwalks, well decks, and those exposed portions of gallery deck.

Visual inspection

A visual inspection is used to verify installation of EMI fixes for known EMI problems, and proper installation and maintenance of topside EM control and RADHAZ avoidance measures.

CATEGORY 507

LAND PLATFORMS AND SYSTEMS ELECTRICAL/ELECTROMAGNETIC ENVIRONMENTAL EFFECTS TEST AND VERIFICATION

1 INTRODUCTION 507-2

2 SCOPE 507-2

3 GENERAL REQUIREMENTS 507-3

4 VERIFICATION REQUIREMENTS 507-3

4.1 General 507-3
4.2 Test Sites 507-3

5 DETAILED REQUIREMENTS 507-7

5.1 General 507-7
5.2 Specific E3 Test and Verification Requirements 507-7

6 APPLICABLE DOCUMENTS 507-21

6.1 Referenced 507-21
6.2 Information Only 507-22

7 ACRONYMS 507-23

8 DEFINITIONS 507-24

FIGURES

Figure 507-1 Example for Power Input Cable Layout with LISN 507-5

Figure 507-2 Example for I/O External Cable Layout with CDN 507-5

Figure 507-3 Test Set-up for VHF Antennas 507-18

TABLES

Table 507-1 Components of E3 Program Applicable to Land Platforms and Systems 507-7

Table 507-2 EMCON Bandwidths 507-18

CATEGORY 507

Land Platforms and Systems Electrical/Electromagnetic Environmental Effects Test and Verification

1 INTRODUCTION

The objective of this Category is to ensure that the design and engineering of Tactical Land Platforms and Systems can meet and demonstrate operational performance and survivability (when applicable) through an Electrical/Electromagnetic Environmental Effects (E3) Test and Verification Program. This involves evaluation of vehicle electrical systems and accessories, on-platform ordnance systems and installed radio communication systems.

It itemizes E3 requirements for the Procurement and Design Authority to consider when developing an E3 Test and Verification Program and offers test guidance on each. Step-by-step E3 test procedures are not provided. Instead, reference is made to national or international test standards that offer more detailed guidance. DEF STAN 59-411 Part 4 [Ref 1], VG 95370 [Ref 2] and European Commission Directive 2004/104/EC [Ref 3] are most useful and should be consulted. [Ref 3] calls up other test methods and standards, but does not recommend specific test limits for military platforms with radio communication subsystems.

The requirements here-in are not intended to serve as a stand-alone set of E3 Test and Verification Requirements to be specified by contract. It is first necessary for the Procurement and Design Authority to agree:

a. Those Requirements applicable to the platform under test.

b. The favoured test methodology among the several identified here-in.

c. The corresponding compliance levels and limits.

d. The applicable Modes of Operation that compliance is to be tested against or demonstrated.

Particular attention is needed when comparing the differing test methodologies of the various national and international documents referenced here-in as there are large variations in test objectives, procedures and applied frequency ranges. Also, not all nations will have access to the specialized test facilities, test ranges or test road tracks necessary to perform selected test requirements. Once the above issues have been decided upon or resolved it is then necessary to develop both an E3 Land Platform Test Plan and E3 Land Platform Test Procedure document. Approval of the test documentation by the Procurement Authority is necessary before the E3 Verification Test Program can proceed.

Electromagnetic Interference (EMI) requirements of Line Replacement Units and sub-system equipments used within platform or system installations are defined in AECTP Category 501 [Ref 4].

NOTE: This document should be read in conjunction with AECTP 504 'Introduction to Platform and System Verification and Test'.

2 SCOPE

This category details the E3 Requirements applicable to Land Platforms and Systems and offers guidelines on the development of an E3 Test and Verification Program.

The terms platform and vehicle here-in may comprise military vehicles, transportable containerised facilities or transportable installations. With respect to communication subsystems, this category is applicable to fixed, transportable and mobile installations and communication systems operating in frequency bands up to 400 MHz for co-located transmitters and receivers using omni-directional antennas.

The scope of this category is Electromagnetic Compatibility (EMC). The Procurement Authority should decide whether additional requirements are applicable, or need to be expanded upon, to render a complete validation of platform performance. Areas requiring additional focus may include Electrostatic Discharge (ESD), lightning, armaments including Hazards of Electromagnetic Radiation to Ordnance (HERO), Hazards of Electromagnetic Radiation to Fuel (HERF), Electrically Initiated Devices (EID), Radar Cross Section (RCS), High Power Microwave—Narrowband, High Power Microwave-Wide/Ultra-Wideband, COMSEC/ TEMPEST Test Programs and Electronic Warfare (EW) Verification Test Programs.

3 GENERAL REQUIREMENTS

The platform shall be electromagnetically compatible among all subsystems and equipment within the platform and with environments caused by electromagnetic effects external to the platform. Safety critical and mission critical system functions shall have a margin of at least 6 dB; and electrically initiated devices shall have a margin of at least 16.5 dB of maximum no-fire stimulus (MNFS) for safety assurances and 6 dB of MNFS for other applications. (Refer to AECTP Category 508 [Ref 5] for guidance on safety margins applicable to ordnance). Verification should be accomplished on production representative platforms. Safety critical and mission critical functions shall be verified to be electromagnetically compatible within the platform and with external environments prior to use in those environments. Verification shall address all life cycle aspects of the platform, including (as applicable) production, normal in-service operation, checkout, upgrades/modernization, maintenance and repairs, obsolescence and technology insertions, storage, transportation, handling, packaging, loading, unloading, launch, and the normal operating procedures associated with each aspect.

4 VERIFICATION REQUIREMENTS

4.1 General

The following general requirements apply to EMI emission and susceptibility testing.

4.2 Test Sites

4.2.1 Anechoic or Semi-Anechoic Screened Room

Anechoic or semi-anechoic screened room based testing is the preferred site for EMI emission testing of Land platforms. There are practical limitations on the size of platform that can be accommodated dependent on the facility used. Hence an Open Air Test Site may be favoured to overcome size and space limitations experienced while testing to external RF Electromagnetic (EM) environments. Difficulties can arise with the performance of platform operations over durations lasting tens of seconds to 180 seconds while high levels of external RF Electromagnetic Environments (EMEs) illuminate the platform. Difficulties can also arise with the performance of both digital and voice radio communications with other systems while under EM illumination. There are doubts regarding the accuracy of radiated and emissions testing in screened rooms below about 30 MHz where the Radio Frequency Absorbent Material (RAM) performance is inadequate to simulate free field test conditions. As a result, realistic coupling may not occur when testing large platforms with large conductive surfaces or long cables. Refer to [Ref 3] or [Ref 4] for guidance on test methods applicable to Radiated Emission, Radiated Susceptibility, Conducted Emission or Conducted Susceptibility testing of a platform inside an anechoic chamber.

4.2.2 Unlined Screened Room

An unlined screened room does not have anechoic material installed. The use of an unlined screened room for EMI testing using the methods of [Ref 4] can result in cavity resonances and wall reflections that contribute to increased measurement uncertainty, and poor test repeatability between facilities. As with the case of anechoic chambers, realistic operation of the platform while being illuminated for tens of seconds is difficult to achieve. However, for Land platforms the use of an unlined room should only be considered when open sites are not available and where no suitable anechoic or semi-anechoic

facility is available. In the event of a marginal radiated emission or susceptibility result within an unlined screened room, best practise would include retest at an Open Area Test Site (OATS) at those frequencies at which marginal results occurred. This is to ensure that the marginal result (either a pass or a fail) was not due to cavity resonances or wall reflections. Pass/Fail criteria should be defined within the test plan together their criticality and equipment Modes of Operation.

4.2.3 Open Area Test Sites

OATS are the preferred method for system-level testing of tracked and wheeled based platforms and systems to defined external RF EM environments. (Radiated susceptibility applies to equipments and subsystem level testing and should be performed in anechoic or semi-anechoic chambers). OATS is a flat area, free from overhead wires and nearby reflecting structures and sufficiently large to permit antenna placing at the specified distances and provide adequate separation between antenna, platform and reflecting structures. OATS require ambient electromagnetic noise levels to be measured and to be sufficiently low to allow EMI emission testing or radio trials to be undertaken against the required limits. For external RF EME testing using OATS appropriate transmitting licences must be obtained, RF safety (RADHAZ) procedures implemented and test instrumentation hardened against the RF fields generated.

All metal work and cabling not associated with the platform should be removed to a distance of at least 10 m from the boundaries of the platform.

4.2.4 Reverberation Chamber

An alternative facility for radiated susceptibility tests (against Ref 4, NRS02, or similar requirements) is a reverberation chamber as defined in NRS02 Alternative Method. NRS02 provides additional guidance on the use of reverberation chambers. It should be noted that reverberation chambers do not provide the low frequency stimulation (typically below 80 MHz) where many of the effects due to cable coupling are seen.

4.2.5 In-Situ Test Site

An in-situ test site is the actual installed environment specifically intended for the Land platform or system(s) under test. In this situation there is little control over the configuration; therefore testing will deviate from the standard screened room test conditions and this should be recorded. An in-situ test site is therefore not suitable for formal compliance testing but may be used for trials data gathering or temporary equipment fits. It is possible to perform emission testing and low level conducted susceptibility testing, but swept radiated susceptibility testing is not usually possible or is only permitted at licensed frequencies (as advised by the National Authorities). Radiated susceptibility testing may use co-located transmitters or mobile radios as the source of the radiated field expected in the environment.

Any unnecessary metal objects and loose cables not part of the installation should be removed from the area.

For radiated emission testing the test antenna should be mounted at the correct test distance from the platform and as far away from surrounding metal surfaces as possible. A minimum 1m separation from surrounding surfaces should be the objective. If it is not possible to achieve the correct test distance, a test at a closer distance may be used and the results applied to the standard limit (as an over test). Adjustment of any specified limits is not recommended due to the uncertainties of near field gradients.

4.2.6 Ground Plane

A Land platform that is to be integrated with other systems should be installed atop a ground plane that extends 1.5m (minimum) beyond the boundaries of the platform. This ground plane should have a safety earth connection when the platform derives electrical power from the power mains or is generating electrical power. (The ground plane can be constructed of aluminium, as the use of the ground plane is only temporary. However the nation's National Electrical Code should be consulted to verify if this is the case). If it is not practicable to mount the platform upon a ground plane, then a ground plane must be constructed and placed immediately adjacent to the boundaries of the platform

and bonded to it at frequent intervals. (I.e. Less than 1m apart). Include details of ground plane construction and installation in the test report.

For platforms that operate in isolation with the exception of cable and/or radio links, the ground plane should be replaced by the normal earthing arrangements.

4.2.7 Length and Arrangement of Connecting Leads to a Platform

The requirements stated in Ref 5 should be met for screened room testing. For OATS, the power leads should be 5m in length. There may be a need to appropriately terminate power cables through the use of either a Line Impedance Stabilization Network (LISN) see **Figure 507-1** or a Coupling and Decoupling Network (CDN) see **Figure 507-2**, (the details of which are described in IEC 61000-4-6 [Ref 6]). The requirements for signal and control leads are also changed for OATS. The interconnecting cable form between separate units of the platform should be as short as practical and the input and output cable forms should be similarly short. The exact cable layout should be recorded and displayed in the test report.

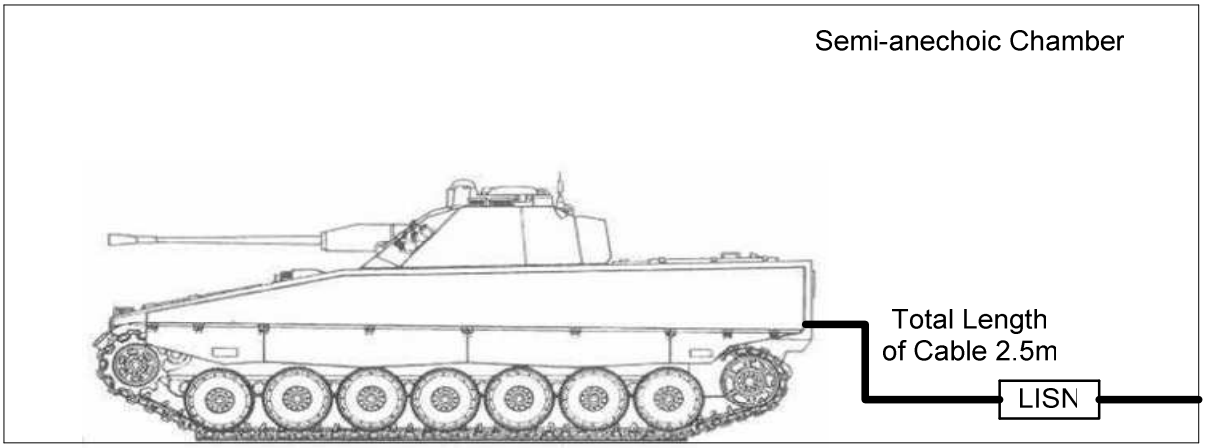

Figure 507-1 Example for Power Input Cable Layout with LISN

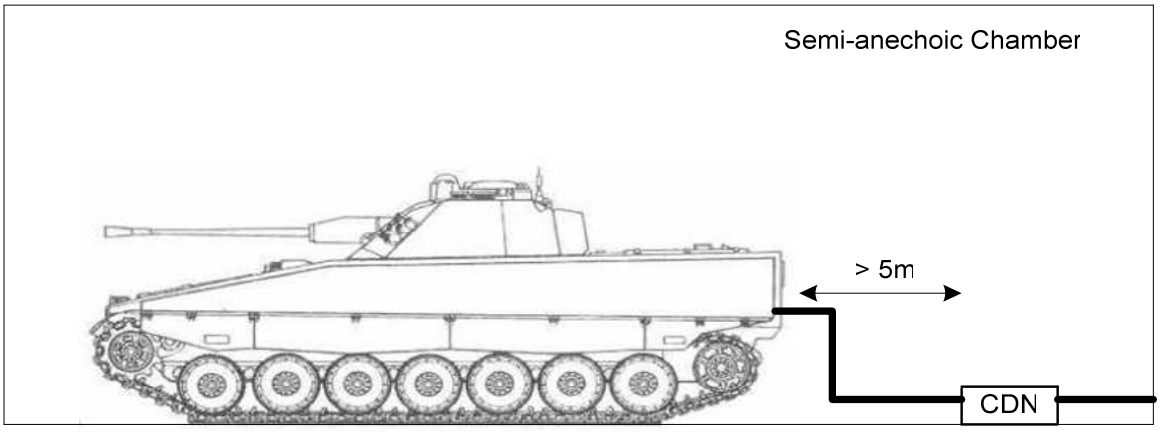

Figure 507-2 Example for I/O External Cable Layout with CDN

4.2.8 Ambient Electromagnetic Noise Levels

For operational testing in an OATS, the test system is powered as normal. If auxiliary equipment are necessary to run the platform and likely to produce electromagnetic noise, they should be screened

and the input and output connections filtered to such a degree that the noise levels produced in the test circuit are at least 6 dB below the test limit.

Broadcast radio frequency signals (e.g. radio and television transmissions), cannot be reduced without a screened room and will be present during emission testing. These signals should be recorded and those whose amplitude exceeds a value 6 dB below the specified limit for the test concerned should be included in the test report so that areas where compliance with the limit cannot be demonstrated can be identified. Broadcast transmissions are not always continuous and overseas transmissions vary in amplitude considerably with the time of day; so by choosing the time for test carefully, minimal disturbance can be achieved.

Many automatic-receivers, controllers and x-y plotters emit radio frequency noise and where tests are made in a screened room with the recording equipment outside, the emitted noise can be eliminated from the test circuit. No such protection exists when testing on-site. Therefore when checking the ambient noise levels, the recording equipment must be operated in the same mode as that intended for the recording of the platform characteristics.

4.2.9 Measurement Conditions

The following conditions should be observed:

a. Ensure the proper functioning of all vehicular functions and all installed equipment and subsystems for all foreseen Modes of Operation and Test Conditions;

b. All test instrumentation are properly calibrated with calibrated parameters traceable to national standards;

c. Test instrumentation should be selected such that the required measurement parameter sensitivity is sufficient to verify required limits or specifications;

d. If the platform under test is equipped with transmit antennas, the radiation pattern of which can be changed either mechanically or electrically, then the electrical bore sights to be applied should be specified by the Design Authority. Ensure that tuning and matching of antennas correspond to anticipated operational characteristics;

e. All test configurations should be recorded and photographed (if permitted).

The following conditions should be ensured during platform tests to an external RF EME:

f. The entire platform should be illuminated uniformly at full threat for the most credible demonstration of hardness;

g. The platform should be powered and realistically operated by test crewmembers during each illumination;

h. To allow for realistic platform operations during illuminations, including communications with a base station or a second set of communication equipments, the typical dwell time should range from several seconds to 100 seconds per test frequency illumination;

i. Multiple platform orientations per test illumination are recommended;

j. A minimum of 350 discrete test frequencies between 10 kHz and 45 GHz is recommended per test orientation. This should include a mix of average power (275 illuminations) and peak power (75 illuminations), the exact mixture of which is platform dependent;

k. Various combinations of modulations (primarily AM, but some FM and PM based upon pre-test analysis) should be considered to properly stimulate the platform;

l. Vertically polarized illuminations are required below 30 MHz, and both horizontal and vertical polarizations are required above 30 MHz.

5 DETAILED REQUIREMENTS

5.1 General

The components of an E3 Test and Verification Program applicable to Land Platforms and Systems are listed in **Table 507-1**.

No Test Applicability Matrix is provided. The final selection of tests and verifications should be related to the role of the specific platform under test as opposed to the platform Type, Class or Family. For example, an Armoured Personnel Carrier (APC) may be configured to serve one of several different operational roles. Not all APC vehicle variants will have radio communication subsystems, ordnance or COMSEC requirements.

Requirement	Item
1	Configuration Check
2	Functional Performance Baseline
3	COMSEC/TEMPEST Installation Inspection
4	Grounding/Bonding
5	RADHAZ Survey
6	Electrical Safety
7	AC/DC Power Quality
8	Electromagnetic Interference Tests
9	Electromagnetic Compatibility, Intra-System
10	Antenna Radiation Pattern
11	Spurious and Harmonic Emissions From Antenna Terminals
12	Degradation of Communications While Stationary or on the Move
13	Emission Control, (EMCON)
14	Hazards of Electromagnetic Radiation to Ordnance (HERO)
15	Electromagnetic Pulse
16	Shielded Effectiveness

Table 507-1 Components of E3 Program Applicable to Land Platforms and Systems

5.2 Specific E3 Test and Verification Requirements

5.2.1 Requirement #1 – Configuration Check

a. General: - This Requirement ensures the platform is constructed and configured in a manner that is representative of the final production level deliverable.

b. Requirements: - As-built checklists and as-built drawings supplied from the Design Authority.

c. Guidance: - This Requirement is applicable for all platforms regardless of role or class.

Ensure the configuration and deviations of the as-build drawings and checklists are clearly defined.

1. Inspect the platform configuration against an as-built checklist that detail the most recent version of equipment configuration and the most recent hardware and software installation including printed circuit boards.
2. Inspect the platform configuration against as-built drawings that detail all equipment locations; all wire and cable types, sizes and lengths; details of the routing of interfaces including wires, cables, connectors, terminations. Ensure all wires, cables, connectors and terminations are of the correct type.
3. Visually inspect for workmanship, adequate separation between equipment, wires and cables necessary for the control of EMI and achievement of EMC.
4. Assess the general condition of the equipment and cables, (doors, panels, fixings in place, connectors tight, cable damage etc.). Where the equipment or installation is deficient, record and (if permitted) photograph the deficiencies.
5. If the Configuration Check fails to meet requirements, then re-schedule the E3 Test and Verification Program to allow for re-design and re-installation of the installed equipment deliverable.

5.2.2 Requirement # 2 – Functional Performance Baseline

a. General - This Requirement verifies all vehicle functions and all installed subsystems and equipment meet stated operational performance requirements.

b. Requirements - Specifications and tolerances of all installed equipment and subsystems supplied from the Design Authority.

c. Guidance - This Requirement is applicable for all platforms regardless of role or Class. Prior to the start of the E3 Test and Verification Program, the Design Authority should specify the:

   1. Modes of Operation for each vehicular function and installed equipment to be verified;
   2. Performance conditions, levels, tolerances and equipment criticality;
   3. Functional Performance Baseline to be repeated at the start or end of each test day, or start of each E3 Requirement.

Perform checks and tests to ensure all equipment and ancillaries' power ON and operate to required performance levels over all Modes of Operation.

Use the above power ON checks as a basis for a Functional Performance Baseline to be repeated at the start or end of each test day; at the start or end of tests for each E3 Requirement of the E3 Test and Verification Program; or as baseline reference to be used over the entire life cycle of the Land platform. A subset of the Functional Performance Test can be used to develop shorter Pre and Post Functional Tests to be repeated throughout the E3 Test and Verification Program.

If the Functional Performance fails to meet the stated Baseline, then re-schedule the E3 Test and Verification Program to allow for re-design and re-installation of the installed equipment deliverable.

5.2.3 Requirement # 3 – COMSEC/TEMPEST Installation Inspection

a. General - This Requirement ensures that the installation of COMSEC/TEMPEST related equipment affords the EMI/EMC installation conditions necessary for the E3 Test and Verification Program to continue.

b. Requirements

   1. SDIP-29 NATO TEMPEST Requirements And Evaluations Procedures [Ref 7].
   2. NACSEM 5112 [Ref 8] NONSTOP Evaluation Techniques.

c. Guidance - This requirement is only applicable to platforms serving a COMSEC role.

1 A visual inspection of the COMSEC/TEMPEST installation should only be performed by certified COMSEC/TEMPEST personnel to assess the adequacy of grounding practices, wire/cable routing and wire/cable separation practices.

2. If the level of workmanship proves unsatisfactory at this early step, experience has shown that the platform under test will require re-installation and/or re-wiring thereby invalidating all further E3 test and verification results. If the COMSEC/TEMPEST Installation Inspection fails to meet requirements, then re-schedule the E3 Test and Verification Program to allow for re-design and re-installation of the COMSEC/TEMPEST equipment deliverable.

3. If the COMSEC/TEMPEST Installation Inspection proves satisfactory, then a detailed set of COMSEC tests can be performed to ensure proper classification and separation of RED/BLACK signals to required levels. A COMSEC/TEMPEST Test Program is outside the scope of this category.

5.2.4 Requirement # 4 – Grounding and Bonding Measurements

a. General - This Requirement describes Grounding and Bonding (G/B) measurements to be taken of the equipment installation, with measurements referenced to the Land platform's primary ground reference point. Experience has shown that successful completion of Requirements 1 though 4 will greatly reduce the EMC risk to the remaining elements of the E3 Test and Verification Program.

b. Requirements - Unless otherwise specified, minimal acceptable levels of G/B requirements are as follows:

1. An end-to-end G/B requirement refers to the maximum resistance between any individual ground point and the final vehicle grounding point typically within the vehicle's engine compartment. I.e. At the negative battery terminal's ground termination. The total end-to-end G/B requirement should be no more than 25 milli-ohms, although 2.5 milli-ohms should in fact be achievable;

2. The end-to end G/B requirement for Personnel Safety Grounds should be no more than 100 milli-ohms;

3. The G/B requirement for each individual ground termination should be no more than 2.5 milli-ohms.

c. Guidance - The following guidance is offered in the performance of G/B measurements:

1. First perform a visual inspection of each G/B location. Examine for missing grounds and bonds, unnecessary multiple terminations, quality of workmanship, painted surfaces, untreated surfaces, mechanical movement of the G/B hardware, use of inappropriate G/B hardware, whether ground straps are sheathed or unsheathed, inappropriately sized ground straps, etc. Document all findings supported by photographs as necessary.

2. Disconnect the negative terminal from the vehicle battery;

3. Perform a ground measurement from the disconnected end of the battery ground cable/lead to the engine compartment ground point/stud;

4. Perform all remaining G/B measurements from the ground stud of the equipment under test, or equipment rack, to the open end of the disconnected battery cable/lead (still attached to the engine ground point/stud within the vehicle's engine compartment). Use of a Four Terminal Ohmmeter or 1kHz Field Meter with test leads a minimum of 4m in length is recommended to ensure accurate measurements.

NOTES:

1. Ref 1 discusses G/B requirements and limits to apply in greater detail.
2. MIL-HDBK-1857 [Ref 9] discusses G/B design and installation.
3. Additional guidance can be found within VG 95375 [Ref 10] and VG 95376 [Ref 11].

5.2.5 Requirement # 5 – RADHAZ Survey

a. General - This Requirement describes the performance of a RADHAZ Survey to identify Hazards of Electromagnetic Radiation to Personnel, or HERP, and to ensure compliance with personnel exposure requirements.

b. Requirements - STANAG 2345 [Ref 12], applicable national standard, or [Ref 3].

c. Guidance - Operate equipment at a representative sample of transmitter frequencies.

   1. This may include the frequency, or frequencies, at which the equipment was designed to operate; or frequencies as detailed by the equipment's Frequency List generated by the national spectrum manager. For multi-channel or multi-band transmitters, examine a minimum of six transmit frequencies equally spaced over the entire transmitter's band of operation or the band of operation permitted by the Frequency Spectrum Manager authority.
   2. Measure and assess the RF hazard to personnel for radiated electric fields, radiated magnetic fields, Contact Currents; and where applicable, Induced Currents; and peak and average field strength levels from pulsed or radar systems.
   3. It may be necessary to survey all possible transmit wave shapes.
   4. For surveys about radio communication systems, performing the survey at a steady-state CW operating mode should suffice as the worst-case exposure scenario.
   5. For surveys about pulsed or radar systems, perform the survey at an operating mode capable of producing the highest duty cycle, and with transmit antenna stationary and rotating if possible.
   6. Where possible, record the FORWARD and REFLECTED power levels at the output terminals of all RF transmitters and the VSWR at the transmit antenna terminals.
   7. The survey report should clearly indicate the separation distance required by personnel about a non-compliant area to achieve compliance to required Personnel Exposure Levels.

Note: Generic survey procedures can be found in:

1. European Commission ECC/REC/(02)04 [Ref 13]
2. ANSI/IEEE C95.3 [Ref 14]

5.2.6 Requirement # 6 – Electrical Safety Tests

a. General - This Requirement verifies that electrical power faults (open/short circuits) do not present safety hazards to personnel, or damage the electronic suite.

b. Requirements – EU Directive 2006/95/EC (Low Voltage Directive) [Ref 15] Unless otherwise specified, minimal acceptable requirements are as follows:

   1. Equipment should be configured so that personnel will not be exposed to voltages in excess of 30V RMS or 60VDC;
   2. High voltage circuits and devices should discharge to ≤ 30V within two seconds of power removal.

c. Guidance - NIL.

5.2.7 Requirement # 7 – AC/DC Power Quality

a. General - This Requirement ensures the Land platform will provide an acceptable level or standard of AC and/or DC electrical power to service installed equipment and subsystems, and ensure that installed equipment and subsystems will not degrade the characteristics of the Land platform's electrical power bus.

b. Requirements – AECP 250 – Leaflet 259 [Ref 16]. This Leaflet lists national power quality standards applicable to Land Platforms and Systems. Also available for reference are:

   1. STANAG 4134 [Ref 17]

   2. STANAG 4135 [Ref 18]

c. Guidance - Particular attention should be made in the assessment of EMI impacts due to installed high current sources on radio communication performance. Typical high current sources include the horn, compartment heaters, windshield defrosters, air conditioner, turn signals, headlights and high beams and on-platform cranes and winches.

5.2.8 Requirement # 8 – Electromagnetic Interference Tests

a. General - This Requirement ensures the electromagnetic interference environment generated by the Land platform with all electrical and electronic equipment operational is controlled and ensures a good basis for the achievement of EMC.

b. Individual subsystems and equipment shall meet interference control requirements (such as the conducted emissions, radiated emissions, conducted susceptibility, and radiated susceptibility requirements of Ref 4) so that the overall system complies with all applicable requirements of this standard. Platform compliance shall be verified by tests that are consistent with the equipment level requirements (such as testing in accordance with Ref 4). The limits and test methods of [Ref 4] are the default levels for the system. The limits may be tailored according to the operational use of the system in relation to external (military) transmitters and receivers.

c. Additional requirements / test methods for land systems can be found in [Ref 1] and [Ref 2].

   It is not recommended to utilize the compliance levels or limits specified by Ref [3] in order to demonstrate compliance with the requirements of this category since they do not make any allowance for military communications systems

d. Guidance on Conducted Emissions Measurements

   Conducted emission measurements are not normally necessary on Land Platforms or self-sufficient army equipment, but may be applicable to mobile/transportable C^3I facilities and fixed facilities. Mutual compatibility of interconnected subsystems is usually adequately demonstrated during the performance of an E3 Test and Verification Program, provided it was developed to cover all possible operating conditions. If however a platform under test supplies power to external systems, then conducted emission measurements that follow Ref 4 Test Method NCE02 should be conducted on these lines.

e. Guidance on Radiated Emission Measurements

   Radiated emission measurements are essential on communication installations and any platform that needs to operate in their vicinity in order to demonstrate that the external RF environment is not being degraded. Measurements should be made on all four sides of a vehicle platform at a minimum of one position at each side, in the region of potentially maximum emissions.

   If a vehicle platform is physically separated from other systems by more than 1m, then the magnetic field emissions (due to 50/60Hz power lines for example) do not need to be controlled or measured unless magnetically sensitive co-located equipment are present, e.g. CRT displays. Ref 4 Test Method NRE02 offers guidance.

f. Guidance on Conducted Susceptibility Measurements

If the vehicle platform does not supply external signal or power cable connections to other systems, then conducted susceptibility tests are not applicable.

However there may be situations in which a vehicle may require the use of external cabling such as Vehicle Interface Panel (VIP) Cabling to and from a vehicle bulkhead panel, cabling to a remote AC/DC power generator, cabling to exterior tripod mounted equipment, etc. Such cabling may be subject to conducted susceptibility test requirements.

In general, equipment on the battlefield is unlikely to experience significant externally generated fields at frequencies below 500 kHz. Therefore RF conducted susceptibility tests on vehicles and other Land equipment is normally limited to between 500 kHz and 200 MHz. Ref 4 Test Methods NCS07, NCS08 and NCS09 offer guidance.

g. Guidance on Radiated Susceptibility Measurements

Equipment level radiated susceptibility tests are not fully representative of a complete installation, particularly at low frequencies. Hence, some platform level radiated susceptibility testing is essential to demonstrate that safety critical systems (e.g. vehicle controls) will remain operational within In-Service and civilian environments.

Land service equipment on the battlefield is unlikely to experience significant externally generated fields at frequencies below 500 kHz. Therefore radiated susceptibility tests on a platform are normally limited to between 500 kHz and 18 GHz. Even then, the upper frequency may be reduced provided that the operational scenario can justify its reduction.

If a vehicle platform is physically separated from other systems by more than 1m, then the magnetic field radiated susceptibility measurements (due to 50/60Hz power lines for example) do not need to be controlled or measured unless magnetically sensitive co-located equipment are present, e.g. CRT displays.

Unless otherwise specified, the platform under test should withstand electric field environments of 30 V/m (minimum) and 50V/m (preferred); and 100V/m for Safety Critical Equipment, with AM, FM and 1KHz square wave modulations applied as applicable.

h. Guidance in the Use of Test Sites Equipped with Turntable and Dynameter

The following is a general description of the EMI tests performed within a large anechoic chamber equipped with turntable and dynameter to support the platform under test.

Move the platform into the chamber onto the turntable and dynameter then strap or secure the platform to the floor. Ensure vehicle exhausts are funnelled outdoors. Place a fan on the chamber floor in front of the platform's radiator to provide adequate forced air-cooling. Monitor cockpit displays with the placement of Closed Circuit Televisions (CCTV) cameras at the driver's position. If an available option, route the platform's internal engine diagnostics to the Control Room by fibre optic cabling to monitor and record all diagnostics and failure codes.

At frequencies where the system is small compared to the wavelength of the illumination frequency (normally below 30 MHz), it is necessary to illuminate the entire system uniformly or to radiate the system such that appropriate electromagnetic stresses are developed within the system. Where illumination of the entire system is not practical, various aspects of the system's major physical dimensions should be illuminated to couple the radiated field to the system structure. At frequencies (normally above 400 MHz) where the size of the system is large compared to the wavelength, localized (spot) illumination is adequate to evaluate potential responses by illuminating specific apertures, cables and subsystems. 30 to 400 MHz is a transition region from one concept to the other where either technique may be appropriate, dependent upon the system and the environment simulator.

For radiated emissions testing, place the test antenna at an appropriate distance from the front of the platform. Run the platform's engine at idle. Rotate the platform using the

turntable for radiated emission scans on all four sides of the platform under test. Repeat measurements while operating the engine at 600 rpm and 1400 rpm.

For radiated susceptibility testing, place the radiating test antenna at an appropriate distance from the platform. If possible, set the platform to cruise at 50 kilometres per hour using cruise control. Expose the platform to electric field strengths of 30 V/m (minimum) and 50V/m (preferred), with AM, FM and 1 kHz square wave modulations applied as applicable. If possible, repeat the radiated susceptibility test at 100V/m for safety critical equipment, (modulated as described). Use the turntable to rotate the platform into position for radiated susceptibility tests on all four sides.

If Dynameter is not available, options include disconnection of the vehicle's drive shaft or elevating the vehicle such that the wheels or tracks are above the ground surface. However safety concerns and precautions must be fully considered.

5.2.9 Requirement #9 – Electromagnetic Compatibility, Intra-System

a. General - To ensure the electromagnetic compatibility of the platform to an acceptable operational performance level and with an appropriate safety margin level. To protect safety critical equipment from on-platform transmitters.

b. Requirements - The platform should be electromagnetically compatible with itself such that operational performance requirements are met. Compliance should be verified by a platform-level EMC Source-Victim (S/V) test.

   Margins should be provided based on system operational performance requirements, tolerances in platform hardware, and uncertainties involved in verification of platform-level design requirements. Safety critical and mission critical platform functions shall have a margin of at least 6dB. EIDs shall have a margin of at least 16.5dB of maximum no fire stimulus (MNFS) for safety assurances and 6 dB for MNFS for other applications.

   Protection of safety critical equipment from on-board transmitters is necessary.

c. Guidance - Before commencing Intra-System EMC verifications, the following tests and verifications should be performed:

   1. Requirement #4 Grounding and Bonding Measurements;
   2. Ensure all installed radios are compliant with the appropriate specification with respect to transmitter output power and receiver sensitivity;
   3. Measure and record the VSWR between the transmitter and the Antenna Tuning Unit. Verify that the VSWR complies with the equipment specification limits and repeat the measurement at all frequencies for which measurements are to be made.

d. Guidance in developing the S/V Matrix:

   1. All Safety Critical Equipment shall be included in the S/V Matrix;
   2. The defined design requirements of equipment and subsystems should serve as the basis for the selection of appropriate Modes of Operation and corresponding susceptibility criteria to apply as failure criteria;
   3. Equipment or subsystem Modes of Operation to select could either be the operating mode capable of producing the highest levels of RF susceptibility or emissions; or the operating mode that will see typical usage, say, 80% of the time;
   4. Include all high current sources as applicable: horn, windshield wipers, windshield washer pumps, heaters, fans, defroster, winches, water/kitchen boiling elements, turret rotation and external AC/DC generators;
   5. The Design Authority should identify which equipment and subsystems are required to operate with the platform under test in a vehicle run state, during ignition turn-over

(either ON or OFF), a vehicle ignition OFF state, a vehicle battery state; and/or with the platform electrically powered by external AC/DC generator.

e. Guidance in developing susceptibility criteria:

1. Susceptibility criteria should be measurable criteria with defined tolerance levels clearly stated and defined before start of test;
2. Where a susceptibility condition is found, the threshold of susceptibility in terms of transmitter power should be established at the most susceptible frequency. Details of the susceptibility should be recorded including as applicable, video recordings of malfunctioning systems, photographs of visual interference, recordings of audible interference and data files or printouts of system error reports etc.

f. Guidance concerning radar, radio communication and intercom equipment and subsystems:

1. The S/V Matrix should address all differing wave shapes capable of being received or transmitted by on-platform radio and radar receivers and transmitters. For example, digital voice, digital data and secure voice or data operating modes may all function with a similar wave shape and need only be considered once by the S/V Matrix for any particular radio. Conversely, both AM-voice and FM-voice operating modes should be evaluated separately by S/V Matrix;
2. The S/V Matrix should consider both on-platform and off-platform (i.e. remote) antenna capabilities;
3. A remote radio communication site may be needed at a distance of 100m or more in order to fully exercise radio communication equipment and subsystems;
4. Radio and radar transmitters should be operated at their maximum levels of power output, plus 3dB, particularly for EMC tests involving safety critical equipment and subsystems;
5. The performance of radio and radar receivers should be monitored for susceptibility criteria while set at their minimal discernable level of signal reception;
6. As a minimum selected frequencies for fixed frequency tests should include frequencies at the band edges and at a mid-band frequency;
7. Both fixed frequency and frequency hopping modes of operation should be considered, as applicable. The hop set should include frequencies evenly distributed across the frequency band and the hop set frequencies should be detailed in the test report;
8. The Design Authority should specify whether radio communication is to be maintained with the platform under test in a vehicle run state, during ignition turn-over (either ON or OFF), a vehicle ignition OFF state, a vehicle battery state; and/or with the platform electrically powered by external AC/DC generator.

g. Protection of Equipment from On-board Transmitters

The basic concern is to ensure that equipment will operate without any degradation in the presence of electromagnetic fields generated by the on board antenna transmissions. Ref [2] Part 13 describes test procedures to follow to ensure that EMC will be maintained following minor modifications (e.g. due to ageing or deviations during production) by application of an immunity margin to be verified during the performance of platform EMI tests. That is, the output power of on-board transmitters is increased by an amount specified by the Design Authority (typically 3dB), to ensure installed equipments and subsystem continue to operate without degradation in performance. Measurements are only performed in the frequency bands in which platform transmitters operate. Power amplifiers or substitute transmitters can be used for increasing the transmit power to on-board antenna systems.

If the required safety margins are not achieved then operating procedures should be introduced to either prevent these critical frequencies from being used or reducing the output power of the transmitter. Where safety margins are not achieved for safety critical systems, remedial design should be considered to achieve a desired level of risk mitigation.

5.2.10 Requirement #10 – Antenna Radiation Pattern

a. General - This Requirement determines azimuthal antenna radiation patterns and antenna gains of radio communication omni-directional antenna systems operating in the frequency range of 1 MHz to 450 MHz when installed on Land platforms.

b. Requirements - Ref 1, details specific tests and provides limits to apply in the measurement and validation of:

   1. Radiation pattern at HF and VHF/UHF;
   2. Antenna gain at HF;
   3. Antenna gain at VFH/UHF.

c. Guidance - Before the start of antenna tests and measurements, ensure the following requirements have first been completed and satisfactorily met:

   1. Requirement #1 Configuration Check, according to the latest installation drawings. Any subsequent physical adjustments, additions or removal of sub-systems after test will invalidate previous results;
   2. Requirement #4 Grounding and Bonding Measurements;
   3. Measure and record the VSWR between the transmitter and its Antenna Tuning Unit. Verify that the VSWR complies with the equipment specification limits. Repeat the measurement at all frequencies for which antenna radiation patterns are to be measured:
   4. Requirement #5 RADHAZ Survey.
   5. The test site must be electrically quiet and signals resulting from reflections from buildings and fences etc. must not result in producing composite signal variation of more than 1 dB at the measurement receive antenna. The suitability of the test site and measuring system should be demonstrated over the frequency range used for the antenna system tests.
   6. The separation between transmitting and receiving antennas should not be less than 30 times the maximum height of the transmitting antenna.
   7. Where antenna lengths are adjustable the lengths to be used over defined frequency ranges should be specified.
   8. The frequency spacing or interval between measurement/plots should be specified; for example, at 5 MHz intervals.
   9. Unless otherwise specified, five degree spacing is an acceptable angular step size.
   10. Document the range (maximum - minimum level) of radiated levels on a polar plot and the directions in which the maximum and minimum levels occur for each measurement frequency and installation configuration. Data analysis [using Ref 1] can then be used to predict radio range reduction with reduced antenna gain for ground-ground radio communications; but not Line of Sight.
   11. The variation between maximum and minimum radiation should be less than 6 dB. If this requirement is not satisfied, then the operational communications range requirement should be examined to see if it is satisfied, even in the direction of lowest antenna gain. Consideration should also be given to the use of an alternative antenna position or an improved ground plane to provide improved antenna performance.

12. Ref 1 presents a graphical technique that allows comparison of various platform antenna configurations by calculation of a Figure of Merit (M) and averages the polar plot data for a particular antenna configuration, over all the measurement frequencies. The larger the number M, the more omni-directional the antenna configuration, averaged over all the measurement frequencies. Figure of Merit (M) is a simple-to calculate and useful statistic for judging and comparing the performance of antenna configurations. The value of M can range between 0 and 1. For armoured vehicles, M has been found to fall in the range 0.70 to 0.95 with a median value of around 0.87. A value under 0.8 would probably be operationally unacceptable but that is for the Design Authority to decide.

5.2.11 Requirement # 11 – Spurious and Harmonic Emissions From Antenna Terminals

a. General - This requirement is applicable to the antenna terminals of transmitters, receivers, and amplifiers. The requirement is not applicable to equipment designed with antennas permanently mounted to the EUT. The transmit mode portion of this requirement is not applicable within the EUT necessary bandwidth and within ±5 percent of the fundamental frequency.

b. Requirements

1. Ref 4 Test Methods NCE03 and NRE03
2. Ref 2 Parts 16 and 26
3. Guidance - Guidance on test methods and interference limits to apply to control harmonic and spurious emissions from on-board antennas or antenna couplers, at antenna terminals can be adapted from Ref 4, Test Methods NCE03 and NRE03.

5.2.12 Requirement #12 – Degradation of Communications While Stationary or on the Move

a. General - The maximum range at which satisfactory radio communications is obtainable is dependent on antenna heights, type of terrain and the ambient radio frequency noise level at the receiver antenna. The ambient noise level at the receiving antenna comprises atmospheric noise, galactic noise, and locally generated (man-made) noise. Refer to AECTP 250 series Leaflet 252 [Ref 19] for a description of the radio noise ambient in greater detail.

The impact of locally generated (man-made) noise (i.e. vehicle EMI) to on-board radio communication systems can be assessed using procedures described by Ref 1.

Procedures described by Ref 2, Supplement 1 to Part 26, can be used to control noise voltage at the receive antenna terminals from EMI from distant sources.

b. Requirements - The procedures described by Ref 1 are suitable for predicting radio communication degradation and radio range deduction of a radio installation within the platform under test, caused by electromagnetic interference from the vehicle (and due to vehicle electrical systems and installed equipment).

The procedures described by Ref 2, Supplement 1 to Part 26, are particularly useful for platforms and radio communication shelters to be deployed at a fixed location.

c. Guidance –Ref 1 takes into account the cumulative electromagnetic emission profile of the platform under test to predict radio communication degradation and radio range reduction, while the vehicle is stationary or on the move. The platform's cumulative electromagnetic profile can include emissions due to track, wheel or brake static, the vehicle's electrical system (e.g. ignition, generator, air-conditioning, windscreen wipers, instruments etc.) or that due to other installed equipment in the platform (e.g. thermal imaging, computers, visual display units, printers etc.). Procedures are usable over the frequency range of 1MHz to 400MHz for both voice and data radio circuits. Ref 1 also details reporting requirements for communication range degradation tests.

Ref 2, Supplement 1 to Part 26, assumes an electromagnetic environment for atmospheric noise, galactic noise and man-made noise from distant sources as published by ITU-R P-372-8 (formerly CCIR Report 322) [Ref 20] for any selected geographical location worldwide. (Refer to Ref 19). It then assumes that the vehicle EMI profile is 3dB higher than this environment and establishes an allowable noise voltage limit at the receive antenna terminals. Supplement 1 also assumes that vehicle EMI, taken as radio noise, has first been controlled by meeting platform EMI radiated emission limits. The technique employed by Ref 2 is particularly useful for platforms and radio communication shelters deployed at fixed locations. (Refer to Requirement #8 Electromagnetic Interference Tests). The technique is usable to frequencies up to 400MHz, and allows for varying radio communication bandwidths.

Before commencement of range degradation tests, the following tests should be performed and requirements satisfactorily met:

1. Requirement #4 Grounding and Bonding Measurements;
2. Requirement #8 Electromagnetic Interference Tests;
3. Ensure all installed radios are compliant with the appropriate specification with respect to transmitter output power and receiver sensitivity;
4.. Measure and record the VSWR between the transmitter and its Antenna Tuning Unit. Verify that the VSWR complies with the equipment specification limits and repeat the measurement at all frequencies for which measurements are to made;
5. Requirement #10 Antenna Radiation Pattern must be completed for mobile range degradation. Ensure there are no sharp nulls in the azimuth radiation pattern of the vehicle antennas which could significantly affect the path loss;
6. Visually examine the radio installation to ensure that all connectors are secured and there are no damaged cables.

Additional testing on Induced Disturbance Voltages at Installed Antennas can be performed to:

a. Ref 1 DRE03, Class A requirements; and
b. Ref 2 art 16, SA06S, Class 2 requirements.

If a radio can be connected to more than one antenna, then measurements should be repeated for each antenna.

If the measurement system involves a direct connection to the antenna terminals or antenna coupler, then ensure the grounding path of the antenna cable is maintained by insertion of a ‘T adaptor’ at the input of the radio system. (Note that by removal of the adaptor’s centre pin on the radio side, the RF path is from the antenna to the measurement receiver).

The RF cabling associated with the measurement test system should be ferrite-loaded to avoid a second ground path and a coupling path that can interfere with the measurement.

Perform measurements with the antenna-under-test in its ‘normal use’ position and ‘tie down’ position, as applicable.

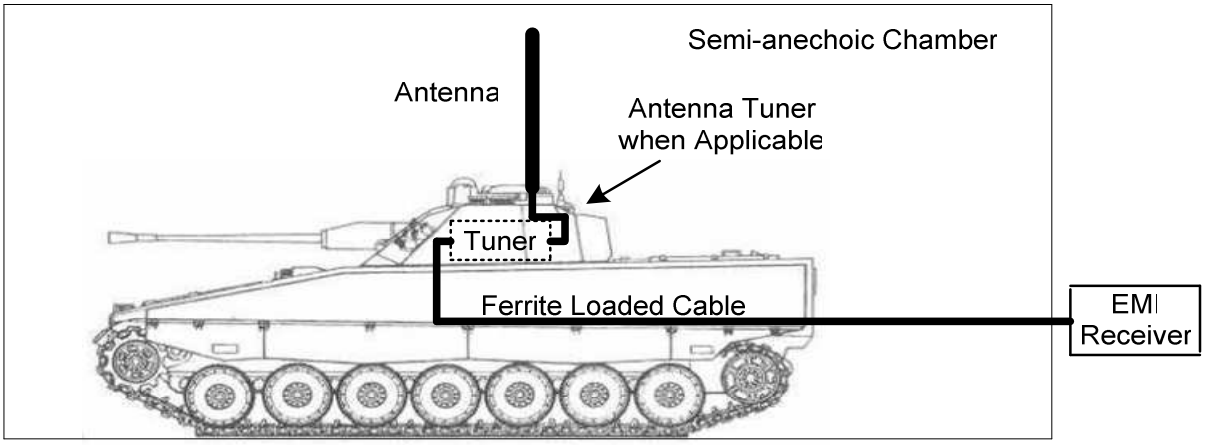

Figure 507-3 Test Set-up for VHF Antennas

5.2.13 Requirement #13 – Emission Control or EMCON

a. General - EMCON generally provides for protection against detection by hostile forces who may monitor the electromagnetic spectrum for any emissions that indicate that presence and operation of military electronics. These “unintentional” emissions may originate from spurious signals, such as local oscillators, being present at antennas or from electromagnetic interference emissions from platform cabling caused by items such as microprocessors.

b. Requirements - EMCON requirements are as detailed in MIL-STD-464 [Ref 21]. Unintentional electromagnetic radiated emissions should not exceed -110 dBm/m2 at one nautical mile (-105 dBm/m2 at one kilometre) in any direction from the system over the frequency range of 500 kHz to 40 GHz, when using the resolution bandwidths listed in **Table 507-2.** Compliance should be verified by test and inspection.

Frequency Range (MHz)	6 dB Bandwidths (kHz)
0.5 – 1	1
1 – 30	10
30 – 1000	30
1000 – 40000	100

Table 507-2 EMCON Bandwidths

Notes:

1. Video filtering should not be used to bandwidth limit the receiver response.
2. Larger bandwidths may be used, but no correction factors are permissible.

c. Guidance - The appendix to Ref 21 provides detailed descriptions and guidelines concerning EMCON.

5.2.14 Requirement #14 – Hazards of Electromagnetic Radiation to Ordnance (HERO)

a. General - These requirements address on-platform HERO tests and validations concerning the stowage and operation of an ordnance sub-system installed on a vehicle. Consideration is given to the firing circuits within the vehicle and to the on-board transmitters. As noted under Requirements below, it will be necessary to ensure that the HERO Test Program addresses all life cycle aspects of the platform, including (as applicable) onboard stowage, normal in-service operation (including loading, unloading, pre-launch modes and immediate post launch), test and training. Sub-system tests on the ordnance to cover storage, transportation and handling should have been conducted first. Since the onboard tests require an 'instrumented' ordnance system, they will frequently be conducted immediately following the stand-alone tests.

   This Requirement is therefore related to Ref 5 that addresses related HERO requirements of ordnance subsystems and systems including exposure to high intensity RF fields, personnel borne ESD, helo-borne ESD, lightning and Electromagnetic Pulse (EMP).

b. Requirements - Tests or assessments of the ordnance system's ability to survive and operate safely and reliably when installed on the Land Platform must be carried out. Tests in this configuration are generally necessary since the platform cabling connected to the ordnance system may modify its EM characteristics. Moreover the fields from on-board transmitters may exceed or have different impedance characteristics from those used during ordnance system HERO tests. HERO tests in the loading and loaded configuration should therefore be carried out using all onboard transmitters and to demonstrate clearance to the EME specified for the platform. These tests will require the use of 'instrumented' EIDs as defined in Ref 5 Leaflet 508/3.

   Electromagnetic Vulnerability (EMV) tests to ensure all the electronics in the ordnance system operate safely and reliably in the pre and post launch phases may also be required if not addressed as part of the EMV tests described in Ref 5 leaflet 508/1.

   HERO Safety Margins should be provided based on system operational performance requirements, tolerances in system hardware, and uncertainties involved in verification of system-level design requirements. These are discussed in full in Ref 5 leaflet 508/3 and the same principles apply when setting margins for platform level tests.

   Tests should also be conducted to measure the EME at the designated stowage positions of electrically initiated ordnance. The levels found should be compared to the safe levels established during HERO tests.

   Where the platform contains extensions to the firing lines to EIDs (e.g. direct lines to a launch control panel for say smoke grenade dischargers), tests to ensure platform switching transients do not induce energy onto the firing lines above a Safe Margin below the MNFS should be conducted. These require the firing lines to be monitored with special instrumentation or storage oscilloscope.

c. Guidance - Refer to Ref 5 Leaflet 508/3 for more detail on instrumentation, conduct of electrical munitions tests, and HERO Safety Margins to apply.

   Refer to Ref 5 Leaflet 508/1 for detail concerning an EMV Test Program.

   National test and validation guidance is provided by Ref 21, Def Stan 59-411 [Ref 22] MIL-HDBK-240 [Ref 23] and GAM DRAM 01 [Ref 24] and GAM DRAM 02 [Ref 25].

5.2.15 Requirement #15 – Electromagnetic Pulse

a. General - This requirement ensures the platform will meet its operational performance requirements after being subjected to a specified EMP environment. This requirement is not applicable unless specified by the Procurement Authority. However, Mission Critical Systems shall be HEMP survivable.

b. Requirement - The full threat waveform and amplitude as detailed by the Design Authority.

An unclassified EMP high amplitude (exo) waveform and amplitude is defined by Ref 4, Test Method NRS03-1 (and is identical to that described by Ref 21). The classified HEMP and SREMP waveform requirements are provided in STANAG [Ref 26].

Both positive and negative amplitudes of this waveform and amplitude should be applied.

Different options are available to the Design Authority in which to express the EMP requirement. For example, the EMP requirement could be stated in terms of the time-after-exposure that the platform has to meet its operational performance requirements, (e.g. immediately after exposure to an EMP or within 15 minutes following EMP exposure).

c. Guidance - Refer to Ref 26 for detailed characterization of a nuclear event.

Refer to NATO AEP-18 [Ref 27] for test and verification guidance.

5.2.16 Requirement #16 – Shielded Effectiveness Tests

a. General - This requirement ensures the platform will serve as an adequate electromagnetic barrier by providing specified levels of RF shielding. This requirement is not applicable unless specified by the Design Authority.

b. Requirements - Unless otherwise specified, the minimal acceptable levels of electromagnetic shielding afforded by the platform is 60dB at the following test frequencies:

1. 200 kHz, Magnetic Field;
2. 20 MHz, 1 GHz and 10 GHz, Electric Fields.

c. Guidance - The Design Authority should specify whether shielded effectiveness tests are a requirement since many military vehicle doors, ramps and hatches are only provided with weather seals and not electromagnetic elastomer material. Also, the typical usage of Land Platforms is often with hatches and ramps fully open, particularly in hot, dry locales. Regardless, shielded effectiveness tests may be needed to ensure adequate protection is afforded to COTS or MOTS equipment and sub-systems.

Measure shielded effectiveness about the major platform penetrations. Examples include vehicle hatches, doors, ramps, panels and aperture/air vents. The engine compartment hoods/bonnet is not normally considered.

AECTP 510 leaflet 1 [Ref 28] provides recommended test procedures.

Other documentation offering guidance includes:

1. Ref 4;
2. Ref 2, Parts 15 and 25, for guidance on test methods and interference limits to assess coupling and shielding. Transfer impedance is measured in the frequency range from 30Hz to 30MHz and coupling attenuation in the frequency range from 30Hz to 10GHz;
3. Ref 10 for recommendations on G/B design and installation;
4. MIL-STD-220 [Ref 29] details procedures to measure insertion loss of radio frequency filters.

6 APPLICABLE DOCUMENTS

6.1 Referenced

Ref 1	Def Stan 59-411 Part 4		Electromagnetic Compatibility, Part 4, Platform and System Tests and Trials
Ref 2	VG 95370		Electromagnetic Compatibility; Electromagnetic Compatibility of and in Systems (in German only)
		Part 1	Fundamentals (applicable to Parts 10 through 17)
		Part 10	Test Method for Interference Currents
		Part 11	Test Method for Interference Voltages
		Part 12	Test Method for Radiated Emissions
		Part 13	Test Methods for Safety Margins Against Generated System Field Strengths
		Part 14	Test Methods for Safety Margins for Conducted Susceptibility
		Part 15	Test Methods for Coupling and Shielding
		Part 16	Test Methods for Interference Voltages at Receiving Antenna Terminals
		Part 17	Test Methods for Immunity towards External Field Strengths
		Part 22	Limits for Radiated Emissions
		Part 23	Safety Margins for Radiated Susceptibility
		Part 24	Safety Margins for Conducted Susceptibility
		Part 25	Notes for Establishing Limits for Coupling and Shielding
		Part 26	Limits of Interference for Interference Voltages at Receiving Antennas; and Supplement 1 to Part 26
		Part 27	Limits for Immunity to External Field Strengths
Ref 3	Directive 2004/104/EC		Radio Frequency (Electromagnetic Compatibility) of Vehicles
Ref 4	AECTP 501		Electrical / Electromagnetic Environmental Effects Test and Verification – Equipment and Sub-System Tests
Ref 5	AECTP 508		Electrical / Electromagnetic Environmental Effects Test and Verification Leaflet 508/1 – Guidance for Testing the Electromagnetic Vulnerability of Ordnance Systems
			Electrical / Electromagnetic Environmental Effects Tate and Verification Leaflet 508/3 – Hazards of Electromagnetic Radiation to Ordnance (HERO) Test Procedures
Ref 6	IEC 61000-4-6		Electromagnetic Compatibility (EMC) Part 4: Testing and Measurement Techniques; Section 6: Immunity to Conducted Disturbances Induced by Radio- Frequency Fields
Ref 7	SDIP-29		NATO TEMPEST Requirements and Evaluations Procedures
Ref 8	NACSEM 5112		NONSTOP Evaluation Techniques
Ref 9	MIL-HDBK-1857		Grounding, Bonding and Shielding Design Practices

Ref 10	VG 95375	Fundamentals and Measures for Development of Systems, Grounding
Ref 11	VG 95376	Fundamentals and Measures for Development of Systems, Screening
Ref 12	STANAG 2345	Evaluation and Control of Personnel Exposure to Radio Frequency Fields 3 kHz to 300 GHz
Ref 13	ECC/REC/ (02)04	Measuring Non-Ionising Electromagnetic Radiation (9 kHz – 300 GHz)
Ref 14	ANSI/IEEE C95.3	Recommended Practice for Measurements and Computations of Radio Frequency Electromagnetic Fields With Respect to Human Exposures to Such Fields 100 kHz – 300 GHz
Ref 15	EU Directive	2006/95/EC (Low Voltage Directive)
Ref 16	AECTP 259	Intra-System Electromagnetic Environments – Electrical Power Quality
Ref 17	STANAG 4134	Electrical Power Characteristics of Rotating 28 Volt DC Generating Sets
Ref 18	STANAG 4135	Electrical Characteristics of Rotating Alternating Current Generators
Ref 19	AECTP 252	Radio Frequency Ambient Environments
Ref 20	ITU-R P-372-8	Characteristics and Application of Atmospheric Radio Noise Data; International Radio Consultative Committee; Geneva, Switzerland
Ref 21	MIL-STD-464	Electromagnetic Environmental Effects Requirements for Systems Ref 22 Def Stan 59-411 Electromagnetic Compatibility
Ref 23	MIL-HDBK-240	Hazards of Electromagnetic Radiation to Ordnance (HERO) Test Guide
Ref 24	GAM DRAM 01	General Specification for Electro Explosive Devices and their Integration in Munitions against the Effect of Non-Ionising Electromagnetic Radiation
Ref 25	GAM DRAM 02	Security Instructions to be established under various conditions of use for Systems and Munitions containing Electro-Explosive Devices in the Electromagnetic Environment
Ref 26	STANAG 4145	Nuclear Survivability Criteria for Armed Forces Material and Installation
Ref 27	AEP-18	The NATO Users Guide to EMP Testing and Simulation
Ref 28	AECTP 510/1	Electrical / Electromagnetic Environmental Effects Test and Verification Leaflet 510/1 Electromagnetic Shielding Enclosures Test Procedures
Ref 29	MIL-STD-220	Method of Insertion Loss Measurement

6.2 Information Only

AECTP 500	Electrical/Electromagnetic Environmental Verification and Tests
MIL-STD-461	Requirements for the Control of Electromagnetic Interference Characteristics of Subsystems and Equipment
VG 95373-1	Electromagnetic Compatibility – Electromagnetic Compatibility of Equipment. Part 1 Fundamentals

VG 95374-4 Annex 3	Electromagnetic Compatibility (EMC) including Electromagnetic Pulse (EMP) and Lightning Protection - Programme and Procedures - Procedures for Systems and Equipment, Advice for Determination of Required Classes of Limits for Equipment
AAP55	NATO E3 Terms and Definitions Glossary

7 ACRONYMS

The following acronyms are used:

AC	Alternating Current
APC	Armoured Personnel Carrier
C^3I	Command, Control, Communications and Intelligence
CCTV	Closed Circuit Television
CDN	Coupling and Decoupling Networks
COMSEC	Communication Security
COTS	Commercial Off the Shelf
CRT	Cathode Ray Tube
CW	Continuous Wave
DC	Direct Current
E3	Electromagnetic Environmental Effects
EID	Electrically Initiated Device
EM	Electromagnetic
EME	Electromagnetic Environment
EMC	Electromagnetic Compatibility
EMCON	Emission Control
EMI	Electromagnetic Interference
EMP	Electromagnetic Pulse
EMV	Electromagnetic Vulnerability
ESD	Electrostatic Discharge
EUT	Equipment Under Test
EW	Electronic Warfare
G/B	Grounding/Bonding
HEMP	High Altitude Electromagnetic Pulse (i.e. exo-atmospheric)
HERF	Hazards of Electromagnetic Radiation to Fuel
HERO	Hazards of Electromagnetic Radiation to Ordnance
HERP	Hazards of Electromagnetic Radiation to Personnel
LISN	Line Impedance Stabilization Network
MNFS	Maximum No Fire Stimulus
MOTS	Military Off the Shelf

OATS	Open Air Test Site
RADHAZ	Radiation Hazard
RAM	Radio Frequency Absorbent Material
RCS	Radar Cross Section
RF	Radio Frequency
RMS	Root Mean Squared
SREMP	Source Region Electromagnetic Pulse
S/V	Source/Victim
VIP	Vehicle Interface Panel
VSWR	Voltage Standing Wave Ratio

8 DEFINITIONS

As defined in NATO AAP-55

CATEGORY 508

INTRODUCTION TO ORDNANCE TEST AND VERIFICATION PROCEDURES

1 AIM 508-2

2 APPLICABILITY 508-2

3 STRUCTURE 508-2

4 APPLICABLE DOCUMENTS 508-2

4.1 Referenced 508-2
4.2 Information Only 508-2

5 ACRONYMS 508-3

6 DEFINITIONS 508-3

CATEGORY 508

Introduction to Ordnance Test and Verification Procedures

1 AIM

The aim of this category is to define Ordnance Assessment and Test Procedures to be used in determining the safety and suitability for service of munitions containing Electrically Initiated Devices (EIDs) and associated electrical/electronic systems/subsystems that are exposed to the following environments:

a. The Electrostatic Environmental specified in AECTP253 Ref [1] for NATO Forces.

b. The Lightning Environmental conditions specified in AECTP 254 Ref [2] for NATO Forces.

c. The Nuclear Electromagnetic Pulse specified in AECTP 256 Ref [3] for NATO Forces.

d. The Electromagnetic Radiation Environment specified in AECTP 258 Ref [4] for NATO Forces.

2 APPLICABILITY

This Category applies to all munitions throughout their specified life cycle.

3 STRUCTURE

This category is divided in to five leaflets covering the verification and tests of munitions systems containing EIDs against the following environments:

Leaflet 1	Ordnance Electromagnetic Vulnerability of a complete munitions system containing electronics
Leaflet 2	Electrostatic Discharge (based on STANAG 4239 & AOP 24)
Leaflet 3	Electromagnetic Radiation (based on STANAG 4324)
Leaflet 4	Lightning (based on STANAG 4327 & AOP 25)
Leaflet 5	Nuclear Electromagnetic Pulse (based on STANAG 4416)

4 APPLICABLE DOCUMENTS

4.1 Referenced

Ref 1	AECTP 253	Electrostatic Charging Environment
Ref 2	AECTP 254	Atmospheric Electricity and Lighting Environment
Ref 3	AECTP 256	Nuclear Electromagnetic Pulse Environment
Ref 4	AECTP 258	Electromagnetic Radiation Environment

4.2 Information Only

AOP 24	Electrostatic Discharge, Munitions Assessment and Test Procedures
AOP25	Lightning Discharges Assessment and Tests Rationale and Guidance

STANAG 4234	Electromagnetic Radiation (Radio Frequency) Test Information to Determine the Safety and Suitability for Service of Electro-Explosives Devices and Associated Electronic Systems in Munitions and Weapon System
STANAG 4239	Electrostatic Discharge, Munitions Test Procedures
STANAG 4327	Lightning Munition Assessment and Test Procedures
STANAG 4416	Nuclear Electromagnetic Pulse Testing of Munitions Containing Electro-Explosive Devices

5 ACRONYMS

AECTP Allied Environmental Conditions and Test Procedures

EID Electrically Initiated Device

6 DEFINITIONS

The following definitions are used in the AECTP 508 Series of Leaflets (with their source shown in brackets where applicable):

Action Integral

Action integral ($\int i^2 dt$ measured in A^2s or joules/ohm) defines the energy in any portion of the current path per ohm resistance.

Actual Transient Level

The actual transient level is the level of transient voltage and/or current which appears at the equipment interfaces as a result of the external environment. This level may be less than or equal to the Transient Control Level but should not be greater.

Air Discharge (AAP-55)

A transfer of electrical charge through the air between bodies of different electrostatic potential.

Arc (AAP-55)

An electrical discharge characterized by high luminosity, temperature, current and high luminosity.

Aperture Flux (AAP-55)

The magnetic flux of lightning origin inside a weapon that has penetrated through electromagnetic apertures such as a dielectric cover or joints and gaps in the skin. Its waveform is that of the external magnetic flux.

Arc Root

Point of attachment of the Arc at the materiel.

Attachment Point (AAP-55)

Points on a weapon surface at which lightning current enters or leaves.

Note: There must be at least two such points and due to the 'swept stroke' effect with a moving vehicle, there may be many more.

Bonding (AAP-55)

In electrical engineering, the process of connecting together metal parts so that they make low resistance electrical contact for direct current and lower frequency alternating currents.

Bridge Wire (BW) EID (AAP-55)

An Electrically-Initiated Device where the power dissipated by the passage of current through a resistive wire is used to initiate by heating a primary explosive in intimate contact with the wire.

Bulk Current Injection (BCI) (AAP-55)

A test method in which current is injected onto a cable or cable harness to evaluate system or component immunity.

Bulk Current Measurement

A test technique used to measure the current induced in a cable or cable loom by a low level external EM field. The ratio between the external field strength (in V/m) and the current induced is the transfer function.

Bulk Current Monitoring (BCM)

A test technique used to measure the current induced in a cable or cable loom by a low level external EM field. The ratio between the external field strength (in V/m) and the current induced is the transfer function.

Charge Transfer

The time integral of current transferred in a particular phase of the flash (e.g. the continuing current) or in the whole flash.

Common Mode Voltage (AAP-55)

The mean of the phasor voltages appearing between each conductor and a specified reference, usually earth or frame.

Computed Transient Level [CTL]

The transient amplitude given by modelling at full threat level.

Conducting Compostition (CC) EID (AAP-55)

An Electrically-Initiated Device where a primary explosive is intimately mixed with a small quantity of graphite, powdered metal or other conducting material, which, when placed in a suitable container, allows an electrical current to flow between two electrodes, thus generating sufficient heat to function the composition.

Contact Discharge (AAP-55)

A transfer of electrical charge between bodies of different electrostatic potential through direct contact.

Corona (AAP-55)

The ionisation of a volume of air around a conducting body under high electric field conditions. It occurs particularly at sharp points, edges and protuberances, where the intensity of the electric field is enhanced by the local geometry to a value equal to the corona threshold.

Diffusion Flux (AAP-55)

The magnetic flux that has penetrated by spreading through a conducting portion of the skin. The diffusion process distorts and attenuates the external flux. The amplitude depends on the resistivity of the material through which it has spread.

Direct Effects

The physical effects due to the attachment or passage of the lightning channel currents. (I.e. metal burn through, hotspots and ohmic heating etc.).

Direct Strike

A direct strike is a lightning discharge, which attaches directly to the materiel considered, causing lightning currents to flow in parts or the whole of that materiel.

Distant Flash (Far Field) (AOP38)

A far field flash is a lightning discharge, which occurs at such a distance that the only coupling to the materiel is by electromagnetic radiation.

Dudding (AAP-55)

The inability of an Electrically-Initiated Device to function as intended because the physical or electrical properties have been altered due to the application or repeated application of energy below the level required to initiate the device.

EID Firing System

A complete system including the Electrically-Initiated Device, power supplies, and all associated electrical and electronic components and circuitry necessary for normal Electrically-Initiated Device firing. In some systems this may include circuitry within the launcher or platform.

EID Thermal Time Constant (AOP-38)

The time the bridge wire, the film or the conductive composition takes to reach 63% of the equilibrium temperature when a step function of power is applied to the leads of the Electrically-Initiated Device.

Alternatively, in some countries this is defined as the ratio between the no-fire threshold energy, measured using very short pulse widths, and the no-fire threshold power, measured using long pulse widths.

Electrically-Initiated Device (EID) (AAP-55)

Any single shot component or sub-assembly initiated by electrical means and having an explosive, pyrotechnic, or mechanical output resulting from an explosive, pyrotechnic, laser or electrothermal action.

Electrically Representative Material (AOP-38)

A material is called an "electrically representative material" (ERM) in the NEMP environment, if the real part (R) and imaginary part (X) of its radio frequency impedance (R+jX) in the frequency band 1 kHz-100 MHz are similar to those of the original material which has to be simulated.

Electronic Sub-Systems

Discrete electronics, microelectronic devices, microprocessors and associated software designed to control or supply the switching stimuli for electrical/electronic firing circuit switches.

Electrostatic Discharge (ESD) (AAP-55)

A transfer of electric charge between bodies of different electrostatic potential in proximity or through direct contact.

Electromagnetic Vulnerability

The characteristic of a system, equipment or device that cause it to suffer degradation in performance of, or inability to perform, its specified task as a result of electromagnetic interference.

Equipment Qualification Level

The actual transient level to which the equipment has been tested and qualified. The EQL must never be less than the TCL plus the agreed margin.

Equipment Transient Level

The transient amplitude up to which the equipment must be designed to operate without malfunction or failure.

Film Bridge EID (AAP-55)

An Electrically-Initiated Device where the power dissipated by the passage of current through a resistive, vacuum deposited film or foil of very small dimensions is used to initiate, by heating, a primary explosive which is in intimate contact with the film or foil.

First Return Stroke (AAP-55)

The current flow along the previously ionized path, occurring when that path is complete from cloud to *ground*.

Flash (AAP-55)

In the domain of electromagnetic environment effects, the total lightning discharge.

Grounding

The bonding of an equipment case, frame or chassis, to an object or vehicle structure to ensure a common potential.

Hazards of Electromagnetic Radiation to Ordnance (HERO) (AAP-55)

The potential for electromagnetic radiation to cause radiation-induced damage or degradation of performance in ordnance containing electrically initiated devices.

Indirect Effects

The effects due to coupling of the lightning's magnetic or electric field. Such effects can arise as a result of either a direct strike or a nearby flash. An example is a transient voltage induced in materiel wiring. See also, 'Aperture Flux' and 'Diffusion Flux'.

Instrumented Electrically-Initiated Device (AOP-38)

An inert EID which has sensors in contact or close proximity to the bridgewire or ERM to measure the thermal energy or power induced. This instrumentation is designed so that it shall not change the radio frequency (RF) impedance of the EED (both in pin-to-pin and pin-to-case modes).

Internal Environment

The transient voltages and currents at the inputs to electrical and electronic equipment caused by the interaction of internal magnetic and electric fields on wiring within the materiel which are generated by the external environment.

Inert Electrically-Initiated Device (AOP-38)

An electrically-initiated device with its explosive material removed. It may have the explosive material replaced by ERM but it retains the bridgewire, foil, etc., from which it is initiated.

The instrument is designed so that it shall not change the radio frequency impedance of the EED (Both pin-to-pin and pin-to-case-modes)

Jet Diverting Electrode

An Electrode used for Arc tests.

Leader (AAP-55)

The preliminary breakdown that forms a low luminous low-current ionised path accompanied by an intense electric field.

Leader Phase Effects

The effects resulting from the attachment of a lightning leader to the materiel.

Lightning (AAP-55)

The total electric or electromagnetic phenomenon that may occur within a cloud between clouds or between a cloud and ground. It can consist of one or more return strokes, plus intermediate or continuing currents.

Lightning Attachments Zones

Because of the sweeping action of the lightning channel, the proportion of the flash experienced by any particular point depends on its location on the vehicle surface. This has led to the concept of dividing the vehicle surface into 3 Zones depending on the probability of initial attachment, sweeping and hang-on, described as follows:-

Zone 1 Surfaces for which there is a high probability of initial lightning flash attachment (leader or return stroke current, entry and exit).

Zone 2 Surfaces of the vehicle for which there is a low probability of initial attachment but a high probability of a lightning flash (return current) being swept by airflow from a Zone 1 point of initial flash attachment.

Zone 3 All other surfaces not in Zones 1 and 2. Such areas have a low probability of flash attachment but may carry substantial lightning current between attachment points situated in Zones 1 or 2. In some Zone 3 areas that current may be due to the whole of the lightning discharge.

Depending on the likely duration of flash hang-on, Zones 1 and 2 may be further divided into Zone A and B regions as follows:

Zone 1A Initial attachment point with low probability of flash hang-on for a time in excess of 50 ms, such as a leading edge.

Zone 1B Initial attachment point with high probability of flash hang-on for a time exceeding 50 ms, such as a trailing edge.

Zone 1C A limited area of an aerospace vehicle surface behind Zone 1A into which a leader attachment may be swept and which may therefore experience a first return stroke attachment.

Zone 2A A swept stroke zone with low probability of flash hang-on for a time in excess of 50 ms, such as a forward or mid position of a Zone 2.

Zone 2B A swept stroke zone with high probability of flash hang-on for a time exceeding 50 ms, such as a trailing edge in Zone 2.

Maximum Allowable Environment

The highest radiated field strength levels to which ordnance can be exposed without exceeding Electrically-Initiated Device safety and/or reliability margins.

Measured Transient Level

The amplitude of the actual response measured during a pulse test.

Minimum Detectable Stimulus (MDS)

The lowest pick-up level which an EID instrumentation system is able to measure. MDS may be expressed in amps, watts or joules depending on the calibration system used.

Minimum Ignition Energy

Minimum electric spark energy that will just ignite a particular mixture of hydrocarbon vapour and air.

Multiple Burst

Randomly spaced groups of short duration, low amplitude current pulses, with each pulse characterised by rapidly changing currents (i.e., high di/dt's). These pulses may result from lightning leader progression or branching. The pulses appear to be most intense at the time of initial leader attachment.

Nearby Flash (AAP-55)

A lightning discharge which does not attach to the weapon or weapon system, but due to its proximity, may induce significant current in the weapon or weapon system either by electric field coupling, magnetic field coupling, ground currents, or by a combination of all three.

No Fire Thresshold (NFT) (AAP-55)

The level at which there is a 0.001 probability of fire at the 95% lower single-sided confidence limit.

Part System Tests

Energetic Material Hazard Assessment Tests made on a complete weapon with propellant and explosives removed but igniters, detonators and fuzes in situ to preserve sparking and electrical characteristics.

Pin-To-Case Mode (AAP-55)

The firing mode of an electro-explosive device which is susceptible to the electromagnetic energy that is applied in common mode or coaxial mode.

Note: This energy is applied between one or more of the pins, whether short circuit or not, and the case.

Pin-To-Pin Mode (AAP-55)

The firing mode of an electro-explosive device which is susceptible to the electromagnetic energy that is applied in differential mode;

Note: This energy is provided between the pins.

Platform (AAP-55)

A mobile or fixed installation such as ship, aircraft, shore station etc.

Note: A platform may be a potential source of electromagnetic environment effects due to its transmitters, but may also be an installation susceptible to electromagnetic environment effects.

Quasi-Co-Axial

A return conductor arrangement, whereby the return current interaction with the test arc or the current flowing in the test object is minimised.

Radio And Radar Radiation Hazards (RADHAZ) (AAP-55)

The risk of inadvertent ignition of Electrically-Initiated Devices and flammables, injury to personnel or malfunction or failure of safety critical electronic systems resulting from exposure to EME in the frequency range 10 kHz to 300 GHz.

Note: For the purpose of this agreement the term HERO has been used to cover RADHAZ effects on Electrically-Initiated Devices and their associated circuits contained in munitions and weapon systems and the frequency range considered is 200 kHz to 40 GHz.

Reliability

Where the inadvertent initiation of an Electrically-Initiated Device or an inadvertent electronic malfunction in an Electrically-Initiated Device firing system degrades the performance of the munition or store but not its safety.

Restrikes

Subsequent return strokes occurring after the first return stroke in a multi-stroke flash are sometimes called restrikes. A restrike will generally cause a reattachment.

Rolling Sphere

A method of determining lightning attachment points by rolling an imaginary sphere of a prescribed diameter around an object, whereby attachments can occur at all points where the sphere touches the object.

Safety

Where injuries to personnel or damage to materiel may occur from the inadvertent initiation of an EID or the inadvertent lifting of a safety break in an Electrically-Initiated Device firing system.

Safety Critical (AAP-55)

The electronic systems in which a failure or malfunction may cause a direct hazard to personnel and/or loss of materiel.

Safety Margin

The minimum required difference between the measured or calculated field strength in which the system or Electrically-Initiated Device is not upset/fired and the specified or required safe field strength – generally expressed in dB.

Safe Separation (AOP38)

The place or area where the risks to personnel and material are acceptable, with regard to the intention or accidental function of a weapon or a munition and the protection provided. Safe separation may be achieved by means of sufficient distance to the explosion point, screens, shelters.

Safe Separation Distance (AOP38)

Launch or released munition: A minimum distance between the delivery system or launcher and the armed munition beyond which the risks of functioning of the munition to personnel and the launch platform or delivery system are acceptable.

Streamers (AOP-55)

Ionised paths or filaments that emanate from corona regions on a conducting body when the field considerably exceeds the corona threshold.

Strike (AOP-38)

A lightning discharge which interacts with the materiel which becomes part of the discharge channel.

Stroke (AAP-55)

A component discharge of a lightning flash, which follows a *leader*.

Test Sequence (AOP-38)

A series of pulses radiated or injected by bulk current injection or applied by voltage probes for a given configuration (electrical and geometrical) of the munition or the weapon system or the equipment.

Test Transient Level [TTL]

Is the level of current at an equipment which has been measured during platform injection tests and where necessary scaled to the full threat environment.

Thermal Spark (AAP-55)

Incandescent material produced when a very high current is forced to cross a joint between two conducting materials, which have imperfect mating between their surfaces. (See **Annex E Clause 4.2** for further explanation).

Transfer Function (AAP-55)

At a given frequency the transfer function between two points in an electrical system is defined as the ratio of the amplitude of the signals at those points, together with the phase difference between them. The complete transfer function, over the range of frequencies considered, consists of plots against frequency of the amplitude ratio and phase angle between the two points of interest.

Transient Control Level [TCL]

The worse case actual amplitude that a Transient Assessment establishes should exist at an equipment when it is installed in the materiel and subjected to the maximum lightning threat. It is the transient amplitude arrived at by:

1. Taking the worst case of all configurations and attachment points from either modelling or pulse tests, when the difference between all of the relevant CTLs and TTLs is <6 dB, or
2. When modelling is not done it is the TTL, corrected if necessary for any non linearity.

Voltage Spark (AAP-55)

Any small electrical discharge which occurs when the voltage difference between two conductors rises to a value high enough to break down the intervening medium, whether this is air or other dielectric.

Weapon Class A

A munition carried on an aircraft and its associated systems, but not the aircraft.

Weapon Class B

A ground launched munition (whilst on the launcher) and its launcher and control complex.

Weapon Class C

A ship launched munition (whilst on the launcher) and its ship borne launcher, but not the ship on which the launcher is mounted.

Weapon Class D1

A surface launched wire guided missile to target and its launching system.

Weapon Class D2

An air launched wire guided missile to target and its associated systems, but not the aircraft.

Weapon Class E

Munitions not certified against a direct attachment but which must survive a Nearby Strike. Examples of Weapon Class E are shoulder launched missiles, shells and small ordnance.

Whole System Tests

Energetic Material Hazard Assessment Tests made on a complete weapon with propellant and explosives, together with detonators and fuzes, in situ to preserve sparking and electrical characteristics.

CATEGORY 508 LEAFLET 1

GUIDANCE FOR TESTING THE ELECTROMAGNETIC VULNERABILITY OF ORDNANCE AND WEAPON SYSTEMS

1 AIM 508/1-2

2 APPLICABILITY 508/1-2

3 BACKGROUND 508/1-2

4 OBJECTIVES 508/1-3

5 MANAGEMENT and PLANNING PROCEDURES 508/1-3

5.1 Electromagnetic Environment Background 508/1-3
5.2 Assessment Approach 508/1-3

6 PRELIMINARY ANALYSIS 508/1-3

7 TESTING 508/1-4

7.1 Test Configuration 508/1-4
7.2 Test Conditions 508/1-5
7.3 Information Required 508/1-6

8 ASSESSMENT OF MISSION IMPACT 508/1-8

8.1 Test Report 508/1-8
8.2 Test Result Categories 508/1-8
8.3 Assessment of Results 508/1-9

9 APPLICABLE DOCUMENTS 508/1-9

9.1 Referenced 508/1-9

10 ACRONYMS 508/1-9

TABLES

Table 508/1-1 Approach to Determine Potential Electromagnetic Energy Effects 508/1-4

Table 508/1–2 Data Dependencies (variable) 508/1-8

CATEGORY 508-LEAFLET 1

Guidance for Testing the Electromagnetic Vulnerability of Ordnance and Weapon Systems

1 AIM

The aim of this leaflet is to provide guidance and specific requirements for electromagnetic vulnerability (EMV) testing of ordnance, its equipment, and subsystems, which are to be immune to detrimental effects of electromagnetic energy as detailed in Leaflets 508/2, 508/3, 508/4 and 508/5.

General Purpose:

a. To state overall test objectives for validation of materiel design within the electromagnetic environment.

b. To provide guidance for test program management of electrical/electromagnetic environments and test selection.

c. To outline necessary processes and products of the test program, including test procedures, data collection, and assessment to achieve acceptable assurance

Specific Purpose:

To provide applicability for detailed test requirements including rationale for requirements, guidance in applying the requirements, and lessons learned from platform and laboratory experience. It should also aid procuring activities in tailoring emission and susceptibility requirements as necessary for particular applications, as well as help users develop detailed test procedures in the Electromagnetic Interference Test Procedure (EMITP) based on general test procedures in this document. Background information is provided for guidance purposes and, as such, should not be interpreted as providing contractual requirements.

2 APPLICABILITY

This document includes information on electronic systems or equipment that may be exposed to electromagnetic energy during its life cycle, specifically the following:

a. Weapon systems and associated subsystems

b. Ordnance

c. Support and checkout equipments for a and b

3 BACKGROUND

The AECTP 508 category contains generic assessment and test procedures applicable to any equipment type. Test procedures used for specific test programs shall be selected based on operational use and environmental conditions that will be experienced during the equipment's lifetime. Some test procedure selection will depend on procuring nation.

4 OBJECTIVES

Program objectives shall be to demonstrate, where appropriate, that ordnance or weapon systems, (hereinafter referred to as equipment):

d. Will not be unacceptably perturbed or damaged during their operational life cycle by external electromagnetic environments generated by other equipment that produces high levels of electromagnetic energy, such as radar, radios, and other transmitters.

e. Will not unacceptably endanger personnel or other nearby materiel during those phases of equipment life cycle if affected by external environments with adverse consequences.

5 MANAGEMENT and PLANNING PROCEDURES

5.1 Electromagnetic Environment Background

The Electromagnetic Environment (EME) which military weapons systems and ordnance must operate and survive is extremely complex. To assure that a system is not affected by its intended EME, it is imperative that the EME be considered during all life cycle phases and all modes of operation. This leaflet does not describe exact electromagnetic environments that systems will encounter; therefore, the approach is to define a representative maximum EME that the system may be subjected, that is, the maximum EME encountered in each phase of a system's life cycle. It may be necessary to predict the electromagnetic energy that could intentionally or unintentionally perturb electronics and couple this with the representative maximum environment to yield a description of the total potential threat. System usage projections to different platforms may also be necessary. Only after full awareness of the tactical EME can development of detailed system specifications be addressed, including the operational EME description. The EME specified in AECTP 258 Ref [1] or as tailored to the operational environment will be the basis for the test environment.

Electromagnetic energy can penetrate electrical or electronic equipment and systems through various points-of-entry (POE) and couple to critical components. Component response can cause circuit upset, circuit damage and mission failure. Energy couples first to the exterior of outer enclosures and sets up skin currents and charge densities. These currents and charges excite penetrations such as antennas (real or virtual) and apertures, or could actually be coupled in-band through antennas. Thus, unwanted energy penetrates the system where it can be processed as an in-band, valid signal or coupled to cables connected to sensitive, critical components.

5.2 Assessment Approach

The approach for assessing equipment EME hardness, using the established EME, should include preliminary analysis and testing. Test results establish whether materiel will successfully function in the operational EME with no adverse impact upon its mission, other materiel, or personnel.

6 PRELIMINARY ANALYSIS

Preliminary analysis should include computer modelling and a review of equipment and system level Electromagnetic Interference (EMI) testing, conducted as outlined in AECTP 501 Ref [2].

Computer modelling conducted with various commercially available software programs (such as Finite Difference, Finite Element, Method of Moments, etc.) assess the exterior electromagnetic environments impact upon electrical/electronic materiel. Specific software programs discussions are not included in this document.

Equipment level EMI test reviews can include comparing the NRS02 test field levels and susceptibility results to specified operational EME field levels. Operational field levels should be reduced by anticipated shielding, filtering, and free space loss not accounted for by the equipment level EMI testing

and may include a 3 dB margin to account for measurement errors (i.e. reduce total anticipated shielding by 3 dB).

Preliminary analysis may identify sensitive areas that EMV test planning should address. Sensitive areas that materials respond to can include specific frequencies or frequency bands, modulation parameters of pulse width or repetition rate, field power levels, varying amplitudes and material response time, and aspect angle between materiel and microwave energy source. **Table 508/1-1** identifies parameters to consider in the development of an EMV Test Plan.

A LAB MEASUREMENTS	B FREE SPACE MEASUREMENTS	C ANALYSIS & SIMULATION MEASUREMENTS
Determine system sensitivity 1. Modulation A. Pulse repetition frequency B. Pulse width C. Complex format (1) Pulse dropping (2) Amplitude (3) Swept, etc. 2. Relative RF Power 3. Dwell Time 4. Track Rate 5. Target intensity Determine coupling mechanisms 1. Entry ports 2. Circuits ports Evaluate results	Determine system sensitivity to: (standard response) 1. Frequency 2. Aspect angles* 3. Polarization (all of the above interdependent variables**) Determine system susceptibility(s) at parameters selected from laboratory and chamber measurements * Establish errors between electrical and mechanical bore sight ** Frequency may be a function of aspect angle, etc. Evaluate results	Determine system vulnerability 1. Measured data 2. Scenarios 3. Tactical Electromagnetic Environment Evaluate results

Table 508/1-1 Approach to Determine Potential Electromagnetic Energy Effects

7 TESTING

Final acceptance of developmental systems requires comprehensive testing and evaluation during the acquisition process. This section outlines test methods used to evaluate potential effects from electromagnetic energy. While many procedures described herein may not be used by contractors, but rather a military test facility, inclusion will make contractors aware of the thorough, detailed analysis needed for final acceptance.

7.1 Test Configuration

Test configuration should be the actual system configuration, or as close as possible to a radio frequency representation of the system, for the appropriate life cycle phase. As a minimum, the following configurations shall be considered:

a. The equipment by itself in an operating or active mode.

b. The equipment contained in any shipping or transit casing where the casing has been assessed for electromagnetic shielding against the environment, including any grounding provisions.

c. The equipment in a test mode and connected to other equipment or materiel. Test procedures shall consider potential safety hazards to test personnel. In particular, inadvertent initiation of energetic material by electro-ignition and other hazardous electrical/mechanical reactions induced by testing should not be possible.

7.2 Test Conditions

7.2.1 Climatic Conditions for Testing

7.2.1.1 Laboratory Tests

Laboratory tests should define the items listed in **Table 508/1-1**, column A. The testing will then normally proceed to the free space system testing; however, additional laboratory testing may be required before the total test program is completed.

7.2.1.2 Free Space Tests

Tests whose outcome depend on system geometry must be performed in a free-space environment, with EUT and any transmitter antenna separated to meet far field requirements established by equ 1. Considerations also include frequency, aspect angle, polarization, bore site, and power density. Laboratory data provides modulation and track rate inputs used and verified in these evaluations. Free space tests normally start with identification of a standard power response for data comparison. With a standard response established, aspect angle tests can be performed and the power response level versus aspect angle determined. If response tests are performed correctly, tracking tests can then be done at one aspect angle and the effects of electromagnetic energy on tracking predicted at any aspect angle. Furthermore, all responses observed during testing will identify points-of-entry and susceptibility thresholds. Thresholds will typically be determined within 3 dB of the lowest level of electromagnetic environment at which the system functions improperly.

$$R_d = \frac{(2 * L^2)}{\lambda} \qquad \text{Equ 1}$$

Where:

R_d = Far Field distance in metres

L = Maximum dimension of the antenna in metres

λ = Wavelength in metres

7.2.1.3 Analysis and Simulation

Free space measurements described in **Clause 7.2.1.2** require laboratory inputs to establish equipment test parameters, settings and modes of operation. Vulnerability analysis requires the combined inputs of laboratory and free space tests. Free space test information along with the information required for vulnerability analysis is shown in columns B and C of **Table 508/1-I**. Analyses and simulations are based primarily on the system's operational characteristics with:

a. Measured data on the electromagnetic energy response

b. Tactical scenario

c. The tactical electromagnetic environment

A system is termed vulnerable only if energy encountered during missions will cause susceptibility sufficient to cause failure as described in **Clause 8.2**. Otherwise, the system is not vulnerable, although it may respond adversely to many combinations of electromagnetic energy. Mathematical

simulations are normally required as a portion of vulnerability analysis. These simulations are particularly important when a system responds to electromagnetic energy, but does not completely malfunction. Properly designed simulations can establish signal levels required to degrade system performance beyond a tolerable limit. They can also provide initial test inputs and rapid analysis capability for laboratory testing. Simulation results available during a test program should reduce total test time and cost.

7.2.1.4 Platform Measurement or Tests

Systems that require a platform interface for target acquisition shall include interface vulnerability test and analysis.

7.2.1.5 Field / Flight Tests

Operational testing may include field or flight-testing. Such tests validate laboratory and free space test results and computer simulations. Field-testing falls into two categories:

a. Captive flights

b. Live firings

Technology development to reduce or eliminate these expensive tests is an ongoing priority.

7.2.2 Electrical / Electromagnetic Test Conditions

The best method to reduce electronic system electromagnetic vulnerability is to prevent inadvertent entry of electromagnetic energy. There is rarely an effective substitute for robust electromagnetic-resistant design. This should be considered throughout the design and redesign phases. Susceptibility reduction techniques should be considered early in the design stage, in each subsystem, so entire system hardness does not require disproportionate efforts in only one area. The main emphasis is to:

a. Keep unwanted energy away from circuitry

b. Keep undesired signals that can couple to wires away from intended signal paths, and particularly away from semiconductor devices

c. Design circuitry such that undesired energy in the signal path does not severely disrupt circuit operation

Key areas in hardening are circuits and circuit board design, shielding, bonding, filtering and grounding.

Information on these areas can be found in STANAG 4238 [Ref 3].

7.3 Information Required

Complete system performance evaluation in an electromagnetic environment requires testing for dependency on and response to many factors. The major outputs derived from testing will be those discussed in **Clauses 7.3.1.1** through to **7.3.1.10**. External electromagnetic environments can couple into systems through ports of entry caused by surface discontinuities and into electronics through circuit ports.

7.3.1 Pre Test Information

7.3.1.1 Power Density

Power density is a primary factor influencing electronic behaviour. Given enough power, interference can be experienced on any piece of electronics. Therefore, the requirement is not to determine how much brute force power is necessary to affect a system, but, within realistic limits, the power required to cause an effect, and whether the system is more susceptible to peak or average power.

7.3.1.2 Frequency

Determine the effects that both known and anticipated emitters will have on a system must be determined. Every effort must be made to evaluate the system at the exact frequencies it will or can encounter.

7.3.1.3 Modulation

As with frequency, there can be several aspects to addressing modulation. When simulating a known threat, it is important to duplicate, as nearly as possible, all characteristics of that threat, including modulation. It is also necessary to look at the electronics and determine the modulations that, if induced into the system, would be processed as valid signals or would disrupt processing of valid signals. A system can normally be separated into all relatively independent units. For example, modulation affecting one system function may not affect another, so each should be investigated independently. Modulation may have different formats, including those that can give the system false information and those that might upset or blind a system. Among items to consider are pulse repetition frequency, pulse width, and complex format (that is, pulse dropping, amplitude, swept, etc).

7.3.1.4 Aspect Angle

Since the system and its electronics respond as antennas, coupling between external fields and those antennas will be a function of aspect angle. The maximum lobe, corresponding to the maximum gain of the antenna is related to the effective aperture and wavelength, and is greatly influenced or altered by its surroundings. When testing, monitor the entire system and its response versus aspect angle for selected system points.

7.3.1.5 Polarization

Antennas, by design, respond better to some polarizations than others. Therefore, it is important to consider system and expected operating environment polarization for a comprehensive susceptibility evaluation.

7.3.1.6 Bore Sight (for Missile Systems)

Electrical (with respect to RF) and mechanical (with respect to seeker angle) bore sight misalignment can lead to erroneous laboratory, free-space, and field/flight test results. Verify bore sight alignment prior to testing.

7.3.1.7 Track Rate (for Missile Systems)

Track rate is the angular rate of change of a missile seeker as a function of time. The effects of various track rates in terms of degree/second on system performance should be investigated.

7.3.1.8 Target Intensity (for Missile Systems)

Target in-band power, like RF power, is an important consideration in successfully completing certain missions and therefore must be determined.

7.3.1.9 Dwell Time

Emissions causing interference may have time varying amplitudes, such as scanning or rotating antenna emissions. Energy directed at the system under test for a short duration may produce negligible interference. Dwell time measures the minimum duration required to cause a specified degree of interference.

7.3.1.10 Data Dependency

Data dependency is established for a given power level and circuit coupling port. **Table 508/1-2** shows the dependency of test parameters in **Clauses 7.3.1.1** through to **7.3.1.9**.

Data Function Dependant on each other	Independent Data Functions
Frequency Aspect Angle Polarization Bore Sight Power Density	Modulation Track Rate Target Intensity Dwell Time

Table 508/1–2 Data Dependencies (variable)

It should be noted that all dependent functions are related to system geometry. If a system acts as an antenna, all functions in the left column are dependent on the geometry of that system. However, modulation, track rate, target intensity, and dwell time are functions of one portion of the system only (that is, a circuit port). For tests to determine effects from any of the dependent items, the entire system must be present and must be tested in a free space environment. This is not the case for the independent data functions.

8 ASSESSMENT OF MISSION IMPACT

8.1 Test Report

Test reports document and capture test configuration, conditions, operational procedures, parameters, pictures of test setup, summary of data taken including thresholds of susceptibility, and observed results. The test report shall include conclusions and recommendations, with test results in a brief narrative form, a discussion of any remedial actions initiated, and proposed corrective measures required (if necessary) to assure compliance of the equipment or subsystems.

8.2 Test Result Categories

Test results presented in test reports can be grouped into the following categories.

8.2.1 Temporary Degradation

A device may suffer some degree of physical or electrical functional degradation during active exposure to electromagnetic energy, but the device can return to full function after exposure ceases.

8.2.2 Permanent Degradation

A device may suffer some degree of physical or electrical damage as a result of exposure to electromagnetic energy, but the device can still function. Degradation may reduce system capability after removal of the electromagnetic energy.

8.2.3 Catastrophic Failure

A device may suffer physical damage or electrical damage or both that renders it non-functional. Three distinct failure modes observed in solid-state transistors and integrated circuits are:

a. Bondwire Melt – Bondwire melt occurs when currents generated achieve a sufficiently high density to melt bond wires connecting internal semi-conductor devices to external circuitry, resulting in an open electrical circuit.

b. Metallization Damage – Metallization damage occurs when current densities on chip surfaces are high enough to melt some portion of the metal conduction path.

c. Junction Damage – Junction damage occurs when the device is driven into the second breakdown region by a signal and remains there sufficiently long to produce a permanent shorting channel.

8.3 Assessment of Results

The effects of electromagnetic energy on equipment will be bounded by the parameters listed in **Table 508/1-1**. A determination of the probability of those parameters impacting deployed, operational equipment will direct mission impact assessment. Mission impact should consider the expected operational parameters during equipment usage phases and various modes of operation. During different stages of equipment use, the electromagnetic environment may differ, as well as its operational modes. Testing results should also correlate equipment operational modes to application of different electromagnetic environments. For example, equipment may be transported and handled in a more benign environment than when launched from an aircraft or ship. In addition, during flight, equipment may have a tracking and arming phase that occur during exposure to the different electromagnetic environments with different parameters. It may be beneficial to have a pictorial timeline of the operational equipment modes that compare various electromagnetic environments that different sources provide along that timeline.

Conclusions should be stated as to the anticipated success of the materiel to perform in its intended operational electromagnetic environment. Any equipment response to the test EME should be considered susceptibilities, and any responses affecting mission success should be considered vulnerabilities. Known and recommended design or operational usage changes to improve the equipments mission success should be provided.

9 APPLICABLE DOCUMENTS

9.1 Referenced

Ref 1 AECTP 250 Leaflet 258 Radio Frequency Electromagnetic Environments

Ref 2 AECTP 500 Category 501 Electrical/Electromagnetic Environmental Tests Equipment and Sub-System Tests

Ref 3 STANAG 4238 Munitions Design Principles Electric/Electromagnetic Environments

10 ACRONYMS

EME Electromagnetic Environment

EMI Electromagnetic Interference

EMITP Electromagnetic Interference Test Procedure

EMV Electromagnetic Vulnerability

EUT Equipment Under Test

POE Point of Entry

RF Radio Frequency

CATEGORY 508: LEAFLET 2

ELECTROSTATIC DISCHARGE, MUNITIONS TEST PROCEDURES

1 AIM 508/2-2

2 APPLICABILITY 508/2-2

3 BACKGROUND 508/2-2

4 CHOICE OF TEST PROCEDURE 508/2-3

4.1 The Contact Discharge Test Method 508/2-3
4.2 The Air Discharge Test Method 508/2-3

5 CIRCUIT PARAMETERS REPRESENTING THE ESD THREAT 508/2-3

6 GENERAL REQUIREMENTS 508/2-3

7 TEST PLAN 508/2-5

8 TEST EQUIPMENT 508/2-6

9 TEST PROCEDURE 508/2-9

10 REPORTING REQUIREMENTS 508/2-9

11 APPLICABLE DOCUMENTS 508/2-10

11.1 Referenced 508/2-10
11.2 Information Only 508/2-10

12 ACRONYMS 508/2-10

ANNEX A GUIDANCE ON CONDUCTION ESD ASSESSMENT AND TEST……..……..508/2-A1

FIGURES

Figure 508/2 – 1 Functional Electrical Schematic for Personnel Generated ESD Test 508/2-7
Figure 508/2 – 2 Functional Electrical Schematic for Helicopter Generated ESD Test 508/2-8
Figure 508/2 – 3 Discharge Electrode of the Personnel ESD Generator 508/2-8
Figure 508/2 – A1 ESD Standard Load Design 508/2-A7
Figure 508/2 – A2 ESD Standard Load Electrical Model 508/2-A8
Figure 508/2 – A3 Personnel-borne ESD Waveform Calibration Circuit 508/2-A8
Figure 508/2 – A4 Typical ESD Waveform 508/2-A9
Figure 508/2 – A5 Typical ESD Waveform from Test 508/2-A9

TABLES

Table 508/2 – A1 Number of Tests without Failure Required to demonstrate Reliability at Various Confidence Levels 508/2-A6

Table 508/2 – A2 Example Test Sequence 508/2-A6

CATEGORY 508-LEAFLET 2

Electrostatic Discharge, Munitions Test Procedures

1 AIM

The aim of this leaflet is to define the test procedures to be used in determining the safety and suitability for service of munitions containing electrically initiated devices (EIDs) and associated electrical/electronic systems/subsystems that are exposed to the electrostatic environmental conditions specified in AECTP253 Ref [1] for NATO forces. Guidance on electrostatic discharge (ESD) hazard assessment and testing is provided in **Annex A**.

2 APPLICABILITY

This leaflet applies to all munitions throughout their specified life cycle that:

d. Will be exposed to the personnel-borne electrostatic environment arising from personnel handling procedures and processes;

e. Will be exposed to the helicopter-borne electrostatic environment arising from vertical replenishment procedures;

f. May be affected by the above electrostatic environments.

3 BACKGROUND

3.1 There are many sources of electrostatic charge involved in the handling and deployment of munitions. Ref [1] defines the environments associated with the threat presented by personnel handling of munitions and associated hardware, and the threat by external transport or deployment on helicopters.

3.2 This leaflet addresses testing using only the configuration(s) of munitions containing EIDs and associated electrical/electronic systems likely to encounter the threat(s). Assessment of the need for testing is covered in **Annex A**.

Note: ESD may also represent a direct threat to explosives/propellants in munitions (whether or not fitted with EIDs). ESD assessment/test for these munitions should also be carried out. Such assessment/tests are not covered by this edition of 508-2 and the only generally accepted test would require full threat testing on a live system or sub-system. STANAG 4490 Ref [4] provides advice and guidance on ESD testing of small scale explosive materials and charge scale propellants. These cannot be directly related to personnel or helicopter ESD threats.

3.3 During these tests the munitions should be in a passive state. Any associated electrical/electronic subsystem may be in either a passive or active state, depending upon the result of the assessment discussed in **Annex A**.

3.4 The ESD levels of concern in this leaflet are those that may be generated by:

a. Personnel during preparation, handling, maintenance, transportation, and deployment of the munition and associated electrical/electronic systems; or

b. External transport or deployment of a munition containing Electro Initiated Devices (EID) and associated electrical/electronic systems by a helicopter.

4 CHOICE OF TEST PROCEDURE

Use one or both of the two general test methods to determine the immunity of the munition or associated system to the ESD environments. These test methods are Contact Discharge and Air Discharge. Use of a particular test method is the developing nation's decision. Both test methods require testing at multiple test points and may require testing at multiple voltages. These procedures are applicable for both personnel-generated and helicopter-generated ESD.

4.1 The Contact Discharge Test Method

This test method uses the test generator' discharge electrode placed in contact with the munition or associated system, and applies the charge with a discharge switch within the generator. If the conducting substrate is painted, the test should normally be carried out with the surface in the condition in which it is expected to be during service when exposed to the ESD threat and, depending on the insulator, either contact and/or air discharge methods may be appropriate.

4.2 The Air Discharge Test Method

This test method generally moves the test generator's discharge electrode toward the munition or associated system until an air discharge occurs when the breakdown potential of the gap is exceeded. This is generally considered to be the only relevant method for the helicopter discharge test. A salient may be used to direct the discharge to a particular point if required. On occasions, the threat analysis may justify using a fixed gap.

5 CIRCUIT PARAMETERS REPRESENTING THE ESD THREAT

Figures 508/2-1 and **508/2-2** provide representations of the ESD test system configurations for use in conducting the tests proposed in this leaflet. **Figure 508/2-1** represents the test circuit configuration to be used to represent the threat associated with personnel handling. **Figure 508/2-2** represents the test circuit configuration to be used to represent the threat associated with external helicopter transport or deployment. The circuit parameters to be used in testing to represent the threat associated with personnel handling or external helicopter transport or deployment are defined in Ref [1].

6 GENERAL REQUIREMENTS

6.1 Conduct an assessment of the ESD susceptibility of the munition and/or associated systems. Guidelines on conducting this assessment are given in **Annex A**. If analysis shows conclusively that the munition containing EIDs and associated electrical/electronic systems is not susceptible to the ESD threat, or that the threat is not likely to be encountered in a particular configuration, the requirement for testing may be waived upon approval of the recognized National Safety Approving Authority (NSAA).

NOTE: Where EIDs and electronic sub-assemblies have been tested to (and met) the full threat level outside the munition it may not be necessary to conduct a test on the All-Up-Round (AUR). This is particularly relevant to the personnel level threat. The assessment should document the tests that have been completed and what further AUR tests may or may not be required.

6.2 Base the selection of the location of the test points for discharge testing on those points assessed to be potentially susceptible to either direct penetration or excitation of the structure, and subsequent internal transfer of the energy. A discussion on techniques that may be used in the selection of discharge locations is given in **Annex A**.

6.3 These tests are intended only to evaluate the response of the system's EIDs and associated electrical/electronic systems to the threat of an ESD event. Use fully assembled items selected for testing with live EIDs (or instrumented devices where approved by the national authority) and functional electronic subsystems, but remove other explosive materials and replace them with inert materials that are electrically representative[1] of the explosive materials.

6.4 Determine the packaged/unpackaged/powered state of the munition or associated system to be used for testing from an analysis of the life cycle (logistics and deployment) of the munition containing EIDs and associated electrical/electronic systems. The most susceptible state relevant for each of the personnel and helicopter tests should be chosen. It may be necessary to test a weapon system in more than one state.. Use any protective caps or covers over connectors and/or shorting/grounding devices during testing if they would be in place during the part of logistics cycle simulated by the particular test.

6.5 Conduct testing at a temperature of 23 ± 10°C and a relative humidity of less than 60 %. Condition the munition and its associated systems, along with relevant parts of the test hardware, to the temperature and relative humidity specified above for a minimum of 24 hours before testing. **Annex A** provides a discussion on the effects of moisture in the air and on (or inside) the surface of the munition and associated systems when conducting electrostatic discharge testing.

6.6 At each test point apply multiple discharges at both positive and negative polarities using different voltages. **Annex A Clause 4.6** suggests a typical set of discharges for a single test point. Unless instrumented EIDs are used, it will be necessary to conduct multiple test sequences to ensure statistical validity to the results. **Annex A** provides a discussion on the confidence level and reliability of test data versus the number of test sequences conducted without a failure. For the purposes of this leaflet, a test sequence is defined as a series of discharges to the test item at all the locations identified as potentially susceptible in the pre-test assessment. Conduct subsequent sequences by using different items/equipments or on the same item/equipment with a different set of EIDs, and electrical/electronic subsystems that have been confirmed to be functional. Since safety margins can be determined by using instrumented devices (for comparing measured levels to no-fire thresholds), it may not necessary to conduct multiple test sequences in these circumstances. However, the possibility of latent damage to the bridge will need to be assessed for particularly sensitive EIDs (e.g. film bridge). The agreement of the NSAA shall be obtained when instrumented devices are to be used.

NOTE: that where tests are to be done on a "bare" EID (e.g. to meet the characterisation requirements of STANAG 4560) the discharges shall be applied both between the pins and between the pins (connected together) and the case.

6.7 Where instrument devices are used (i.e. inert EIDs with sensors to measure pick-up) it may be necessary to undertake a test sequence with pin to case as well as pin to pin instrumentation - especially for helicopter ESD tests.. The full agreement of the NSAA shall be obtained before any instrumented tests are carried out and on the type of instrumentation to be used.

6.8 For ESD tests instrumentation must be calibrated using a very short pulse length signal to ensure the calibration is applicable for ESD pulses. (The normal current / power calibration curve used for HERO tests is not suitable due to the time response of the instrumentation) Pin to case instrumentation is not well developed in many Nations but the principle is to measure the voltage developed between the EID pins and the case. This can then be compared to the breakdown threshold which can be determined by experiment or some Nations use a generic worst case value of 500 V or 1 kV.

---

[1] Electrically representative here means the material should possess the same electrical properties as the explosive material it replaces at voltages which it may experience during an ESD event. It is acknowledged that a proper understanding of these properties may be difficult to obtain.

7 TEST PLAN

Prepare a test plan for each munition and associated system on which tests are conducted, including but not limited it to, the following:

a. The purpose of the test and a test schedule;

b. A description of the munition containing EIDs and associated electrical/electronic systems with identification of the configuration(s) to be tested;

c. The number of munitions and associated equipment to be used in the testing;

d. The number of times each munition and associated equipment may be tested and the testing and/or replacing that should occur between each test;

e. The temperature and relative humidity limits required for each test (see **Clause 6.5** above);

f. The criteria for malfunction of the munition and associated equipment such as initiation of an EID or a degradation or loss of function. If a degradation of function or temporary loss of function is acceptable, a threshold level for a particular malfunction shall then be determined and reported;

g. A description of the munitions and associated equipment's functional (baseline) test to be used before, during, and after the ESD test.

h. The location of test points on the munition and associated equipment and the test method used (contact discharge or type of air discharge). When a salient (an electrode mounted to the test item to direct the impact of the air discharge to a specific location) is used, its composition, physical dimensions location and purpose should be specified;

i. A description of the test facility and the ESD generation equipment to be used, and the ESD generator calibration procedure;

j. The type of data to be recorded (both written and photographic), and how the data are to be recorded during the test;

k. A description of the instrumentation used to monitor the munition and associated equipment and the discharge;

l. The pre-test ESD susceptibility assessment, including all conclusions;

m. A separate test procedure for each threat level tested (i.e., personnel-generated ESD threat and helicopter-generated threat), including;

   i. The type, number and parameters of discharges for each test point and munition.
   NOTE: The total number of discharges per test point should normally not exceed 20. See **Annex A Clause 4.6** for a discussion on number of tests.

   ii. Where relevant the types of tests to be done (e.g. to EID or electronic components) between discharges and after the test.

   iii. The procedure to be followed after each test sequence if changing EIDs or other components is necessary.

n. A summary of results of any ESD tests conducted on the munition EIDs and/or electrical/electronic subsystems during qualification testing.

8 TEST EQUIPMENT

The functional electrical schematics for the test configurations are shown in **Figures 508/2-1** and **508/2-2**. **Figure 508/2-1** is representative of an ESD event discharging to a grounded item; typical of a personnel generated ESD event during handling or operation. **Figure 508/2-2** is representative of a charged item discharging to ground; typical of a helicopter-generated ESD event due to helicopter transport or deployment on a helicopter.

Verify the energy delivery capability (stored energy and output impedance) of the ESD generator, and record them prior to and after testing is conducted. A touching electrode should normally be used for calibration tests and it should be considered as part of the discharge circuit.

a. Ensure the energy delivered to the calibration test loads for personnel-generated ESD is in the correct ratio of load to source impedance (±10%) with respect to the energy stored on the storage capacitor.

b. Ensure the energy delivered to the calibration test load for helicopter-generated ESD is between 80 % and 100% of the energy stored on the storage capacitor for applications requiring the less than 1 Ω series resistor.

Commercial ESD simulators with the ability to create the ESD environments defined in Ref [1] may be used to create the specified ESD environments, or, if such a simulator is not available, the following equipment may be used:

c. A power supply with both positive and negative test voltages with respect to ground. A switch that prevents the power supply providing additional charge during the discharge of the storage capacitor. This may be achieved by either isolating the power supply from the storage capacitor or by connecting both the power supply and the storage capacitor to the reference ground.

d. A storage capacitor chosen to minimize inductance and leakage.

e. A non-inductive series resistance with as low a capacitance (in parallel) as possible. For the helicopter-generated ESD test, the maximum 1Ω series resistance represents the total allowable discharge circuit resistance, excluding the munition and associated equipment.

f. A discharge switch that has sufficient voltage capability and allows for the rise time required. If a relay is used, one with a single contact (to avoid double discharges in the rising part) should be chosen, and placed as close as possible to the tip of the discharge electrode. For higher voltages, a relay in a special gas atmosphere may be necessary. For the air discharge test method, the unnecessary discharge switch shall be closed.

g. e. A metal discharge electrode that has a size and shape that minimizes corona. For the air discharge test method for Personnel ESD, a discharge electrode with a size and shape as shown in **Figure 508/2-3** shall be used. A smooth, clean and shiny electrode surface shall be maintained to ensure high electrical conductivity and uniformity of discharge.

h. An electrostatic voltmeter (or equivalent) with an impedance with such a value that it will not load the capacitance. It is recommended that the input impedance of the electrostatic voltmeter be greater than one Tera Ω (10^{12} Ω).

i. A metallic (copper or aluminium) ground reference plane with a thickness of 0.25 millimetre (mm) minimum. Other metallic materials can be used if they have a minimum thickness of 0.65 mm. The minimum size of the ground reference plane should be 1 metre squared (m^2); the exact size depends upon the dimensions of the munition and associated equipment. The reference ground plane shall project beyond the munition and associated equipment or coupling plane by a least 0.5 metre (m) on all sides. The reference ground plane shall be connected to the protective grounding system. In the case of large systems, the munition and associated equipment shall be placed close to the ground plane at about 0.1 m distance.

j. Test parameters (voltage, capacitance, resistance, discharge circuit inductance, and calibration test load) for each test procedure, including the inductance of the capacitor and wiring to the discharge probes shall be in accordance with the values in specified Ref [1]. If the inductance is being measure it shall be done at a nominal 1 kHz frequency.

Calibrate the test equipment immediately prior to testing and after the completion of testing. **Annex A** discusses suitable procedures for such calibration. As a minimum, record the voltage output waveform for the personnel threat simulation hardware across a standard test load, and include it in the test report. The standard test load is discussed in **Annex A**. Use a load that is of a coaxial configuration and that is designed and constructed so as to have a linear response over the frequency range of Direct Current (DC)-to-100 MHz.

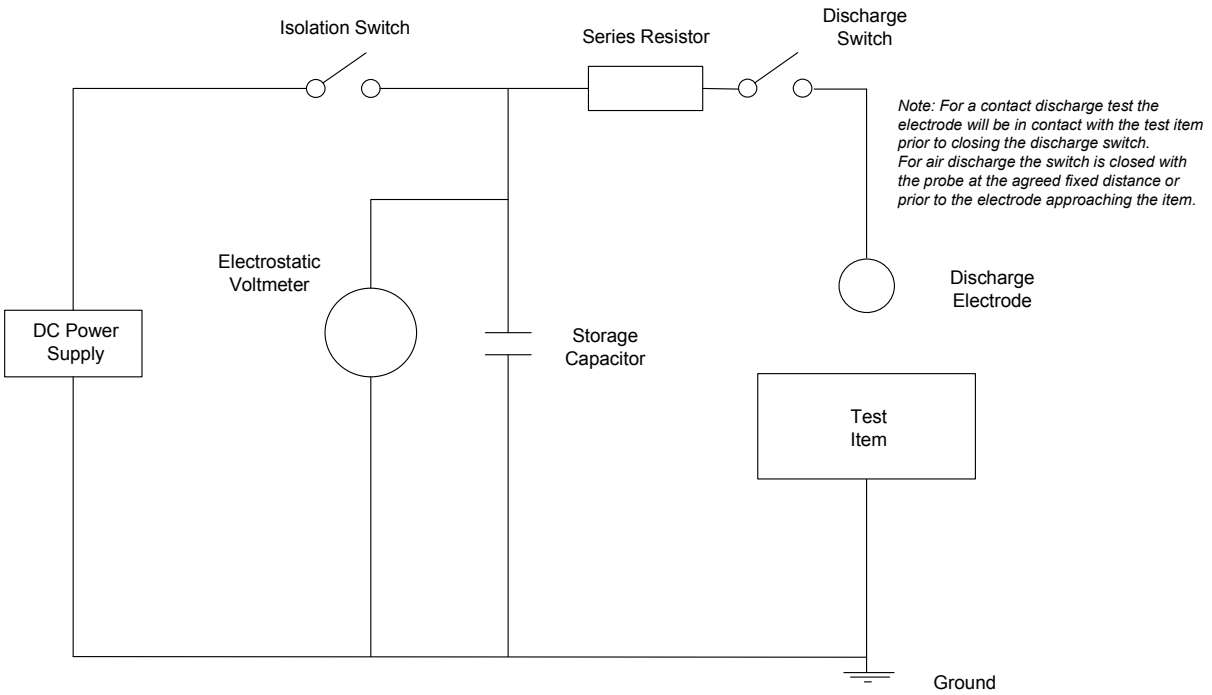

Figure 508/2 – 1 Functional Electrical Schematic for Personnel Generated ESD Test

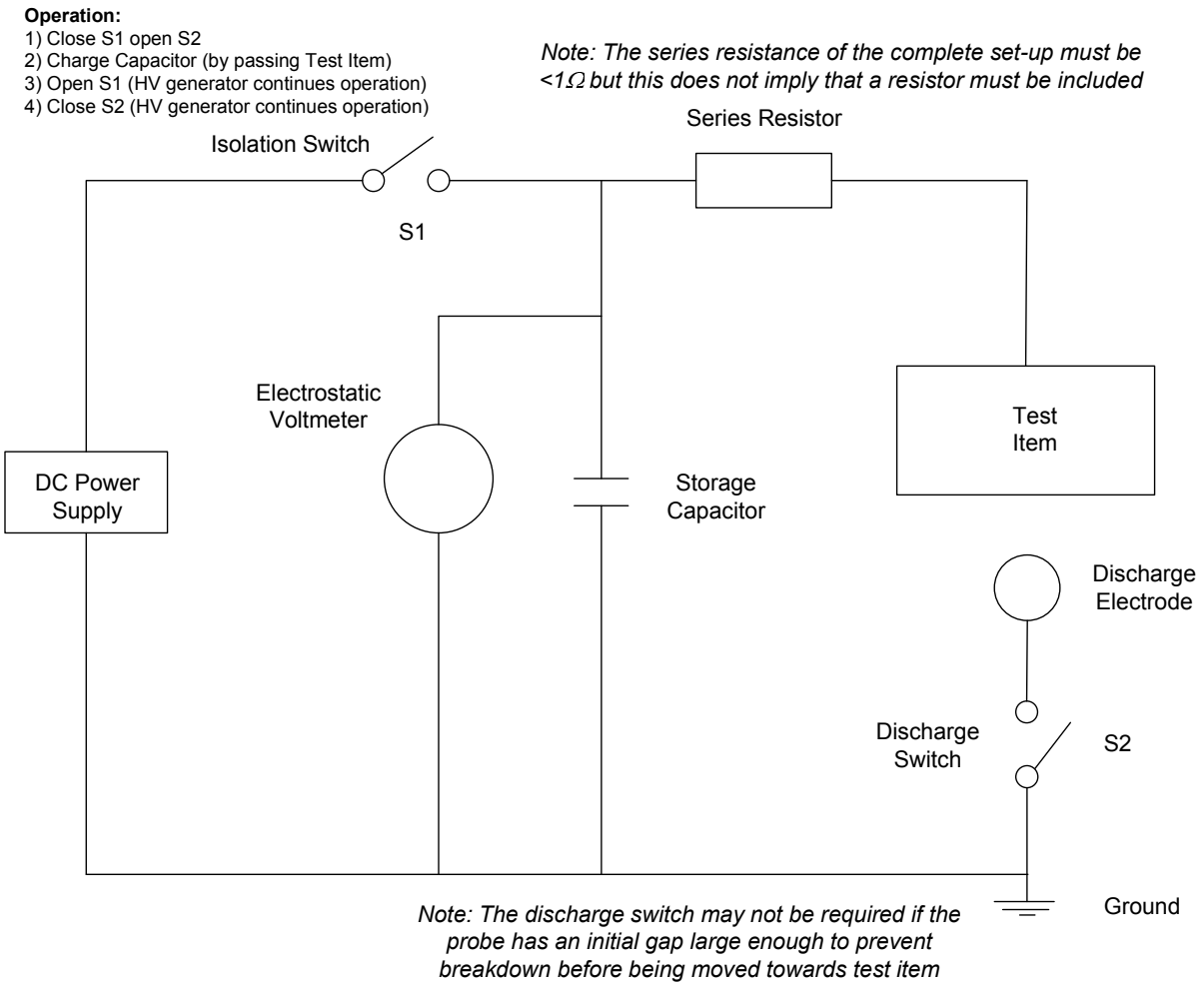

Figure 508/2 – 2 Functional Electrical Schematic for Helicopter Generated ESD Test

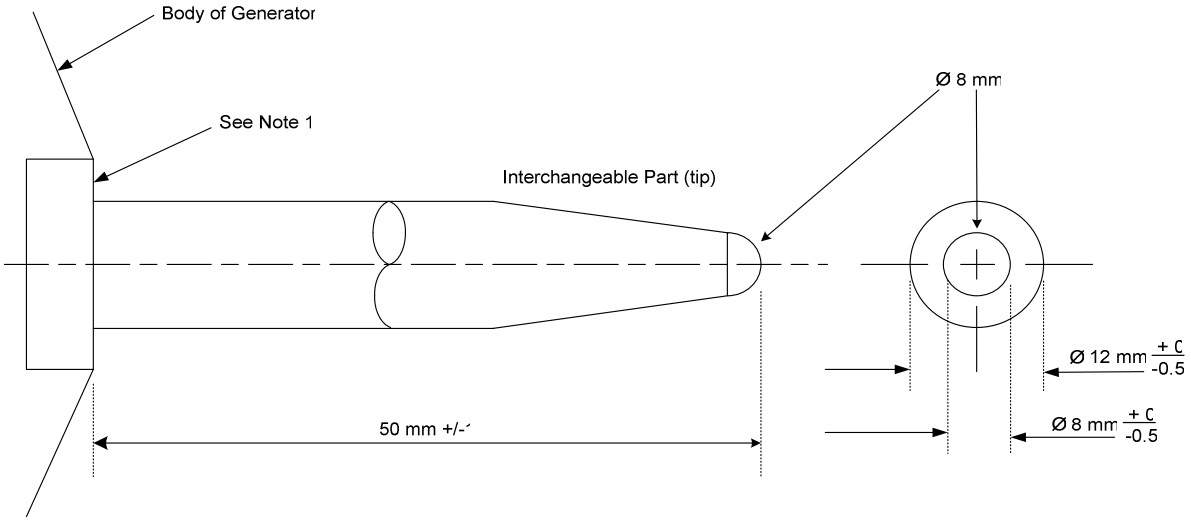

NOTE - The Discharge Switch (e.g. Vacuum Relay) shall be mounted as close as possible to the Tip of the Discharge Electrode

Figure 508/2 – 3 Discharge Electrode of the Personnel ESD Generator

9 TEST PROCEDURE

The following provides a general outline of the procedures to be used in the ESD testing of AUR munitions containing EIDs and any associated electrical/electronic systems. The personnel conducting the testing must develop a test procedure detailing the exact steps to be taken for use.

9.1 Munition systems testing have shown some instances where an item may pass a high voltage test and fail at a lower voltage. Therefore, consider these intermediate voltages during assessments and tests to identify voltage breakdown paths that may not be observed at the voltage levels given in Ref [1], and that may have an adverse effect on the materiel.

a. Use intermediate voltages or personnel-generated ESD that are in 5 kV increments from 5 kV to 25 kV for both positive and negative polarities.

b. Use intermediate voltages for helicopter-generated ESD that are in 50 kV increments from 50 kV to 300 kV for both positive and negative polarities.

9.2 Perform both the personnel-generated ESD and the helicopter-generated ESD tests in accordance with the approved test plan. Ensure test details (configurations, order of trials, etc.) are agreed with the NSAA and document them in the test plan. Use the following test sequence for munitions and associated equipment:

a. If required by the test plan conduct functional tests of the electrical/electronic subsystems to be tested prior to and after the testing.

b. If required by the test plan record resistance measurements of each EID prior to and after each test sequence.

c. Conduct pre-conditioning of munition and/or associated system(s) under test to the temperature and relative humidity specified for the test.

d. Position the munition and/or associated system(s) to be tested in a manner such that the threat can be directed to the first designated test point.

e. Apply discharges to the first designated test point as detailed in the test plan.

f. f. If required by the test plan, record resistance measurements of each EID.

g. Reposition the munition and/or associated system(s) to allow the threat to be directed to the next designated test point, and repeat steps (e) through to (g) for each designated test points.

h. After the simulation hardware and test item set-ups have been determined to be “safe,” perform functional and/or safety testing as detailed in the test plan.

i. Repeat all the above steps for each munition test item or if using the same munition – the number of test sequences detailed in the test plan.

NOTE: As discussed in Clause 6.6 a new test sequence will generally be carried out on a munition which has the EIDs replaced.

10 REPORTING REQUIREMENTS

Provide a test report following the completion of the test, and include, but not limit it to, the following:

a. Any previous testing and results.

b. Any waivers to the test plan with rationale and justification.

c. Type of performance checks used before, during and after the ESD tests.

d. A complete description of the ESD simulation hardware with circuit parameters and dimensions of the probe used during testing.

e. A description of the ESD generation equipment calibration technique used.

f. Documentation of the calibration waveforms.

g. The results of testing conducted at each of the test points selected and if relevant for each temperature and relative humidity condition.

h. The results of operational and safety checks before (if required) and after tests (noting any significant changes).

i. If required by the test plan a record of the EIDs resistance(s) measured prior to and after each test series, and

j. Analysis, conclusions, and recommendations based on the pass/fail criteria and test results. (Some Nations may include the personnel and/or helicopter ESD discharge clearance certification in the conclusions).

When analysis of the susceptibility of the munition and/or associated electrical/electronic subsystems indicates conclusively that the system is not susceptible to the ESD threats specified in Ref [1], or that the threat is not likely to be encountered in a particular configuration, ESD testing may be waived by the NSAA. Provide the complete analysis in lieu of the test report.

11 APPLICABLE DOCUMENTS

11.1 Referenced

Ref 1	AECTP 250 Leaflet 253 Electrostatic Charging, Discharge and Precipitation Static
Ref 2	AECTP 500 Category 501 Electrical/Electromagnetic Environmental Tests Equipment and Sub-System Tests
Ref 3	IEC 61000-4-2 Testing and Measurement Techniques – Electrostatic Discharge Immunity Test
Ref 4	STANAG 4490 Explosives, Electrostatic Discharge Sensitivity Tests(s)

11.2 Information Only

STANAG 4560	Electro-Explosive Devices Assessment and Test Methods for Characterisation
AOP-43	Electro-Explosive Devices Assessment and Test Methods for Characterisation Guidelines for STANAG 4560
AAP-55	NATO E3 Terms and Definitions Glossary

12 ACRONYMS

DC	Direct Current
EID	Electro-Initiated Device
ESD	Electrostatic Discharge
NFT	No Fire Threshold
NSAA	National Safety Approving Authority

ANNEX A

GUIDANCE ON CONDUCTING ESD ASSESSMENTS AND TESTS

A.1 INTRODUCTION

This annex provides guidance on conducting an assessment of the ESD threat to a weapon system and on performing system verification testing. Assessment is based on the construction of a weapon system and the sensitivity of the weapon system and its sub-components to ESD.

Guidance is provided on determining the need for testing, appropriate test hardware configuration, and selection of discharge locations.

Techniques are proposed for use in system verification of ESD simulation hardware. The effect of moisture in the air and on (or just under) the surface of the test item is also considered.

ESD simulation techniques the use of a standard calibrated load, and the effect of probe geometries are also described along with the band width of the standard load and wave form analysis hardware.

Finally, techniques for assessing test data and the statistical significance of the number of tests conducted on each component is provided.

A.2 SCOPE

This annex addresses the assessment of ESD hazards associated with personnel-borne or helicopter-generated threats. Such an assessment may conclude that ESD testing is not required but will often show that testing to determine the sensitivity of the weapon system (or associated subsystem) to the personnel and/or helicopter ESD threat is necessary.

It is not within the scope of this leaflet/annex to address ESD threats associated with charges that may be generated on weapon system surfaces due to the charge separation associated with the movement of the weapon system (or associated subsystem) with respect to non-conductive pads and packaging in shipping containers or due to flight through the air and mist. If such threats are likely to be encountered, then a hazard assessment and possibly purpose designed tests will be needed.

A.3 HAZARD ASSESSMENT

A.3.1 General

An analysis of the weapon system and associated subsystem should be conducted to determine its potential susceptibility to an ESD event associated with the operations that may be experienced during the life-cycle of the weapon system. This analysis should address issues affecting both safety and suitability for service and should be approved by a recognized national authority. The analysis should concentrate on a review of the firing circuitry, the sensitivity of EIDs and/or electronic subsystems, and reviewing construction details. The review is to include wiring diagrams, materials, and the bonding of grounding systems with conductive bodies.

A.3.2 Required Data

The following data is required to assess the ESD susceptibility of the weapon system and/or associated subsystem.

a. The full designation as to type and design specification of the weapon system or ammunition to be assessed should be provided.

b. A drawing package consisting of, at minimum,

   i. Wiring Diagrams

   ii. Construction Details

   iii. The location and type of any EIDs and other explosives components that are part of the weapon system

   iv. The materials used in the weapon system body

v. The bonding between parts of the body and the size and placement of apertures. Where a helicopter ESD test of a packaged item is required the drawings of the weapon container shall also be available.

c. Specific details required on the EIDs used or proposed for use in the weapon system should include.

i. EID Designation

ii. Electrical Characteristics

Electrical characteristics required include bridge wire resistance (when applicable) and no-fire thresholds (NFT) for energy and power, current, or voltage levels. These threshold levels should be defined and derived as required by STANAG 4560 and AOP 43. An explanation of how these threshold levels were derived is also required. For ESD sensitivity the principal parameters of interest are the energy NFT and the bridge wire resistance

d. Details of all electrical/electronic subsystems both those associated with the initiation of EIDs and those whose failure would result in the weapon system being rendered not suitable for service should be provided.

A.3.3 Assessment Consideration

An ESD susceptibility analysis must begin with a review of the life cycle (logistic and deployment configurations) proposed for the weapon system. The review of the life cycle will provide information necessary to identify the ESD threat(s) likely to be encountered and the configuration of the weapon system (or subassemblies) likely to encounter the threat. All configurations of the weapon system and associated subsystems where the ESD threat may be sufficient to affect the safety or suitability for service should be addressed during the ESD assessment. For the helicopter threat this should include an assessment of the packaged/unpackaged state of the munition when exposed to the threat.

To assess the ESD sensitivity of a weapon system it is necessary to obtain construction details on the "configuration under consideration" and ESD sensitivity information on specific components e.g., associated EIDs, pyrotechnics, propellants, high explosives, critical electronic subsystems and other components. These construction details and diagrams must provide sufficient information to determine the shielding effectiveness of the enclosure, the size and construction of any apertures in the configuration (or shipping container where applicable), the bonding of conductive bodies and their interconnection with the electrical ground reference.

Review of the construction details and schematics will identify locations where bonding and shielding ensure that potentially sensitive components would not be affected. Also, those locations and configurations should be identified where an ESD threat exists to a component that is critical for safety or suitability for service. Any previous ESD sensitivity test data should be reviewed in determining whether testing may be necessary. Weapon systems and their associated subsystems which are not constructed with conductive surfaces must be analyzed to ensure that an ESD attachment will not result in structural damage.

The ESD threat associated with the charge which may be generated on a non-conductive weapon system enclosure or packaging is not within the scope of this document. However, an ESD assessment and where necessary, a suitable test, should take this threat into consideration when relevant. (Note: munitions with such enclosures or packaging components are still required to meet the requirements for personnel and helicopter discharge as set out in this standard).

Once the shielding effectiveness of the "equipment under consideration" has been determined, it is necessary to examine the effect due to a contact discharge. For those enclosures which are conductive, the threat is minimized for the hazards within the scope of this document.

Current induced onto circuits adjacent to an ESD event may be minimized by the use of transient suppression hardware. The effectiveness of the transient suppression hardware installation must be analyzed for its response to a broadband electromagnetic pulse, such as that produced by an ESD event. It is stressed that the installation of transient suppression hardware does not necessarily infer that the item is ESD insensitive especially in case of voltages lower than the maximum 25 kV for personnel-borne or the 300kV for helicopter-borne ESD. On the basis of the previous considerations it must be decided if testing is necessary. A decision that testing is not necessary must be approved by the responsible NSAA.

A4 TESTING CONSIDERATIONS

A.4.1 General

This clause of the annex provides recommendations on items of concern when one has determined there is a need for ESD testing. Recommendations are made on the preconditioning of the test item, the selection of discharge locations, the energy transfer techniques used, the shape of the electrode, and the number of items required for testing.

AECTP 501 [Ref 2] addresses the techniques for testing avionic systems which may be subjected to personnel handling under conditions which are much less severe than those required by Ref 1. The techniques, however, can be applied to the higher levels of discharge voltage required by Ref 1.

A.4.2 Preconditioning

Clause 6.5 requires that the test item be preconditioned for a minimum of 24 hours to a temperature of $23^{o}C \pm 10^{o}C$. Some weapon system components have been found to be more sensitive to an ESD threat at lower temperatures. Should the life cycle of the weapon system or component include exposure to low temperatures, it is recommended that the item be tested at those temperatures when it is felt that such an environment may make the item more sensitive to electrostatic build-up or discharge.

Clause 6.5 also states that ESD testing should be conducted at relative humidity of less than 60% where practicable. It also recommends that the test item be preconditioned to the testing environment for a minimum of 24 hours. It is recommended that ESD testing be conducted at as low a relative humidity as is practicable but < 60%. If the test item has not been preconditioned , the water in the air may condense on (or just below) the surface of the test item. Such a moisture layer may act as a partially conductive layer that may act to protect the test item during the testing.

A.4.3 Selection of Discharge Locations

The selection of discharge locations should be made from a review of the Hazard Assessment (see **Clause A.3**). The test points chosen must be based on those locations identified to be potentially sensitive to either direct penetration or excitation of the test item with internal distribution of the energy.

A.4.4 Energy Transfer Techniques

A.4.4.1 Electrode Geometry

For Air Discharges, the geometry of the discharge probe is an important aspect in the efficiency of the threat simulation hardware in the transfer of the energy stored in the capacitor(s). The lower the radius of curvature (i.e., the sharper the point), the more concentrated the electric field will be on the tip. Once the energy stored in the capacitance of the threat simulation hardware is transferred to the discharge probe, ionization will occur. The sharper points will experience more leakage at lower voltages because of the concentration of the electric field lines. Since a ball-type electrode with a large radius of curvature will result in less ionization, it is the recommended geometry for the discharge probe.

Note that for the air discharge test method for personnel-borne ESD, a discharge electrode with a size and shape as shown in **Figure 508/2-3** should be used. Maintain a smooth, clean and shiny electrode surface to ensure high electrical conductivity and uniformity of discharge.

For contact discharges the shape of the electrode is of less importance. The electrode used should be documented as part of the ESD equipment used.

For Helicopter ESD the electrode geometry chosen for testing should be based on the threat that may be experienced and the energy transfer technique to be used. The electrode used shall be documented as part of the ESD equipment used.

A.4.4.2 Discharge Techniques

There are several techniques that have been used in the past for the triggering of the simulated personnel ESD threat. Those most often discussed are: (1) gapped discharge by either an approaching probe or across a fixed gap, and (2) a touching discharge.

a. Gapped discharges (fixed gap or approaching probe) are often specified by test agencies because they are more exemplary of the actual events. The spark can produce both electrical and mechanical damage whereas a touching discharge will produce only electrical damage. However, there can be a large variation between one test stimulus and another because of the wide variation in the energy lost in the ionization of the gap. The use of a touching electrode with test equipment which provides the spark gap internally will provide more control over the coupling of the threat to the test item and in discharging to the test points selected.

    i. Approaching probe. When conducting testing to the personnel-generated ESD threat with the approaching probe technique a probe with the electrode is driven (e.g. by electric motor) toward the test item. The energy is transferred to the probe immediately prior to the initiation of movement. This technique simulates a real approach with an air discharge. The starting distance and the approach velocity must be well controlled to make sure significant energy is not lost prior to the discharge and ensure the energy delivered is comparable between discharges. However, the distance between the probe and the test item and the exact location of the discharge may not be repeatable and this is one reason why multiple tests are required. A number of nations use this technique as they consider it to be the most realistic - although the energy lost in the air gap will reduce the amount transferred to the test item.

    ii Discharge across a fixed gap. When conducting testing to the personnel-generated ESD threat using the fixed gap technique the probe is positioned at the required test point at a distance from the test object which will allow a discharge to the object to occur. This method will be more repeatable than the approaching probe technique but is less realistic to the actual threat situation. It should normally only be used when the susceptibility assessment suggests this is likely to be a significant risk in practice.

b. Touching discharges when conducting testing to the personnel-generated ESD threat using the contact discharge technique, the probe is placed in direct contact with the identified test points on the item. This will transfer most energy to the test item and will be repeatable for calibration and for discharges to conductive and non-conductive surfaces. It is also the best method to use to direct the discharge to a particular test point, especially small points such as pins or small non-conductive areas (e.g. antennas in inductive fuzes). For this reason, it is considered by some nations to be the most severe technique because it transfers almost all the energy to the test point and is also a realistic discharge scenario, although it does require more accurate determination of the most probable and sensitive discharge locations

A.4.4.3 Two techniques have been used in simulating the ESD threat produced by external helicopter transport.

a. To charge the test item to the test voltage (such as 300 kV) and to then bring a grounded wand into the proximity of a point on the test item where a discharge is desired. Once the grounded wand approaches the charged test item, a spark discharge will be generated. The exact location of the source of the spark is difficult to control using this procedure but it more closely resembles the real life situation.

b. Use of a Marx Generator. In these cases, a touching electrode connected to the test item and the desired discharge point is often used. The triggering of the spark is provided by the breakdown between the stages of the Marx Generator. The discharge location can be controlled very easily with this type of procedure. However, this method has to be used with caution, as the discharge location(s), has to be carefully selected to ensure it is one that is likely to be affected (i.e. consideration of the geometry of the test sample is necessary). Also, due to the fixed gap in the generator, the energy transferred may differ from the case of an approaching electrode.

A.4.5 Number of Test Samples

The number of test samples used is critical in the assigning of relevance to ESD test results. Depending on the munition, the tests will have to cover safety as well as suitability for service aspects, which will determine the number of test samples required. Because most ESD testing is go/no-go in nature, the results can generally only be examined statistically. In addition to the normal statistical variation of such type of testing, the confidence in results of tests of explosives components is decreased by the fact that there may be significant variation in many components from lot to lot. Accordingly, only limited confidence should be given to the fact that one test item survived a test threat. Such a sample size can be seen from **Table 508/2–A1** to correspond to the item being 50% reliably insensitive to such a threat (with a 50% confidence level). As can be seen in **Table 508/2–A1**, when the number of samples used is 10, the confidence level goes to 80% and the reliability that the item is insensitive goes to 85%. For 22 tested items, the confidence level goes to 90% with a reliability of 90%.

A.4.6 Number and Parameters of Discharges per Test Point

The number and parameters of discharges are critical in providing a valid test result. Experience shows, that in some cases single discharges have no negative effect while multiple discharges can result in damage or reduced safety. Also the voltage, polarity and the resistance used influence the results. In some cases using a lower voltage, a reversed polarity or the different resistor (and therefore different pulse length and shape) may cause damage not previously seen.

The number of discharges and the sequence of application will have a strong influence on the time it takes to test the munition samples. For most munitions it is not advisable to test all parameters (5 voltages, 2 polarities, 2 resistors and multiple discharges) for each test point. Instead a good selection and a limited number of discharges per test point should be determined. The susceptibility assessment and test plan should identify the number of samples and test parameters for the specific item under consideration. An example test sequence is shown in **Table 508/2 – A2.**

Reliability %	Confidence Level (%)						
	50	60	70	80	90	95	99
99	69	92	120	160	229	298	459
95	14	18	24	31	45	58	90
90	7	9	12	15	22	29	44
85	5	6	8	10	15	19	29
80	3	4	6	7	11	14	21
75	3	4	5	6	8	11	16
70	2	3	4	5	7	9	13
65	2	2	3	4	6	7	11
60	2	2	3	4	5	6	9
50	1	2	2	3	4	5	7

Table 508/2 – A1 Number of Tests without Failure Required to demonstrate Reliability at Various Confidence Levels

Test each 50% Test Sample	500Ω	5000Ω
Discharge at Each Test Point for Each Test Sample	1x ±5kV 1x ±10kV 1x ±15kV 1x ±20kV 1x ±25kV	1x ±5kV 1x ±10kV 1x ±15kV 1x ±20kV 1x ±25kV
Total Discharges per Test Point	18	18

Table 508/2 – A2 Example Test Sequence

A.5 SIMULATION HARDWARE CALIBRATION

A.5.1 General

Clause 8 requires that the threat simulation hardware used in the testing of a weapon system to the ESD threats be calibrated prior to the start of testing and at the completion of such testing. The following clauses provide guidance in the calibration of threat simulation hardware.

A.5.2 Calibrated Test Load

The test load, as shown in **Figures 508/2 – A1** & **508/2 – A2**, should be coaxial in design with a resistance of 1 Ω between the centre conductor and the ground shield. Alternatively the 2 Ω coaxial test load described in Ref [3] may be used. The output of the threat simulation hardware used in testing to the personnel-generated ESD threat should be recorded when discharged into a calibrated test load. The resistance of the test load should be linear over the frequency range of DC-to-100 MHz.

There is no calibrated test load proposed for use in testing to the helicopter external transport threat. The test load used when recording the calibration waveforms must be described in the test report.

A.5.3 Acceptable Calibration Procedures

A.5.3.1 General

The calibration procedures described below may be used in the calibration of threat simulation hardware used in testing to the personnel-generated and external helicopter transport threats.

A.5.3.2 Personnel-Generated Threat Calibration Procedure

The threat simulation hardware output electrode should be touching the centre conductor of the calibrated test load. Waveform measurements should be made at both positive and negative polarities at 10, 15, 20, and 25 kV levels. The output of the calibrated test load should be fed (using 50 Ω terminators and/or attenuators, as applicable) directly into a data acquisition system which has a frequency range of DC-to-500 MHz. A typical circuit is shown in **Figure 508/2 – A3** and the idealised test waveform is shown in **Figure 508/2 – A4**. The rise time shall typically less than 15 nanoseconds. Since in actual test circuits ringing will occur the smooth waveform in **Fig 508/2 - A4** is not often found. A more typical waveform is shown in **Fig 508/2 – A5.**

A.5.3.3 External Helicopter Transport Calibration Procedure

The calibration procedures used for hardware developed to simulate the external helicopter transport threat may be developed by the agency conducting the testing. The calibration procedures used should be described in the test report along with the simulation hardware output waveforms recorded during the calibration procedures.

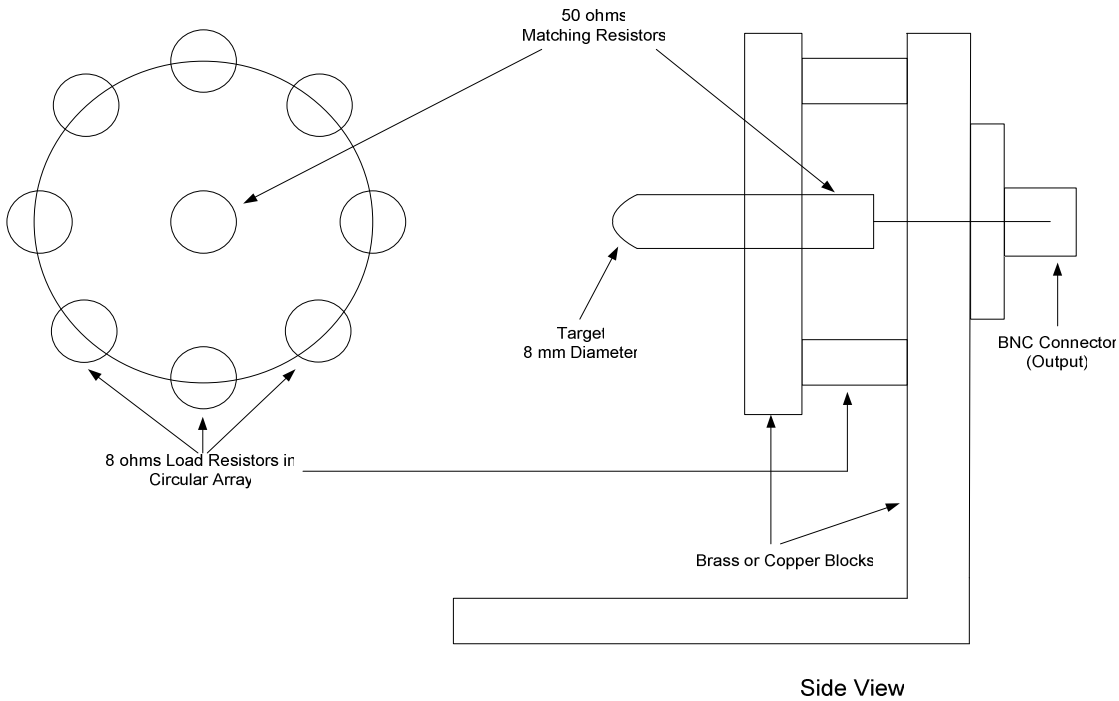

Figure 508/2 – A1 ESD Standard Load Design

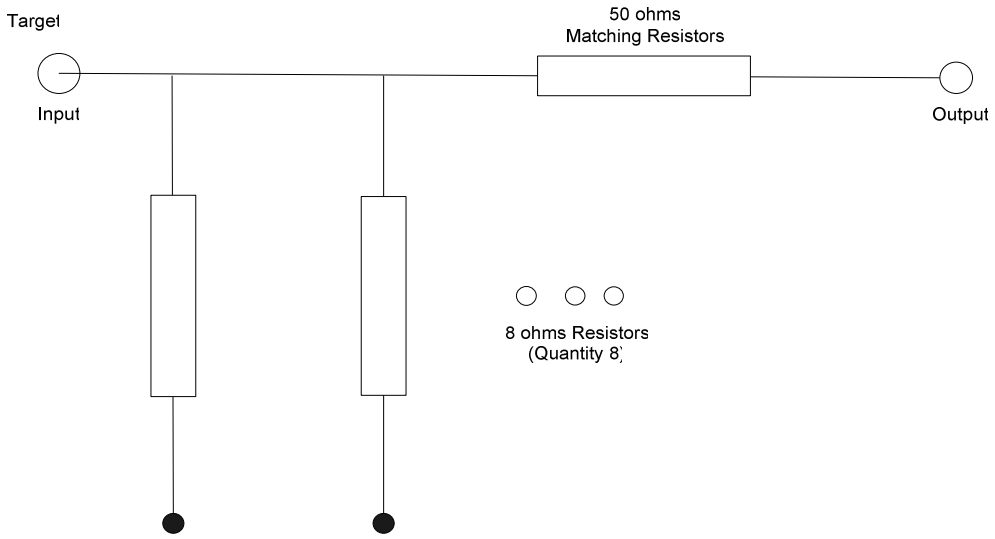

Figure 508/2 – A2 ESD Standard Load Electrical Model

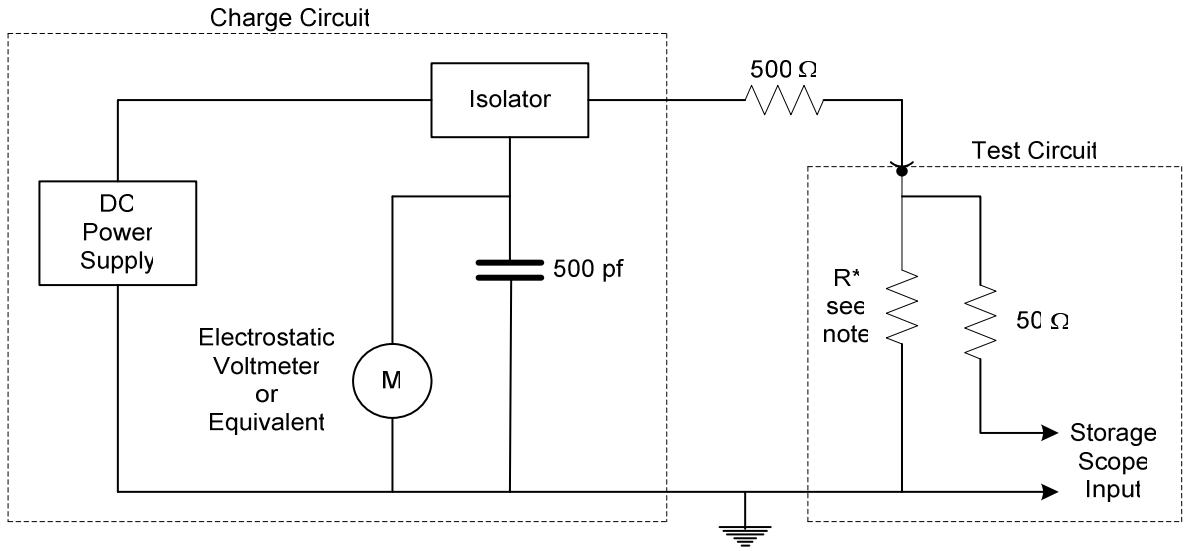

Value of R can be 1 or 2 ohms

Figure 508/2 – A3 Personnel-borne ESD Waveform Calibration Circuit

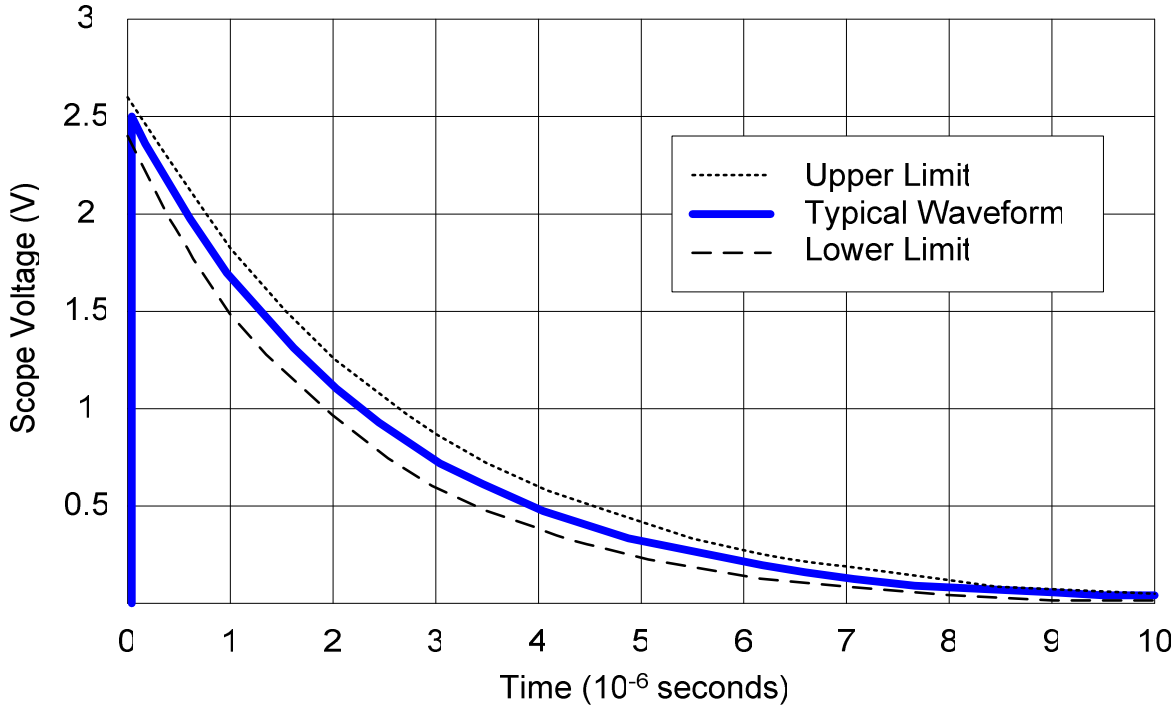

Figure 508/2 – A4 Typical ESD Waveform

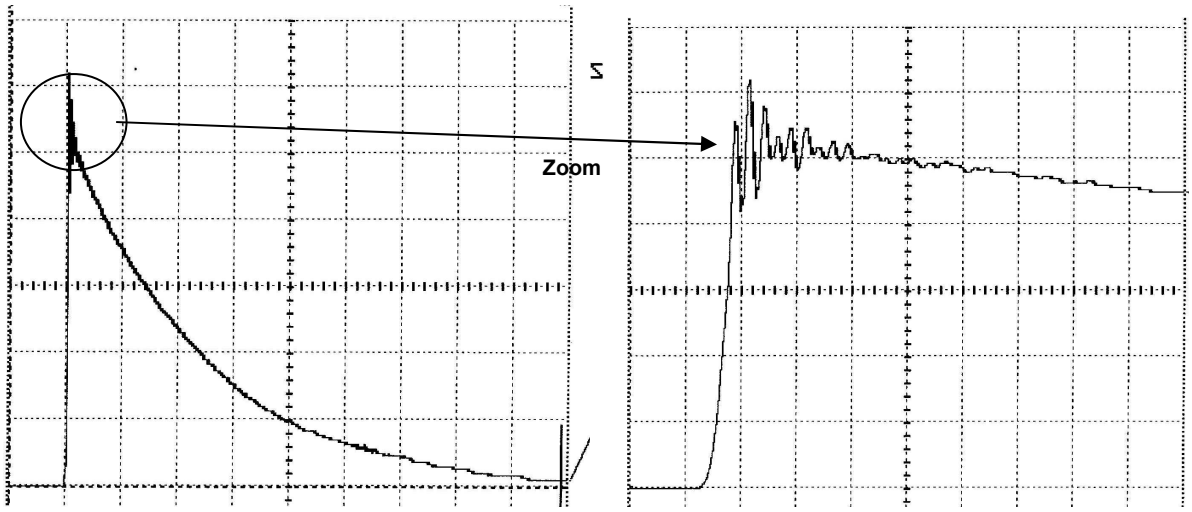

Figure 508/2 – A5 Typical ESD Waveform from Test

CATEGORY 508: LEAFLET 3

HAZARDS OF ELECTROMAGNETIC RADIATION TO ORDNANCE (HERO) TEST PROCEDURE

1 AIM 508/3-3

2 APPLICABILITY 508/3-3

3 BACKGROUND 508/3-3

3.1 Sources of Electromagnetic Radiation 508/3-3
3.2 Electromagnetic Radiation Levels (EMR) 508/3-3
3.3 HERO Assessment 508/3-4

4 AIM OF THE ASSESSMENT PROGRAM (HAP) 508/3-4

4.1 Purpose of the HERO Assessment Programme (HAP) 508/3-4
4.2 Provisions of the HERO Assessment Report (HAR) 508/3-4

5 SCOPE OF THE HERO DESIGN ANALYSIS (HERODA) 508/3-5

6 GENERAL REQUIREMENTS FOR CONDUCTING TEST 508/3-6

7 TEST PLAN 508/3-7

7.1 Designation 508/3-7
7.2 Configurations 508/3-7
7.3 Drawings 508/3-8
7.4 Electrically-Initiated Devices 508/3-8
7.5 Electronic Switches 508/3-8
7.6 Electronic Sub-Systems 508/3-8
7.7 Filters 508/3-8
7.8 Susceptibility Appraisal Results 508/3-8
7.9 Measurement System Instrumentation 508/3-9
7.10 Test Facilities Description 508/3-9
7.11 Test Procedures 508/3-9

8 TEST REPORT 508/3-9

9 ACCEPTANCE CRITERIA 508/3-10

9.1 Safety and Reliability Margins 508/3-10

10 EMR THREAT TEST PROCEDURES 508/3-11

10.1 Introduction 508/3-11
10.2 Munition Configuration/Condition 508/3-11
10.3 Electromagnetic Environment Simulators 508/3-11

11 APPLICABLE DOCUMENTS 508/3-16

11.1 Referenced 508/3-16
11.2 Information Only 508/3-16

12 ACRONYMS 508/3-16

ANNEX A MAXIMUM RADIO FREQUENCY ELECTROMAGNETIC ENVIRONMENT FOR ORDNANCE OF UNKNOWN SUSCEPTIBILITIES 508/3-A1

FIGURES

Figure 508/3 – A1 Potentially Hazardous Electromagnetic Field Strengths vs Frequency 508/3-A2

Figure 508/3 – A2 Half-Wave Resonant Dipole Model 508/3-A3

TABLES

Table 508/3 – 1 Fallback Margins for Assessment of Results 508/3-11

Table 508/3 – A1 Equations for Computing Safe Field Strength/Distance for HERO UNSAFE Ordnance 508/3-A2

CATEGORY 508 LEAFLET 3

Hazards of Electromagnetic Radiation to Ordnance (HERO) Test Procedures

1 AIM

The aim of this leaflet is to define the assessment procedures and test methods to be used in determining the safety and suitability for service of munitions containing electrically-initiated devices (EIDs) and associated electrical/electronic subsystems, exposed to the Electromagnetic Environment (EME) for NATO Forces. The effect of EME to ordnance and weapon systems containing EIDs is commonly referred to as Hazards of Electromagnetic Radiation to Ordnance (HERO).

2 APPLICABILITY

This leaflet applies to any munition or store containing EIDs and their associated electrical/electronic systems. It covers all life cycle phases including storage, transit, handling, embarkation, disembarkation, testing, loading to weapon platform, loaded on weapon platforms, preparation (including the use of pre-setters, programmers or similar units when loaded), launch and disposal. This agreement shall apply to such munitions up to the safe separation distance from the launch platform except for air and surface wire guided missiles where it should apply from launch to target. The agreement shall also cover launchers except for those covered specifically by other STANAGs.

3 BACKGROUND

3.1 Sources of Electromagnetic Radiation

Many sources of Electromagnetic Radiation (EMR) may be encountered during the handling and deployment of munitions. AECTP258 Ref [1] defines the minimum design electromagnetic environment associated with the threat presented by radio and radar transmitters and munitions systems throughout their life cycle.

EIDs perform a variety of functions, such as initiating rocket motors, arming and detonating warheads, ejecting chaff and flares, and initiating cutters, protractors or thermal batteries. HERO arises when any of these functions occur unintentionally or prematurely, as a result of exposure to RF energy. There are two potential forms of unintentional, RF-induced EID response:

a. An activation of the initiating device by RF energy either coupled directly into the device (with the system powered or unpowered) or causing upset of an energized firing circuit, resulting in a firing signal being erroneously sent to the EID, or

b. Degradation (dudding) of the initiating device by directly coupled RF energy.

In the first case (a), inadvertent EID activation can have adverse consequences on safety (e.g., premature initiation of explosive trains) or reliability (e.g., once initiated, the EIDs can no longer perform their intended function, thus rendering the system incapable of performing its mission). In the second case (b) the presence of RF energy in an EID can alter its ignition properties (without actually firing the device) so that the device will not function when legitimate firing stimuli are applied.

3.2 Electromagnetic Radiation Levels (EMR)

The EMR levels of concern in this leaflet are those which may be generated by:

a. Radio and radar emitters, both military and civilian, which exist external to the munition. The emitters may be carried on the weapon platform or consort platforms or exist as fixed or mobile installations separate from the munition and its weapon platform.

b. Radio and radar emitters and sources carried by the munition itself.

3.3 HERO Assessment

HERO assessments and tests are used to determine whether the EIDs and/or associated electrical/electronic systems will remain safe and suitable for service in all the different states of their life cycle while exposed to the EME encountered during NATO Operations. Assessments and tests shall consider the system in both the passive (switched "off") and active states and in all operational modes. The consequences of failures in these states may differ, for example:

a. In the passive state: no instantaneous effect is acceptable and no delayed effect (i.e. only apparent when in the active state) is acceptable due to latent damage.

b. In the active state: no instantaneous effect is acceptable and there should be no increased risk of an unacceptable event or loss of system functionality.

The requirements for the assessment of the capability of munitions and weapon systems to withstand HERO effects are discussed in **Clauses 5** and **6**. The assessment shall be made by means of a HERO Design Analysis (HERODA) which shall be part of the HERO Assessment Programme (HAP) as described in **Clause 4**.

4 AIM OF THE ASSESSMENT PROGRAM (HAP)

4.1 Purpose of the HERO Assessment Programme (HAP)

The purpose of the HAP is to ensure the HERO hardness of the munition and weapon system is adequately addressed and demonstrated. The HAP shall be started at the preliminary design phase of a project and shall be carried through to completion of the assessment and tests. It shall be reviewed, amended and added to as necessary during the life of the project. It is particularly important that HAP should discuss life cycle issues, such as HERO protection, which degrade with time or use, i.e. shielding, RF gaskets, etc. Where necessary, an appropriate maintenance and testing programme should be proposed. The assessment program shall require the production of the information listed below. This may be included in a single overall HERO Assessment Report (HAR) or contained in separate documents according to national practice. However, the complete set of data is required to ensure a full assessment has been carried out. In the absence of a HERO assessment/test and/or the availability of susceptibility data (i.e., defined Maximum Allowable Environments (MAEs) and/or Susceptibility RADHAZ Designator (SRAD) codes) it is difficult to provide practical guidance to ensure safety.

Annex A defines the maximum RF environment for any ordnance system when specific MAEs or susceptibility data are not available or for items that have not been evaluated for HERO. These environments can be used to define the maximum allowable environment that emitters can generate and not affect the functioning of electrically initiated ordnance of unknown susceptibilities.

4.2 Provisions of the HERO Assessment Report (HAR)

a. A statement defining the general environmental conditions (climatic, mechanical and electrical) in which the munition is required to be stored, transported, maintained and operated.

b. A HERO Design Analysis (HERODA) (see **Clause 5**).

c. The relevant Test Plan (TP) and Test Schedule (TS), if testing is required (see **Clause 7**).

d. Report(s) of all tests made with analysis, conclusions and recommendations (as required by **Clause 8**).

e. Final assessments, conclusions and recommendations from all above results. (This may include conclusions from consideration of other EM environmental effects [e.g. ESD, Lightning]). These aspects may be covered in the test report.

5 SCOPE OF THE HERO DESIGN ANALYSIS (HERODA)

5.1 The HERODA shall be documented by the Design Authority and agreed with the National Acceptance Authority (NAA) early in the development of a project. It shall be a continuing process with revisions agreed with the NAA as they become necessary.

5.2 The HERODA shall:

a. Outline the general construction of the weapon to identify the siting of the EIDs and their associated circuits and noting in particular the electromagnetic protection given to them.

b. List the EIDs with their no-fire threshold power/current and energy, thermal time constant and bridgewire resistance.

c. Identify and describe the electrical/electronic devices and circuits which are part of an overall EID firing system within the store. This shall include all associated electronic/micro-electronic systems.

d. Identify those EID and circuits where inadvertent initiation or operation is likely to cause a hazard (safety) and those likely to degrade the system effectiveness (reliability). Identify the acceptable margin (agreed with the NAA), with respect to the specified RF environment, to be demonstrated for both safety and reliability (see **Clause 9** and **Table 508/3–1**).

e. Define the possible EME paths through the weapon from the data given at (a) and (c) above. This shall take into account that inadvertent functioning may occur when energy from the EME enters the weapon system via various channels such as:

   1. Insulating and partially conductive composite materials
   2. Weapon skin discontinuities (e.g. joints)
   3. Open inspection covers
   4. Connectors/umbilical cables (to launcher or test equipment)
   5. Tools and Fingers (touching connectors))

   These channels make the weapon system particularly vulnerable during handling, assembly, disassembly, loading and unloading operations. For these reasons, during the phase where the munition is being loaded to or unloaded from its launcher the effect of the launcher, handling/loading equipment and handler have to be taken into account.

f. Analyse the different configurations of the weapon system in all stages of its life cycle in order to determine the critical situations particularly during the following operation phases:

   1. Transportation/storage, storage in tactical or logistics container (even if the container provides screening).
   2. Assembly/disassembly
   3. Staged (i.e. Unpackaged awaiting use)
   4. Handling/loading
   5. Platform-loaded (Powered and Unpowered)
   6. Immediate post-launch (similar to powered mode of 5 but may have different electrical configuration and be exposed to higher fields).

   Different physical configurations can be expected to offer different levels of RF protection. Furthermore, it is likely that the EME associated with each phase will be quite different. (For example, the EME levels associated with handling/loading operations are generally less than those encountered during certain other phases.) Thus, the potential for a HERO problem is

highly dependent on both of these phase-dependent conditions. From a HERO test standpoint, it is especially important to test all unique ordnance configurations.

g. Take into account the susceptibility of electronic circuits identified in **c**. The malfunction of those circuits is generally related to switching resulting from direct radiation, or coupled energy due to the impressed field's interaction with system wiring and circuit components. The induced energy may lead to a transient malfunction, permanent change of status (during exposure) or perhaps irreversible damage.

h. Include within the assessment consideration of the effects of the modulation parameters of the emitters on rapidly-functioning igniters (e.g. Conducting Composition [CC] devices) and electronic components.

i. Provide theoretical analysis where possible which positively indicates that the pick up on EID firing lines or in associated electronic circuits is low enough to assure an acceptable safety margin in the EME specified. (Any assumptions or inaccuracies in the analysis procedure are to be stated).

5.3 With the help of the HERODA report, the NAA is able to make a decision on whether tests are required to demonstrate the practical susceptibility of the weapon or store in EME. When testing is accepted as necessary, it shall be conducted following the requirements defined in **Clause 6** and testing procedures defined in **Clause 10.3.5**.

6 GENERAL REQUIREMENTS FOR CONDUCTING TEST

When testing is necessary, it shall take account of the following general requirements:

a. The tests are intended to determine the response of the EIDs and associated electrical/electronic subsystems to the EME threat. They shall be conducted on an instrumented weapon or store which is representative of the production standard, but free from explosives and propellants.

b. The items selected for testing shall be fully assembled with inert instrumented EIDs and functional subsystems approved by the NAA. If it is considered that the susceptibility of the munition to EME could be affected by the presence of explosive material then it should be replaced by Electrically Representative Material (ERM). (*Note this is rarely necessary*).

c. The tests are to be carried out on the weapon system in conjunction with the associated launcher, parent vehicle (where practical) and test equipment representative of each stage of operational deployment as identified in **Clause 5.2 f**.

d. For simple hard-wired firing circuits with EIDs fitted with sufficiently sensitive instrumentation, it is permissible to extrapolate field strengths/power densities and induced power to the maximum threat level, because the response is held to be a linear function of the incident EMR. In theses cases tests can be performed at fields below the threat level. In the case where no response is detected during a test, the extrapolation will be from the Minimum Detectable Current (MDC) of the instrumentation.

e. For situations in which the firing circuit or safety-critical system contains components which have non-linear responses (such as semi-conductors or electronic devices liable to saturate), the behaviour of the susceptible component or assembly at one level of irradiation cannot be extrapolated to a higher level. Non linearity may also be introduced by sparking between parts of the circuit. Where the full threat level (plus a safety margin) cannot be achieved in the test facility, Bulk Current Monitoring (BCM) may be used to determine the transfer function between an impressed EME and the resultant currents flowing in the component wiring/circuitry. This transfer function is then used to determine the levels of bulk current injection (BCI) needed to demonstrate that an acceptable margin above the full threat EME has been achieved before a malfunction occurs. This technique is only applicable over a limited frequency range and is used only for testing live electronics. Alternatively, where adequate electromagnetic sources exist, go/no go tests may be

conducted on the fully assembled store, instrumented to detect any malfunctions. In either case, the nature of the tests, and the methodology to be employed, should be approved by the NAA.

f. When carrying out tests, it is particularly important to include sufficient measurement frequencies to permit the identification of possible resonant conditions over a narrow frequency band.

There are two methods of establishing the EME test frequencies, the swept frequency technique and the discrete frequency technique. Swept (continuous) frequency testing is the preferred technique from the standpoint that the test item is exposed to all frequencies within a particular frequency band; this improves the probability of stimulating the munition or weapon system at resonant frequencies, where responses are greatest. If the required field intensity levels are relatively low and the test facility is capable and authorized to conduct swept frequency testing, this is an excellent way to conduct HERO tests.

Even if there are significant limitations on the field intensities that can be generated, swept frequency testing may uncover resonances that would otherwise not be detected in discrete frequency testing. Care should be taken to ensure that the frequency sweep rate allows sufficient time to cater for the heating/cooling rate of the bridgewire. Unfortunately, it is generally not possible to generate the required full threat levels when sweeping frequencies because of limitations in equipment and/or frequency authorization in open-air test facilities. An alternative is to generate a test EME characterized by small, incremental frequency steps. However, practical limitations in the time required to tune high power sources generally preclude testing at finely spaced frequencies. HERO testing often uses the discrete frequency technique in lieu of swept or fine, incremental frequency testing. Here the challenge is to generate a sufficient number of discrete frequencies to characterize EID response as well as to capture representative threat frequencies (and pulse characteristics) as defined by the NAA, within certain acceptable error margins. **Clause 10.3.5.1a** contains guidance on frequency increments

g. Direct non linear effects may be produced by high intensity pulse fields in the microwave bands or during transients (switching or connecting cables) in the HF, and VHF bands. These non linear effects are generally produced at interfaces between two conductor materials and the arcs created give wideband frequency harmonics. These phenomena can be generated by the fields and generally occur where the source of emission is pulsed and placed in close proximity to the munition. Selection of the location of the irradiated zones shall be based on those zones assessed to be likely to produce non-linear effects or sparking from either direct penetration of the EMR field or excitation of the structure and subsequent internal transfer of the energy.

7 TEST PLAN

A TP shall be prepared in conjunction with the test agency. The TP shall include, but not be limited to the following information.

7.1 Designation

The full designation type, build or design standard/specification (including software build standard) of the munition or weapon system to be tested together with a description of the munition.

7.2 Configurations

All configurations, the modes of operation to be employed and the associated systems (launcher, etc.) to be used in the tests should be identified. The munitions or weapon system under test shall be representative of the final production configuration, assembly practices, and cable and connector design and installation.

7.3 Drawings

The manufacturing standard electrical/electronic circuit wiring drawings of the munition or weapon system and in particular, fully detailed drawings of firing systems containing EIDs including all electronic devices or sub-systems directly associated with the initiation of any EID need to be provided as part of the documentation.

7.4 Electrically-Initiated Devices

Details of the type(s) of EID installed including:

a. Designated national/manufacturer's Type/part No/Mark and identification as bridge wire, conducting composition, thin film, exploding bridge wire or exploding foil initiator EID.

b. The resistance range and the pin-to-pin DC no-fire threshold (power or current and energy levels as appropriate) and, where relevant, the DC or RF no-fire threshold level in the pin-to-case mode.

c. Either reference to or details of the EID firing tests procedure/strategy employed and the tests results used to derive the no-fire threshold values. These results will include the parameters of the corresponding statistical distributions (mean, standard deviation, number of items used for the determination of the threshold).

7.5 Electronic Switches

Details of the types of electronic switches used in EID firing circuits including:

a. Designated national/manufacturer's Type/part No/Mark and design specification.

b. Inter-electrode capacitance values.

c. Design minimum threshold switching level.

7.6 Electronic Sub-Systems

Details of all electronic sub-systems associated with the initiation of any EID including information on:

a. The National electromagnetic compatibility test standard(s) applied and the results achieved.

7.7 Filters

Where RF filters or other attenuating devices are incorporated in EID firing systems, information on:

a. Manufacturers/National Design Specification/Standard.

b. Maximum RF and DC current ratings.

c. Minimum rated RF attenuation as a function of frequency over the range of operating conditions.

d. Maximum rated RF power dissipation.

e. Temperature operating range.

7.8 Susceptibility Appraisal Results

The results of any initial appraisal and/or analytical study of the munition/weapon system EID firing system to determine:

a. The theoretical electrical pick-up of each EID firing line and the need for and/or the extent of any practical and specific electromagnetic radiation susceptibility tests.

b. The test points and supporting rationale for their choice, the locations of critical zones to irradiate during the tests, the specific data to be recorded during the tests.

c. Resultant HERO Safety Margins and Reliability Margins. (See **Clause 9.1**).

7.9 Measurement System Instrumentation

7.9.1 The description of the instrumentation to be used to measure the RF susceptibility of each EID installed including:

a. The type of sensor i.e. thermocouple/thermopile/thermistor/diode/optical device etc, including the time constant (see **Clause 10.3.4** for more detail).

b. The type of transmitter/receiver and remote read out instrumentation package used including resolution and dynamic range and whether the pick up levels are to be recorded or observed in real time.

c. The minimum detectable power or current levels for each EID firing circuit and confirmation that the appropriate safety factors can be demonstrated in the proposed test EME.

7.9.2 The type and design specification of the instrumentation/monitoring/measuring equipment to be used to measure the electromagnetic susceptibility of any electronic switch or sub-system directly associated with the initiation of EID.

7.9.3 The type and design specification of the test equipment to be used to measure the RF field strength/power density impinging on the munition or weapon system under test.

7.10 Test Facilities Description

A description of the test facilities to be employed should include transmitter characteristics, environment measurement techniques including transmit antenna-to-IUT separation distances and calibration procedures.

7.11 Test Procedures

Information on:

a. The data to be recorded for each EID.

b. The test procedures used to establish the electromagnetic susceptibility of the munition or weapon system in each configuration of its life cycle which has been identified in the HERODA (storage, transportation, assembly, disassembly, handling prior to loading, loading/unloading, loaded including any presetting or onboard testing or with live sub-systems in the munition, in flight up to and after separation distance if relevant).

c. Failure criteria for electronic systems (such failures should be repeatable to ensure that the EME is the cause).

8 TEST REPORT

The Test Report shall reference the results of the HERODA and TP and shall include:

8.1 The raw test data, in tabular form, which should include details of:

a. The applied field intensity/power density and frequency.

b. The level of power/current or energy recorded at each frequency at each EID or that monitored on the selected wires/looms to the electronics at the frequencies and field intensities/power densities applied. Where no pick-up has been measured the Minimum Detectable Stimulus (MDS) level of the instrumentation shall be recorded.

8.2 A statement of how the test environments were measured including the type of field probes used and placement of the probes with respect to the EID tested.

8.3 The instrumentation calibration procedures and complete calibration data for all sensors used to monitor EID responses shall be referenced.

8.4 A description of how the actual test procedures differed from those in the test plan.

8.5 A detailed description of how the raw data was analysed with EME characteristics and EID no-fire characteristics to determine the safety margins (see **Clause 10.3.6.2** for presentation options).

8.6 A summary of results shall include a presentation of the specified RF environment being used for assessment purposes, the margins for each configuration tested and a comparison with any theoretical assessment results. Graphical representation of the data is encouraged to increase the clarity of results.

8.7 In current practice, all EID tests use instrumented devices which respond to the average power of the impressed field. To obtain a meaningful susceptibility figure for pulse sensitive devices (conducting composition or thin-film bridge EID) involves applying a modifying factor to the average power susceptibility. This is derived from the EID Thermal Time Constant and the pulse characteristics of the emitter, and may be as low as 0.001. For munitions embodying such devices therefore, the results should be presented initially in a graphical form (average power susceptibility versus frequency) with no limit to the extrapolation applied. Correction for each pulsed emitter is then performed on a case-by-case basis using the formulae below to obtain a modified no fire threshold.

$$P(t_1, t_2) = \frac{P_{th}\,(1 - e^{-t_2/\tau})\,t_1}{\left(1 - e^{-t_1/\tau}\right) t_2}$$

Where: $P(t_1,t_2)$ is the mean NFT power to be used in HERO analyses for a repeated pulse stimulus

P_{th} average (DC) NFT power

t_1 is pulse width (of emitter pulse stream)

t_2 is pulse repetition period (1/pulse repetition frequency)

τ is thermal time constant of EID

8.8 A statement of the conclusions drawn from the results regarding the safety and reliability of the munition or weapon system when exposed to the EME to be encountered during its life cycle. There must be an unambiguous statement that the particular weapon has either met the acceptance criteria of this standard or not, and if not, identify those areas in which the shortfall occurs

9 ACCEPTANCE CRITERIA

9.1 Safety and Reliability Margins

For acceptance it must be demonstrated that any pick up in an EID circuit in the specified environment will not exceed a given level expressed as a margin in dB below the no-fire threshold stimulus for the EID concerned, or as a margin in dB below the malfunction or switching threshold for an electronic component (or electronic system, as applicable).The required margin is called either the "safety margin" or the "reliability margin" depending on the effect of an inadvertent initiation. This margin effectively reduces the No-Fire Threshold (NFT) of the EID. **Table 508/3-1** summarises the margins to be used in absence of National criteria. If acceptance is being made using theoretical analysis only, the margin to be used shall be agreed with the NAA.

REQUIREMENT	NON-ELECTRONIC SYSTEMS		ELECTRONIC SYSTEMS CONTROLLING THE FUNCTIONS OF EID, OR HAVING A SAFETY-CRITICAL APPLICATION	
	EID with NFT test method approved by the NAA	EID with NFT test method not approved by the NAA	Test Method by BCI on basis of scaled Transfer Function	Test method by GO/NO-GO over Test (see Note 1)
SAFETY	16.5 dB	20 dB	10 dB	6 dB
RELIABILITY	6 dB	10 dB	0 dB	0 dB
Note 1: These GO/NO GO test margins apply when the test field strengths/power levels reach or exceed the specified requirement				

Table 508/3 – 1 Fallback Margins for Assessment of Results

10 EMR THREAT TEST PROCEDURES

10.1 Introduction

The following clauses only address the testing procedures for the configuration(s) of munitions containing EIDs and associated electrical/electronic systems likely to encounter the EMR threat. When testing systems for the logistics/handling/loading etc phases of the life cycle the system will be unpowered and only direct EID pick-up will be measured. For operational phases when the system is live the electronics will also be tested. This may be combined with “normal” EMC testing of the equipment/system which requires additional instrumentation to monitor the electronics. It should be noted that sensitive EID instrumentation is potentially at risk when testing a live system as an inadvertent firing pulse will cause damage. Alternative means of detecting a firing pulse may therefore be necessary for live system testing.

10.2 Munition Configuration/Condition

The tested configurations are those which have been defined by the HERODA (see Clause 5). During the phase where the munition is on its launcher, the effect of the launcher has to be taken into account and has to be simulated if it is not available for the tests. Any protective caps or covers, connectors and/or shorting/grounding devices should be used during testing if they should be in place during the part of the logistics cycle simulated by the particular tests.

10.3 Electromagnetic Environment Simulators

10.3.1 Radio Frequency Environment Generator

The transmitting equipment used for the test must have sufficient stable power output over the EME frequency range to ensure that appropriate safety factors can be verified. Frequency output should be controllable to within a nominal 2% of each desired test frequency. Laboratory transmitting equipment normally consists of a series of RF signal generators and wideband power amplifiers which provide hundreds or thousands of watts. Military radars or equivalent systems may have to be used to provide the necessary peak powers associated with pulsed emitters to ensure that non-linear effects are stimulated in electronic circuits. When only part of the munition can be radiated at the required field strength it is necessary to ensure that the minimum length illuminated, at any frequency, is not less than about 10 times the wavelength.

An alternative technique for generating fields is the mode tuned chamber. This requires considerably less power to provide a high field strength but conducting HERO trials in such a chamber is not yet fully accepted. A proposal to use mode tuning should therefore be agreed by the NAA before work is commenced.

10.3.2 Antenna

Antennas used to perform EME testing must convert the output of the transmitting equipment into an electromagnetic field, which is repeatable and reasonably uniform, over the test item volume. As a rule, at frequencies below 1 GHz, the field intensity over the test item volume should not vary by more than 6 dB. At frequencies over 1 GHz, this is not normally practical and the test item must be moved in the field to ensure that all cracks, seams, and other penetrations are fully illuminated with the specified EME. Generally antenna should not be closer than 3 metres from the item under test for frequencies up to 32 MHz and 1 metre for higher frequencies.

10.3.3 EME Measurements

The field intensity must be measured using appropriate field measurement techniques. Field measurements should be made using equipment with an absolute accuracy of least 2 dB. Either of the following techniques may be used to ensure a calibrated field measurement.

10.3.3.1 Field Measurement Prior To Test

The most common method to measure the field intensity applied to a test item consists of field intensity measurements made in the empty test volume prior to the test. With a field meter at the test location, raise the transmitter output until desired test field level is reached. Measure the actual power output of the transmitter using a directional coupler and power meter or some other technique capable of measuring high power levels and note the transmitter power which produces this field intensity at the test volume. For test objects of significant size, the field should be measured at various points within the test volume to assess the field uniformity. Continue this process for each frequency and polarization to be tested. During the test, set the transmitter output power to the level noted during the calibration procedure.

10.3.3.2 Direct Field Measurement (DFM) During Test

Another method which may be used (especially for electronic equipment) is DFM. It consists of determining the field intensity on a munition or weapon system by placing field probes in the test volume during the test. In this way field intensity can be measured directly during the test. If this method is used, care must be taken to ensure that the field measurement equipment does not interfere with the field significantly, that the field probes are not interfered with by the test item (for example, there is an apparent field intensification near the ends of cylindrical objects), and that the field probes are close enough to the test item to closely approximate the field on the test item. As the requirements are somewhat conflicting this method requires technical judgement to be made and should be avoided where possible.

10.3.4 EID Instrumentation

The munition or weapon system being tested shall be instrumented to measure the response of the EIDs (and where relevant the electronics) to the EME. For EIDs utilising bridgewires to initiate the explosives, the key parameter to be measured is power. The live EIDs are replaced by inert EIDs instrumented with thermal sensors placed close to the bridgewire. One of the requirements is to keep the same electrical and physical characteristics as the EID bridgewire. Care must be taken when instrumenting a munition so that the instrumentation provides an accurate measure of EID response at all frequencies without significantly affecting the result. The primary concerns are that the shielding integrity of the munition shall not be altered by the instrumentation and that the instrumentation shall not form an additional inadvertent antenna. Some acceptable methods are explained in the following paragraphs.

10.3.4.1 Thermocouple Instrumentation

This type of instrumentation utilises a thermocouple (or thermopile) mounted either in contact with, or in close proximity to, a bridgewire. In the latter case a thermally conducting dielectric rod may be interposed to improve the thermal conductivity. The thermocouple produces a DC output proportional to its temperature rise, which is itself proportional to the amount of power (or energy) dissipated in the bridgewire. These devices can be calibrated using a DC current, which is equivalent to the RMS value of the induced RF current. The technical challenge to be overcome with this type of instrumentation is

to mount the sensor in proximity of the bridgewire of the EID and get its DC output from the munition in a way that will not disturb the EME characteristics of the munition. The preferred method is through the use of fibre optics. The thermocouple DC output is amplified and converted to a digital signal suitable for transmission via the optical fibre. In those instances where the electronic instrumentation does not fit inside the munition, the DC output of the thermocouples may be brought out of the fuze or munition to an external instrumentation package using filtered feed through connectors and shielded twisted pair. Tests may be necessary to ensure that the instrumentation external to the munition is not being interfered with by the EME nor providing a significant additional antenna for the munition.

10.3.4.2 Fibre Optic Sensor Instrumentation

There are some commercially available instruments designed or adapted for EME testing of munitions. These make use of small sensors mounted directly on a Fibre Optic (FO) cable, thus avoiding the use of processing electronics in the vicinity of the EID.

There are 3 or more types of FO sensors with sensitivity suitable for HERO work. Test Houses which frequently conduct HERO tests generally have one or more instrumentation types but where necessary advice should be sought from the NAA.

10.3.5 Test Procedure

A test procedure must be developed which details the exact steps to be taken by test personnel. This section provides a general outline of alternative procedures that may be used in the EMR testing of munitions containing EIDs and any associated electrical/electronic systems.

10.3.5.1 Incremental Step Frequency Test

a. A list of frequencies can be compiled by making the assumption that the EID circuit will undergo successive resonances, the lowest frequency of which could occur where the dimensions of the EID circuit correspond to a quarter wavelength. The Q factor of the lowest resonance could approach 100, indicating frequency increments in this region of around 1% of the preceding frequency. This would limit the measurement error to no more than 3dB, but practical considerations will dictate larger increments. The Q factor of higher resonant frequencies will reduce progressively, and frequency increments can be increased. As a guide step sizes of approximately 5% in the frequency range 30 MHz to 800 MHz are frequently used, increasing to up to 15% in the HF and microwave bands. Higher steps are used below the HF band.

b. At each incremental frequency the item under test (IUT) should be exposed to a gradually increasing test field until either the specified test level is reached, or the IUT indicates a response. The initial orientation should be as indicated in the HERODA.

c. For EID instrumentation, once a sufficient response is observed, cease increasing the field intensity and record its level together with the instrumentation response. If no response is detected by the instrumentation, record the minimum detectable level.

d. For electronic circuits, continue increasing the test level until either the specified level is reached or the IUT damage level is approached. Record the field level at each significant circuit response (if any).

e. Adjust the orientation of the IUT in suitable amounts, and repeat steps b. through e. at each position. Using the orientation at which maximum response was observed, perform any required adjustments to the configuration of the IUT (fitting cables, loading and handling, etc.) and record the IUT configuration, orientation and response.

f. Where appropriate, repeat steps (b**)** to (e**)** for alternate polarization of the test antenna.

g. Repeat steps (b) to (f) at each step in the frequency list.

10.3.5.2 Frequency Sweep Test

a. Due to broadcasting regulations swept frequency tests normally take place in a closed chamber or at low power in order to characterise resonances. The limited power capability of

wide-band equipment will restrict the maximum test field intensity, but this is partially offset by the comprehensive frequency coverage, which will identify sharp resonances of the IUT circuit and perhaps also reduce the number of IUT orientations required. The bandwidths over which the frequency is swept will be dictated by the characteristics of the test equipment, but are often 2:1 in frequency (one octave) at frequencies above 1GHz, somewhat wider at lower frequencies.

b. The rate of frequency change must take account of the speed of response of the EID instrumentation and/or electronic circuits contained in the IUT, and the need to correlate the IUT response with its corresponding frequency. A frequency sweep normally comprises a rapid sequence of finite increments of frequency. If the increments are relatively large (more than 1%, say) the dwell time at each increment should be long enough for the IUT to respond. For smaller increments the sweep time over an octave bandwidth should be at least 100 times the IUT response time constant.

c. For each sweep band the IUT should initially be oriented in the test position in accordance with the findings of the HERODA.

d. Starting at a low level, gradually increase the field intensity/power output during successive sweeps of the given band until either the specified test level is reached or damage to the IUT or its instrumentation becomes likely. Record each significant peak of IUT response and its corresponding field level and frequency. If no response is detected by the instrumentation, record the minimum detectable level.

e. Repeat step (d) for each **IUT** orientation, configuration and polarization specified in the test programme including, where appropriate, attachment of cables, loading and handling etc. When a resonance frequency is found, adjust the orientation of the item to increase the pick up current or voltage in the item.

f. Repeat steps (d) and (e) for each swept frequency band specified in the tests plan.

10.3.6 Data Analysis

10.3.6.1 Extrapolation

In many test facilities the EME requirements cannot be generated over all frequency ranges. A commonly accepted practice is to measure the response of EID instrumentation at the maximum available test field strength and extrapolate the result to the EME requirement level. In order for this extrapolation to be valid the following requirements apply.

g. The instrumentation must be sensitive enough so that its MDS level when increased by the ratio of the required field to the test field is still less than the no-fire threshold of the EID reduced by the appropriate safety margin (see formulae in Clause 10.3.6.2).

h. There must be some reasonable evidence that the response of the system is linear in the region between that at which the measurements are made and that to which they are to be extrapolated.

If these two conditions are met, EME test data can be gathered at levels readily available at most test facilities and extrapolated to high EME specification levels.

For most electronic circuits it is not possible to extrapolate the results of tests at low level, as the circuits will nearly always comprise non-linear components (e.g. semiconductors) where the degree of disturbance is not proportional to the level of stimulus.

10.3.6.2 Data Presentation Format

For EID there are two main methods of reducing, extrapolating, and presenting the results of EME test. One involves the calculation of the highest field level the Maximum Allowable Environment (MAE) at which the required safety margin is maintained and comparing it to the EME specification or standard applied for the item tested. The other method calculates the safety factor obtained at the specified EME and compares it to the required safety margin. Whichever format is used for this extrapolation and presentation, the raw data called for in Clause 9 should also be presented in the test report. Other formats may be used for presentation of results if they are clear as to the safety of the system being assessed. For electronic or other non-linear systems where extrapolation is not possible the report should present the actual safe field strengths that have been demonstrated.

a. MAE Format.

When data is calculated and presented in this format, the environment in which the item is safe and reliable is readily apparent. The MAE is the extrapolated field intensity where the current induced in the EID is equal to the NFT of that EID reduced by the appropriate safety margin (SM). The MAE is calculated using the following equation:

$$\text{MAE} = \frac{\text{NFTxTestEME}}{\text{Test Pick - up x SM}}$$

Where:

MAE = Maximum Allowable Environment for the considered EID in Vm^{-1} or Wm^{-2}

Test EME = Test/Field Intensity/power density of the Test Electromagnetic Environment (expressed in the same units as MAE)

SM = Safety Margin (as a ratio)

= Minimum required difference between MAE and field strength/power density at which pick-up equals the NFT

Note: SM as a ratio = $10^{SMdb/20}$ *if using amps and* Vm^{-1}

but = $10^{SMdb/10}$ *if using power and* Wm^{-2}

NFT = EID NFT_{dBW}

Test Pick-up = Current, Power or energy measured in the bridgewire of the EID. If no response is measured during testing, use the minimum detectable level.

If all terms are expressed in dBs the above equation can be written as:

$$(MAE)_{(dB(Vm^{-1} \text{ or } Wm^{-2})} = (NFT)_{dBW} + (\text{Test EME})_{dB(Vm^{-1} \text{ or } Wm^{-2})} - (\text{Test Pick Up})_{dBW} - (SM)_{dB}$$

This method is useful for a quick evaluation of a system if the required EME were to change. It also lends itself to a graphical presentation of the data which shows the system's response with respect to frequency and with respect to the EME specification in a manner clearly understandable by persons not familiar with this type of testing.

b. Safety Factor Format

When data is extrapolated and presented in this format, the level of safety afforded at the EME specification is readily apparent. The safety factor (SF) afforded at the EME specified is calculated using the following equation:

$$(SF)_{dB} =$$

$$(NFT)_{dBW} + (\text{Test EME})_{dB(Vm^{-1} \text{ or } Wm^{-2})} - (\text{Test Pick Up})_{dBW} - (\text{Specified EME})_{dB(Vm^{-1} \text{ or } Wm^{-2})}$$

Where the remaining terms have already been defined in **Clause 10.3.6.2 a**.

This method would be useful for a quick evaluation of a system if the safety margin requirements for an EID were to change for some reason. This method does not, however, lend itself to a graphical presentation of the data in a meaningful way.

Note: SF and SM are not the same and care needs to be taken if using this format to ensure that the differences are understood. For a system to be judged as safe SF should always be equal to or greater than SM (the required safety margin).

c. Susceptibility RADHAZ Designator (SRAD)

This format expresses the susceptibility of a system in terms of an SRAD for each RADHAZ frequency range (FR).

SRAD takes the following format:

Rp	Tp	Up	Vp	Wp	Yp	Zp

Where the letters R, T, U, V, W, Y and Z represent RADHAZ FR and the suffix letter (p) is a numerical index representing the RADHAZ susceptibility of the weapon for each RADHAZ FR. The system is fully described in AECP-2 Ref [2]. This format loses considerable detail and accuracy but is a useful method for exchanging susceptibility data between Nations where security may be an issue.

11 APPLICABLE DOCUMENTS

11.1 Referenced

Ref 1 AECTP 250 Category 258 Radio Frequency Electromagnetic Environments

Ref 2 AECP-2 NATO Naval Radio and Radar Radiation Hazards Manual

11.2 Information Only

AAP 55 NATO E3 Terms and Definition Glossary

AOP 38 Glossary of Terms and Definitions concerning the Safety and Suitability for service of Munitions, Explosives and Related Products

STANAG 4238 Munitions Design Principles Electrical/Electromagnetic Environment

STANAG 4560 Electro-Explosive Devices Assessment and Test Methods for Characterization

MIL-HDBK-240 HERO Test Guide

12 ACRONYMS

The following acronyms used in this leaflet are:

BCI Bulk Current Injection

BCM Bulk Current Monitoring

BW Bridge Wire

CC Conductive Composition

DC Direct Current

DFM Direct Field Measurement

EID Electrically-Initiated Device

EMR	Electromagnetic Radiation
EME	Electromagnetic Environment
ERM	Electrically Representative Material
ESD	Electrostatic Discharge
FO	Fibre Optic
FR	Frequency Range
HAP	HERO Assessment Program
HAR	HERO Assessment Report
HERO	Hazards of Electromagnetic Radiation to Ordnance
HERODA	HERO Design Analysis
IUT	Item Under Test
MAE	Maximum Allowable Environment
MDC	Minimum Detected Current
MDS	Minimum Detected Stimulus
NAA	National Acceptance Authority
NFT	No Fire Threshold
RADHAZ	Radio and Radar Radiation Hazards
RF	Radio Frequency
RMS	Root Mean Square
SF	Safety Factor
SM	Safety Margin
SRAD	Susceptibility RADHAZ Designator
TP	Test Plan
TS	Test Schedule

ANNEX A

MAXIMUM RADIO FREQUENCY ELECTROMAGETIC ENVIRONMENT FOR ORDNANCE OF UNKNOWN SUSCEPTIBILITES

A.1 GENERAL

This Annex defines the MAE for any ordnance system when specific susceptibility data are not available or for items that have not been evaluated for HERO. This MAE is used to define the maximum allowable environment that emitters can generate and not affect the functioning of electrically initiated ordnance of unknown susceptibilities.

A.2 APPLICATION

EMR hazards stem from the functional characteristics of electrically initiated ordnance. This EMR hazard is the result of absorption of electromagnetic (EM) energy by the firing circuitry of electrically initiated devices (EID's). Consequently, the induced energy causes heating of the EID's bridgewire and primary explosive with which it is normally coated. The ordnance EID's may be accidentally initiated or their performance degraded by exposure to RF environments. In general, ordnance is most susceptible to RF environments during assembly, disassembly, handling, loading, and unloading phases of the Stockpile-to-Safe Separation Sequence (S4). Significant differences in the physical configuration of the ordnance item can be expected as the item transitions from one phase to another which provide different levels of protection. Furthermore, it is likely that the EME associated with each phase will be quite different. For example, the EME levels associated with handling/loading operations (at the flight deck or weather deck of a ship) are generally less than those encountered during platform-loaded (main-beam levels). Thus, the potential for a HERO problem is highly dependent on both of these phase-dependent conditions. Consequently, in the absence of a HERO evaluation that considers all of the above, it is important to have a defined worst-case susceptibility value that can be used to provide operational guidance. AECP-2 provides a means for managing HERO based on degrees of susceptibility in the form of Susceptibility RADHAZ Designator (SRAD) codes. As discussed below, the defined HERO UNSAFE curve and equations are a means for computing safe field strength and distance and closely correlates to the SRAD code "0" across all frequency bands.

A.3 "HERO UNSAFE" CLASSIFICATION

"HERO UNSAFE" ordnance items are either: (a) those that have never been evaluated for HERO or (b) those that are in a condition (e.g. disassembled, unpackaged) for which no HERO evaluation has been made, Such items are at risk of being degraded or their EIDs functioning when exposed to an RF environment.

NOTE: This classification does not apply to percussion-initiated devices or systems. Ordnance or equipment which does not contain EID's has no HERO requirement.

A4 ENVIRONMENT

Figure 508/3-1 defines the MAE which shall be used for "HERO UNSAFE" items. It has been prepared on the basis of worst-case conditions and susceptibility and **Table 508/3-A1** shows the equations for computing safe field strength/distance for HERO UNSAFE Ordnance.

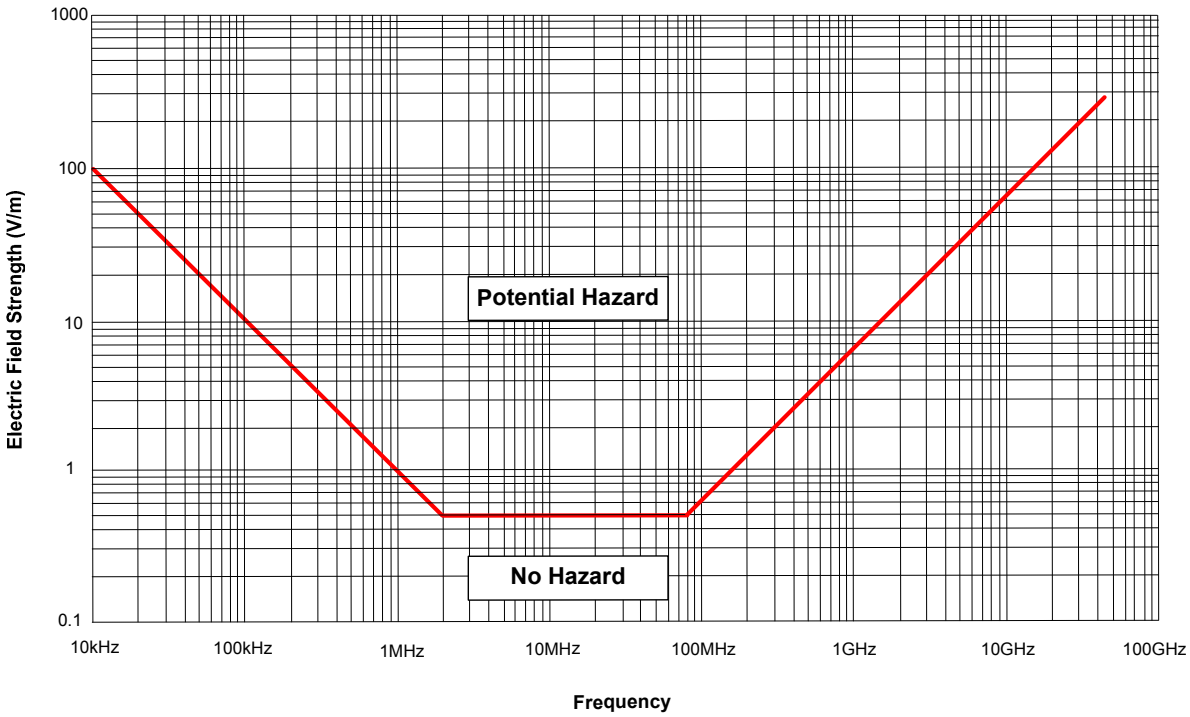

Figure 508/3 – A1 Potentially Hazardous Electromagnetic Field Strengths vs Frequency

Frequency Range (MHz)	Distance Equation
$0.01 \le f < 2.0$	$D = 5.5f\sqrt{P_tG_t}$ metres $D = 18f\sqrt{P_tG_t}$ feet
$2.0 \le f < 80.0$	$D = 10.95f\sqrt{P_tG_t}$ metres $D = 36f\sqrt{P_tG_t}$ feet
$80.0 \le f < 100000$	$D = 876f^{-1}\sqrt{P_tG_t}$ metres $D = 2873f^{-1}\sqrt{P_tG_t}$ feet

Where: D is the distance in the units designated.

P_t is the average power output of the transmitter in watts.

G_t is the numerical (far-field) gain ratio (not the dB value) of the transmitting antenna, derived as follows:

$G_t = 1 \times 10^{G/10}$ where G = gain in dBi, and f is the transmitting frequency in MHz.

Notes: 1) The information above represents "worst-case" conditions for safe distance required.

2) Equations are provided with the proper numerical multipliers to yield distances in either metres or feet.

Table 508/3 – A1
Equations for Computing Safe Field Strength/Distance for HERO UNSAFE Ordnance

A.5 SAFE FIELD STRENGTH/DISTANCE CALCULATION

The safe field strengths for the various frequency ranges for "HERO UNSAFE" ordnance are derived from **Figure 508/3-A1** and **Table 508/3-A1**. When using the HERO equations to determine a safe separation distance from any transmitter, it is the average power of the transmitter, the antenna gain as a numerical value, and the lowest operational frequency (for frequencies above 2 MHz) of the transmitter that should be used to calculate the safe separation distances.

NOTE: Calculations in this Annex provide a relatively accurate measure of the safe separation distances from the main beam of shore transmitters. They may be used as a guide for shipboard transmitters; however, the results do not allow for beam reflections, off main beam angles or near-field effects that may cause differences from those calculated. The only accurate gauge of shipboard safe distances is actual measurement data obtained through a HERO survey

A.6 Derivation of the HERO UNSAFE Curve

A.6.1 Right Hand Segment

The right-hand segment is theoretically based on a half-wave dipole antenna model. It assumes that for each frequency of concern the EID leads form a half-wave resonant dipole antenna (i.e. each EID lead is one-quarter of the wavelength). It also assumes that the antenna/transmission line impedance is matched to the EID bridgewire circuit impedance and that the transmission line loss is negligible (i.e. there is maximum transfer of energy from the antenna to the bridgewire).

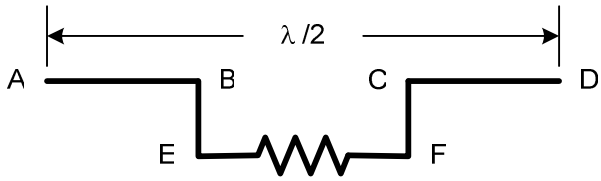

Figure 508/3 – A2 Half-Wave Resonant Dipole Model

The following equations are used to compute the "worst-case" MAE defined in terms of electric field strength (E):

$$E = \sqrt{(PD_{MAE} * Zo)} \qquad (6\text{-}1)$$

where:

E is the maximum electric field strength in volts root mean square per meter (Vrms/m)

PD_{MAE} is the maximum power density at the ordnance system/receive antenna in watts per square meter (W/m^2).

Zo is the intrinsic impedance of free space and is equal to 120π or approximately 377 ohms.

$$PD_{MAE} = (P_{MNFP}/A_e)*FCF \qquad (6\text{-}2)$$

where:

FCF is the firing consequence factor.

A_e is the antenna effective area in meters squared (m^2) and is defined as:

$A_e = (G_r * \lambda^2)/(4 * \pi)$ substituting for A_e in equation (6-2) results in the following:

$$PD_{MAE} =[(P_{MNFP} * 4 * \pi * I)/ (G_r * \lambda^2)] * FCF \qquad (6\text{-}3)$$

where:

P_{MNFP} is the Maximum No-Fire Power (MNFP) of the EID in watts (W)

G_r is the gain of a dipole antenna and is equal to 2.1 dBi or 1.64 gain ratio

l is the system loss which is negligible and assumed to be 1

λ is the wavelength (in meters) of the frequency defined by the following:

$$\lambda = c/f$$

f is the frequency in megahertz (Hz)

c is the speed of light in meters per second and is approximately 3×10^8.

For the "worst-case" curve, the position of the right- hand segment on the graph is fixed using a MNFP of 54 mW and an FCF of 0.0225 (16.5 dB); however, for a known ordnance system it will vary as a function of the MNFP sensitivity of the EID, the firing consequence factor, and the system's shielding effectiveness. The lower MAE limit of the right- hand segment is dictated by the middle segment and/or the physical dimension of the system.

A.6.2 Middle Segment

The middle segment was derived empirically using data obtained by all three services during the past 30 years of testing. An analysis of the data determined revealed that for all systems tested, the maximum energy coupled to an EID occurred in the high frequency (HF) range when testing a 2.75-inch rocket on a fixed wing aircraft during simulated loading operations. The 2.75-inch rocket contained one EID with a 300 mA MNFC and a 1.0 + 0.1 ohm bridgewire resistance. The rocket/EID uses a coaxial firing system design whereby the rocket case is the ground return path. When an aircraft is situated on a conductive surface (such as an aircraft carrier flight deck) in proximity to an active HF antenna, an extremely high energy potential can exist between the aircraft's outer skin and the deck. As a result, large amounts of EMR current can be coupled into systems that utilize a coaxial firing design, causing the EID to fire. The middle segment was established using a transfer function derived from this HF model and the 2.75- inch test data.

For the "worst-case" curve, the MAE value of the middle segment is fixed at 0.5 Vrms/m from 2-80 MHz, which is based on the 85 mA MNFC. However, for a known ordnance system, the MAE value will vary depending on the MNFC sensitivity of the EID of concern, the firing consequence factor, and the system's shielding effectiveness.

A.6.3 Left Hand Segment

The left-hand segment was derived both theoretically and empirically. As depicted in **Figure 508/3-A1**, the left-hand segment MAE increases as frequency decreases at a rate equivalent to 20 dB per decade of frequency. The lower MAE limit of the left-hand segment is bounded by the value of the middle segment. For the "worst-case" curve, the position of the left-hand segment on the graph is fixed; however, for specific ordnance systems it will vary depending on the resonant frequency as determined by 4 times the maximum physical length of the system.

CATEGORY 508: LEAFLET 4

LIGHTNING, MUNITION ASSESSMENT AND TEST PROCEDURES

1 AIM 508/4-4

2 APPLICABILITY 508/4-4

3 ASSESSMENT OF MUNITIONS AGAINST LIGHTNING EFFECTS 508/4-4

3.1 Introduction 508/4-4
3.2 Lightning Environment and Design Parameters 508/4-4
3.3 Aim of Lightning Protection Plan 508/4-4
3.4 Scope of Lightning Protection Document 508/4-4
3.5 Scope of Lightning Hazard Design Analysis 508/4-5
3.6 Lightning Test Waveforms 508/4-6
3.7 Test Plan and Schedule 508/4-6
3.8 Presentation of Documentation, Risk Analysis and Recommendations for Approval ... 508/4-6

4 EVALUATION OF THE HAZARDS CAUSED BY TRANSIENTS INDUCED ON THE WIRING OF MUNITIONS 508/4-7

4.1 Introduction 508/4-7
4.2 Evaluation Requirements when Modelling is Essential 508/4-7
4.3 Evaluation Requirements when Modelling is Not Essential 508/4-8
4.4 Margins to be Applied 508/4-9
4.5 Additional Evaluation Requirements for EIDs & FUZING Devices 508/4-9

5 EXPLOSIVES AND FUEL HAZARDS ASSESSMENT 508/4-10

5.1 Introduction 508/4-10
5.2 Evaluation Requirements 508/4-10
5.3 Mandatory Tests 508/4-11

6 LIGHTNING TEST METHODS 508/4-12

6.1 Introduction 508/4-12
6.2 Test Methods 508/4-12
6.3 General Test Requirements 508/4-12

7 APPLICABLE DOCUMENTS 508/4-15

7.1 Referenced 508/4-15
7.2 Information Only 508/4-15

8 ACRONYMS 508/4-15

ANNEX A DESIGN AND ASSESSMENT GUIDANCE FOR MUNITIONS 508/4-A1

ANNEX B INDIRECT EFFECTS HAZARDS ASSESSMENT GUIDANCE 508/4-B1

ANNEX C TECHNIQUES AND GUIDANCE FOR DIRECT EFFECTS TESTS 508/4-C1

ANNEX D TECHNIQUES FOR LEADER PHASE EFFECTS TESTS AND METHODS 508/4-D1

ANNEX E LIQUID EXPLOSIVE & FUEL – HAZARD ASSESSMENT AND DESIGN 508/4-E1

ANNEX F REQUIREMENTS FOR ENERGETIC MATERIAL HAZARD ASSESSMENT TEST, SOLID EXPLOSIVES 508/4-F1

ANNEX G TECHNIQUES FOR EQUIPMENT TEST 508/4-G1

ANNEX H GROUND ENVIRONMENT AND TEST METHODS FOR NEARBY FLASH 508/4-H2

FIGURES

Figure 508/4 – B1 Route to Compliance when Modelling is Necessary 508/4-B5

Figure 508/4 – B2 Various Levels Illustrated – TTL < CTL.....508/4-B6

Figure 508/4 – B3 Various Levels Illustrated TTL > CTL.....508/4-B7

Figure 508/4 – B4 Outline Test Arrangement for Weapon Classes A and D2 .....508/4-B11

Figure 508/4 – B5 Outline Test Arrangement for Weapon Classes B, C and D1 .....508/4-B11

Figure 508/4 – B6 Outline Test Arrangement for Free Flight Assessment.....508/4-B15

Figure 508/4 – C1 A Basic Quasi Co-Axial System 508/4-C1

Figure 508/4 – C2 Cross Section of a Three Conductor Quasi Co-Axial System around an Object of Complex Geometry 508/4-C2

Figure 508/4 – C3 Two Conductor System to Test a Composite Panel using a Metal Enclosure to Represent an Aerofoil Section 508/4-C2

Figure 508/4 – C4 Jet Diverting Electrodes 508/4-C3

Figure 508/4 – C5 Basic Circuit for a Lightning Generator.....508/4-C4

Figure 508/4 – D1 Diagram of the Set-up for Dielectric Puncture Tests.....508/4-D2

Figure 508/4 – G1 Curve Showing Typical Cable Bundle Current to Pin Voltage Transfer Function..... 508/4-G2

Figure 508/4 – G2 Current, Voltage and kVA Test Limits 508/4-G5

Figure 508/4 – G3 Damped Sinewave (DS) Test Waveform 508/4-G6

Figure 508/4 – G4 Monitor Loop Probe 508/4-G9

Figure 508/4 – G5 Typical Test Configuration..... 508/4-G11

Figure 508/4 – G6 Typical Test Configuration for CW Impedance Measurement..... 508/4-G12

Figure 508/4 – G7 Typical Test Configuration for Transient Injection..... 508/4-G12

Figure 508/4 – H1 Rolling Sphere to Determine Minimum Distance between Flash and Weapon without Attachment....508/4-H2

Figure 508/4 – H2 Test Arrangement for Magnetic Field Test....508/4-H7

Figure 508/4 – H3 Test Arrangement for Electric Field Tests....508/4-H7

TABLES

Table 508/4 – 1 Test Methods Approved for Use.... 508/4-13

Table 508/4 – 2 Test Applicability for Energetic Materials.... 508/4-14

Table 508/4 – C1 TEST 1 – Metal Burn Through....508/4-C6

Table 508/4 – C2 TEST 2 – Hot Spot Formation....508/4-C6

Table 508/4 – C3 TEST 3 – Arc Root Damage Tests for CFC Skins....508/4-C7

Table 508/4 – C4 TEST 4 – Arc Root Damage on Metal Sandwich Panels with Non Conducting Honeycomb Core....508/4-C7

Table 508/4 – C5 TEST 5 – Arc Root Damage on Thin Metal Sandwich Panels with Ablative Layer....508-C8

Table 508/4 – C6 TEST 6 – Arc Root Damage on CFC Sandwich Panels with Non Conducting Honeycomb Core with and without Ablative Layer....508/4-C8

Table 508/4 – C7 TEST 7 – Ohmic Heating Tests....508/4-C9

Table 508/4 – C8 TEST 8 – Magnetic Forces....508/4-C10

Table 508/4 – C9 TEST 9 – Acoustic Shock Wave Test....508/4-C11

Table 508/4 – G1 Limits for Maximum Peak Induced Current, Probe Loop Voltage Volt-Amp Product.... 508/4-G5

Table 508/4 – G2 Performance Specification for Transient Injection Probe.... 508/4-G7

Table 508/4 – G3 Primary Test Injection Frequencies.... 508/4-G10

Table 508/4 – H1 Value of Minimum Distance (d) for Various Weapon Heights....508/4-H2

CATEGORY 508-LEAFLET 4

Lightning, Munition Assessment and Test Procedures

1 AIM

The aim of this leaflet is to define the design risk assessment procedures and test methods to be used in determining the safety and suitability for service of munitions and associated systems exposed to the lightning environmental conditions given in AECTP 254 Ref [1].

2 APPLICABILITY

This leaflet shall apply to the assessment and testing of all weapon classes.

3 ASSESSMENT OF MUNITIONS AGAINST LIGHTNING EFFECTS

3.1 Introduction

This leaflet defines the requirements for the assessment and test of munitions and associated systems against lightning effects. The assessment shall be made by means of a Lightning Hazard Design Analysis (LHDA) which shall be part of a Lightning Protection Plan (LPP) as described below.

3.2 Lightning Environment and Design Parameters

The lightning threats for air, land and sea based weapons, for both design and test purposes, are defined in Ref [1].

3.3 Aim of Lightning Protection Plan

The purpose of the LPP is to ensure that the lightning hardness of munitions and associated systems to a direct strike to the weapon or associated launcher / launch platform are adequately addressed and demonstrated. When munitions have to survive only a nearby flash, suitable assessment shall be agreed with the National Authority. See **Annex H**.

The term ‘munitions and associated systems,’ shall be taken to mean the munition and all systems necessary for its launch and control. When the associated system is part of a platform (e.g. ship or aircraft) which has had a separate lightning hardness assessment performed, the LPP shall make reference to such assessments.

3.4 Scope of Lightning Protection Document

At the start of a project a LPP shall be prepared and presented to the National Authority. It shall be reviewed and amended as necessary during the life of the project. The LPP shall comprise:

a. An LHDA (see **Clause 3.5**).

b. A statement defining the general environmental conditions (climatic, mechanical and electrical) in which any lightning protection devices must be capable of operation.

c. The relevant Test Plans (TPs), if testing is required.

d. The relevant Test Schedules if test plans are prepared.

e. Reports of all tests made, with analysis, conclusions and recommendations (including a Risk Analysis if full protection has not been achieved).

f. Reference to assessments made, or to be made, within the platform.

3.5 Scope of Lightning Hazard Design Analysis

An LHDA shall be made and agreed with the National Authority early in the development of a project. It shall be a continuing process with revisions agreed by the National Authority as they become necessary.

The LHDA shall:

a. Clearly state the requirements for the lightning hardness of the weapon in terms of its ability to continue functioning during a strike, be operational after a strike or just remain safe during and after a strike. It shall also address the hardness requirements at each phase of a weapon life, (i.e. packaged, unpacked, loaded to launcher and where relevant in flight.

Note 1: The requirement shall be determined by the user and will normally be specified in the System Requirement Document (SRD)

Note 2: The extent of the analysis necessary will depend on the requirement. I.e. The following list assumes full functionality of the system is required during and after a strike)

b. Outline the general construction of the weapon, drawing attention to the use of insulating and partially conductive composite materials.

c. Provide a statement defining the likely lightning attachment points and current paths and the applicability of lightning zoning, together with a zoning diagram for the weapon. This shall draw particular attention to attachment points closely associated with explosives / fuel. An explanation of the term zoning will be found in Ref [1]

d. Identify any need for an assessment of the effects of a Nearby Flash on equipment not hardened against a Direct Attachment. See **Annex H**.

e. Survey the structure and note areas where specific lightning protection is required, such as those areas made of insulating or partially conductive material and especially insulating material in association with buried metallic materials.

f. Provide a criticality list of systems and equipment, including Electrically Initiated Devices (EID) probes, antennae and external sensors that might be affected by lightning under headings of ‘Safety’ and ‘Suitability for Service’. This list shall take account of those equipment circuits that are required to continue working during a strike; only remain operational after a strike and / or are not expected to be powered when weapon is at a risk of a strike.

g. Provide a statement defining the lightning design aim/test parameters appropriate to the different parts of the weapon according to the lightning zones ascribed to them based on Ref [1].

h. When a Nearby Flash assessment is necessary (see d. decide the distance (d) from the weapon then decide the appropriate design aim parameters, based on Ref [1], and the guidance given in **Annex H** concerning the determination of (d)).

i. Identify wiring that connects the critical systems and equipment and state the measures taken to protect it against Indirect effects.

j. Identify wiring where large common mode voltages could be developed in the structure and identify insulation which could be at special risk to voltage flashover, detailing measures taken to protect such wiring and prevent such flashover.

k. Include a lightning transient assessment which shall:

    1. Provide the evaluation detailed in **Clause 4**.

    2. Determine the additional Indirect Effects testing not covered by **Clause 4** on the complete weapon or parts of the weapon, to verify that induced voltage levels do not cause insulation breakdown or flash-over. The additional Indirect Effects testing

can be combined with the testing required by **Clause 4** and with Direct Effects Tests.

l. Include an explosives and fuel hazard assessment which shall, as appropriate, and as detailed in **Clause 5**:

   1. Provide an evaluation of systems containing solid explosives.
   2. Provide an evaluation of munition fuel and liquid explosive systems.
   3. Provide a similar evaluation for “dry bays” into which liquid explosive, fuel, or other hazardous liquid may leak. Particular attention shall be given to explosives / fuels which maybe affected by the thermal or shock effects of a direct attachment to their immediate containment.

m. Detail the actions taken to prevent exploding arcs occurring inside dielectric enclosures.

n. Draw attention to any specific lightning risks not covered by the above and the actions / tests taken to overcome them.

3.6 Lightning Test Waveforms

When lightning tests are determined to be necessary according to LHDA, the waveforms to be used for the tests shall be as prescribed in Ref [1].

3.7 Test Plan and Schedule

When tests are proposed by the LHDA, a TP shall be prepared in association with the Test House. The TP shall:

a. Detail the tests that are required.

b. Define the objectives for each test.

c. Outline the test methods including the lightning attachment points, the return conductor system and the lightning test waveforms to be used.

d. Define the number of samples to be tested and the number of simulated lightning discharges to be applied to each sample.

e. Detail the equipment to be used and the measurements to be made to:

   1. Provide evidence that the lightning test waveform is in accordance with the relevant waveform of Ref [1].
   2. Record the effects of the lightning simulation on the weapon/equipment under test.
   3. Observe the functioning and safety of the weapon/equipment during test.

f. Provide a Test Schedule which shall decide the order in which the tests shall be done and which (if any) shall be combined. The Schedule may be amended as the tests proceed.

3.8 Presentation of Documentation, Risk Analysis and Recommendations for Approval

The component parts of the LPP (LHDA, TP and Test Schedules) shall be presented to the National Authority for approval, at initial preparation and when significant changes are made. A risk analysis shall be made, if full protection has not been achieved. A final submission of the full LPP shall be presented to the National Authority when final agreement to the lightning protection is required.

4 EVALUATION OF THE HAZARDS CAUSED BY TRANSIENTS INDUCED ON THE WIRING OF MUNITIONS

4.1 Introduction

This Clause defines the requirements for evaluating the lightning transient protection of munitions. Rationale and guidance concerning these evaluations are given in this leaflet. These requirements have been defined on the assumption that the relevant equipments are required to operate during and following a lightning strike. Where this is not the case or where the circuits are not powered at the time of lightning threat, simplified analysis / testing will be possible. In such cases assessments and tests will only apply to circuits directly connected to EIDs and to fuel and explosive components. Moreover, where a system is to remain safe only and not necessarily survive, only those equipments/circuits that perform a safety function need to be considered. The description that follows defines a low risk route to specifying and verifying appropriate transient levels for each equipment in a weapon system which are then used to test that equipment. It is based on the procedure used for aircraft systems which are required to continue working and survive during a direct strike.

Note: They may not all be applicable to the weapon system.

4.2 Evaluation Requirements when Modelling is Essential

The requirements of this section shall apply where the weapon installation to be evaluated is too complex to allow all necessary Transient Control Levels (TCL) to be determined by measurement. See **Annex B**.

4.2.1 A continuing analysis shall be made as the project develops, using methods acceptable to the National Authority. A computer model of the weapon in its operating environment shall be made (which shall be updated as the project develops) for all attachment points and configuration scenarios to predict the full threat responses (bulk current, both damped sinewave and ground voltage) at all the equipment and cable bundles defined in **Clause 3**. Computed Transient Levels (CTLs) for those responses (damped sinewave and waveforms equivalent to Intermediate Pulse (IP), Short Pulse (SP) and Long Pulse (LP) waveforms) shall be decided accordingly.

Only those attachments and configurations that will give worst case coupling to the cables of interest need be considered.

Analysis and/or tests shall also be made to verify that equipment of air launched weapons can operate, without risk to safety or mission accomplishment, when the weapon is subjected to the Multiple Burst environment given in Ref [1].

4.2.2 The appropriate Equipment Transient Design Level, ETDLs, for equipment selected from previously tested equipment shall be decided by adding the agreed margin defined in **Clause 4.4** to the CTLs determined in **Clause 4.2.1**. At the earliest stages of the project the maximum levels given in Ref [1] for the installation categories determined from the analysis of **Clause 4.2.1**, shall be used for air side equipment. Levels for ground based and seaborne equipment shall be decided with the National Authority.

When it is necessary to test equipment the tests made shall be in accordance with tests defined in **Annex B Clauses B.7** and **B.8**. Any susceptibility shown by previous EMC testing shall be taken into account. The equipment shall not exhibit any malfunction, degradation of performance, damage or deviation from specification when subjected to pulses up to and including the test limits determined above. The level to which the equipment has been tested (or was previously tested) shall be declared as the Equipment Qualification Level (EQL).

4.2.3 A return conductor system shall be designed; using computational methods to ensure the weapon surface current distribution is as modelled in **Clause 4.2.1**. See **Annex B Clause B.7.4**.

4.2.4 Systems and cable runs on which to make pulse tests shall be selected and defined in the Test Plan. “Whole Weapon” Pulse Tests shall be made in accordance with the requirements defined in **Annex B Clause B.7** to provide Measured Transient Levels (MTLs) which shall be extrapolated to full

threat Test Transient Level (TTL) responses for each cable and measurement point defined in the Test Plan. For all weapon classes, full threat parameters shall be as prescribed in Ref [1].

4.2.5 Using the results obtained in **Clauses 4.2.1** and **4.2.4**, an assessment shall be made to confirm that there is linearity in the pulse measurements and to substantiate the cable resonances used for equipment tests as described in **Annex B Clause B.7**.

Taking due account of any non linearity, the analysis of **Clause 4.2.1** shall be validated by comparing the TTLs derived in **Clause 4.2.4** and the corresponding CTLs of **Clause 4.2.1**. If the difference between them is generally <6 dB, TCLs shall be decided by taking the appropriate worst case responses of all configurations and attachment points.

4.2.6 The margins defined in **Clause 4.4** shall be applied to the TCLs of **Clause 4.2.5** above and substantiated ETDLs decided.

4.2.7 When equipment tests have not previously been made, the equipment shall be tested in accordance with **Annex B Clause B.3.2** using ETDLs derived at **Clause 4.2.6**. Any susceptibility shown by previous EMC testing shall be taken into account. The equipment shall not exhibit any malfunction, degradation of performance, damage or deviation from specification when subjected to pulses up to and including the test limits determined below. The level to which the equipment has been tested (or was previously tested) shall be declared as the EQL.

4.2.8 When equipments have been selected or tested in accordance with **Clause 4.2.2**, a comparison shall be made between the TCLs in **Clause 4.2.6** and the relevant EQLs of the equipment under consideration. The difference between those levels shall be recorded.

4.2.9 Where the margins determined in **Clause 4.2.8** are less than the margins defined in **Clause 4.4** and unacceptable to the National Authority, either the equipment shall be redesigned to provide additional tolerance, or the installation shall be redesigned to lower the relevant TCLs. Any such redesign shall be verified by tests to be agreed with the National Authority.

4.2.10 If the whole weapon tests of Section **Clause 4.2.4** are made by agreement with the National Authority on a non-production weapon, some pulse tests, as agreed with the National Authority, shall be repeated on selected circuits of a production weapon.

4.2.11 It is generally not possible, for practical or economic reasons to make measurements on every cable bundle at every measuring point of interest. When that is so, reliance must be placed on analysis supported by measurements made on carefully selected cables and measuring points that will demonstrate the general validity of the modelling and analysis used, see **Annex B Clause B.3.4**.

4.3 Evaluation Requirements when Modelling is Not Essential

The requirements of this clause apply when the weapon installation to be evaluated is such that all necessary TCLs can be determined by measurements.

4.3.1 A continuing analysis shall be made as the project develops, using methods acceptable to the National Authority, for all attachment points and configuration scenarios given in **Clause 3** to define the likely installation categories for the equipment and cable bundles also defined in **Clause 3**.

4.3.2 Analysis and/or tests shall also be made to verify that equipment of Weapon Classes A and D2 can operate without risk to safety or mission accomplishment when the weapon is subjected to the Multiple Burst environment given in Ref [1].

4.3.3 The necessary ETDLs for previously tested or new equipment shall be the maximum levels given in Ref [1] according to the installation categories determined by the analysis as defined in **Clause 4.3.1**, for air side equipment. Levels for ground based and seaborne equipment shall be decided with the National Authority. Only equipment tested to **Annex G Clause G.5** and **G.6** shall be considered for selection. Suitable equipment not so tested shall be retested accordingly. When it is necessary to test equipment the tests made shall be in accordance with **Annex G Clause G.5** and **G.6**. Any susceptibility shown by previous EMC testing shall be taken into account. The equipment shall not exhibit any malfunction, degradation of performance, damage or deviation from specification when

subjected to pulses up to and including the test limits determined above. The level to which the equipment has been tested shall be declared as the EQL.

4.3.4 A return conductor system shall be designed using computational methods or other methods acceptable to the National Authority to ensure the weapon surface current distribution is as it would occur in the operating environment.

4.3.5 Systems and cable runs on which to make pulse tests shall be defined in the Test Plan. "Whole Weapon" Pulse Tests shall be made in accordance with **Annex B Clause B.7** to provide MTLs which shall be extrapolated to full threat TTL responses for each cable and measurement point defined in the Test Plan as described in this leaflet. Full threat parameters for dE/dt, di/dt and I_{pk} shall be as prescribed in Ref [1].

4.3.6 An assessment shall be made of the results of **Clause 4.3.5** to confirm that there is linearity in the pulse measurements as described in **Annex B Clause B.4.6** and to substantiate the cable resonances used for equipment tests. The TCLs shall be decided from the relevant TTLs determined in **Clause 4.3.5** taking account of any non linearity.

4.3.7 The margins defined in **Clause 4.4** shall be applied to the TCLs of **Clause 4.3.6** above and substantiated ETDLs decided.

4.3.8 When equipment tests have not previously been made, the equipment shall be tested in accordance with **Annex G Clause G.5 and G.6** using the ETDLs derived at **Clause 4.3.7**. Any susceptibility shown by previous EMC testing shall be taken into account. The equipment shall not exhibit any malfunction, degradation of performance, damage or deviation from specification when subjected to pulses up to and including the test limits determined below. The level to which the equipment has been tested should be declared as the EQL.

4.3.9 When equipments have been selected or tested in accordance with **Clause 4.3.3** a comparison shall be made between the TCLs in **Clause 4.3.6** and the relevant EQLs of the equipment under consideration. The difference between those levels shall be recorded.

4.3.10 Where the margins of **Clause 4.3.8** are less than the margins defined in **Clause 4.4** and are unacceptable to the National Authority, either the equipment shall be redesigned to provide additional tolerance, or the installation shall be redesigned to lower the relevant TCLs. Any such redesign shall be verified by tests to be agreed with the National Authority.

4.3.11 If the whole weapon tests of **Clause 4.3.5** are made by agreement with the National Authority on a non-production weapon, some pulse tests, as agreed with the National Authority, shall be repeated on selected circuits of a production weapon.

4.4 Margins to be Applied

Manufacturers shall agree with the National Authority on the margin to be applied in **Clauses 4.2** and **4.3**. The agreed margin shall take account of the confidence which can be attributed to the verification methods, the degree of variability expected from system to system and the criticality of the system concerned, so that the margin is decreased when the verification confidence is high and increased for highly critical systems. Where such margins cannot be agreed, they shall be 12 dB for 'Safety' and 6 dB for 'Suitability of Service'. See **Annex B Clauses B.3.1** and **B.3.5.3** for rationale.

4.5 Additional Evaluation Requirements for EIDs & FUZING Devices

4.5.1 Ensure in the analysis of **Clause 4.2** and **4.3** that an assessment is made of the induced voltage hazard to EIDs and fuzing devices. This shall consider both normal and abnormal function modes.

4.5.2 Identify the measures taken in the analysis of **Clauses 4.2** and **4.3**, to ensure and if necessary, demonstrate that fuzing and firing circuits cannot inadvertently operate as a result of a full threat lightning attachment to any part of the weapon.

5 EXPLOSIVES AND FUEL HAZARDS ASSESSMENT

5.1 Introduction

An evaluation of fuel and explosive hazards shall be made of systems containing solid and liquid explosives, liquid propellant and fuel systems. The over riding concerns are to ensure that lightning current will not penetrate the tank/skin and cause arcing or unacceptable heating, that the lightning current maintains a low impedance path (over the tank/skin volume) to a platform or system exit point, and that the lightning energy does not create a hot spot capable of igniting fuel or explosives.

5.2 Evaluation Requirements

5.2.1 A survey shall be made of systems containing solid explosives to identify:

a. The construction of cases and enclosures, including the type and thickness of skins enclosing explosives and any thermal insulation between the skin and explosives. In a partially conducting structure also survey the type and location of bolted joints and the location, relative to possible current flow, of any adhesively bonded joints.

b. The position of cases and enclosures relative to lightning strike zones.

c. The location and method of installation of wiring and wiring conduits, within and external to the enclosures.

d. The type and location of access doors and covers.

e. The size of any conductors which could carry lightning current and which of necessity pass through the explosive (see **Clause 5.2.5**).

f. The location of all possible sites of thermal and voltage sparking.

5.2.2 A survey shall be made of liquid explosive, liquid propellant and fuel systems to identify:

a. The construction of tanks (integral and external) for fuel or liquid propellant and containers for explosives. This shall include the type and thickness of skins and any thermal insulation between the skin and explosives and in a partially conducting structure the type and location of bolted joints and the location, relative to possible current flow, of any adhesively bonded joints.

b. The position of tanks and containers for explosives, relative to lightning strike zones.

c. The type, location and method of installation of propellant or fuel and pressurisation pipes, within and external to propellant and fuel tanks.

d. The location and method of installation of wiring and wiring conduits, within and external to tanks; and the size of any conductors which could carry lightning current and which are of necessity in contact with liquid propellant or fuel (see **Clause 5.2.5**).

e. The type and location of access doors and covers.

f. The location of all possible sites of thermal and voltage sparking.

5.2.3 Identify any hotspots and the measures taken to prevent unacceptable temperatures

5.2.4 With respect to structure skin in which explosives or fuel (or fuel vapour) are present:

a. Identify for Weapon Classes A and D2 the location of any solid aluminium skin in Zones 1A and 2A less than 2 mm thick and identify the measures used to protect those skins.

b. Determine the minimum thickness allowable for solid aluminium skins for Weapon Classes A and D2 in Zones 2A and 2B and for all other weapon classes.

c. Determine the minimum thickness allowable for steel and titanium skins.

d. Identify any Carbon Fibre Composites (CFC) skins which are thinner than 5 mm and the measures taken to protect them.

e. Identify the protection given to other construction which would otherwise be at risk, such as:

1 Sandwich panels made either from conducting, non-conducting or partially conducting materials, or a mixture of such materials.

2 Solid dielectric skins.

5.2.5 Identify the measures taken to prevent the passage of lightning current inside a structure containing explosives or fuel, or through a component of an explosive or fuel system. Where such current flow cannot reasonably be eliminated, identify the measures taken to prevent a hazard.

5.2.6 Identify joints and fasteners and the measures taken to prevent sparking.

5.2.7 Identify adhesively bonded joints and measures taken to prevent current flow through them.

5.2.8 Identify the measures taken to prevent current flow in pressurisation and liquid propellant or fuel pipes or alternatively in aluminium structures identify the bonding used to limit current flow through couplings.

5.2.9 Determine, by analysis and/or test, the value of possible flash-over or insulation breakdown voltages which may occur inside fuel or explosive systems (including in any wiring/piping).

5.2.10 Establish that fuel or explosive system electrical components meet the recommendations of this leaflet and can withstand the voltages determined in **Clause 5.2.9**. Also establish that sparking and flashover cannot occur in any part of the fuel and liquid propellant system wiring in contact with fuel or liquid propellant or vapour from fuel or liquid propellant.

5.2.11 Identify the measures taken to ensure and if necessary, demonstrate that EIDs are not at risk from a full threat lightning attachment to any part of the weapon.

5.2.12 Identify the measures taken to ensure and if necessary, demonstrate, that percussion detonators and piezo devices are not at risk from a full threat lightning attachment to any part of the weapon.

5.2.13 Determine the testing that is necessary to verify compliance with the above and to meet the requirements of **Clause 5.3** for the following elements:

a. On panels, components, and sections of assemblies and structure (additional to that required in **Clause 5.2.9**). Where electrical bonding between panels and across joints is required to demonstrate hardness appropriate test limits and tests for each joint/bond shall be specified and undertaken.

b. On complete major assemblies, such as liquid propellant and fuel tanks, rocket motor cases and enclosures for explosives.

5.2.14 When tests are required they shall be selected according to material classification of **Table 508/4-2**.

5.2.15 Clearance for fuel systems is based on the elimination of all sparking, both voltage and thermal. Detection methods for voltage sparking possess sensitivity down to 0.2 mJ or better. See **Annex E Clause E.3.3** Information concerning sensitivity levels of explosives shall be derived using STANAG 4170 Ref [2] or be specifically determined for liquid propellants.

5.3 Mandatory Tests

Tests shall always be carried out in the following cases:

a. When it cannot be demonstrated by comparison with previously accepted systems or by analysis that sparking, arcing, arc penetration and hotspots have been eliminated.

b. When there is doubt that sparking tests (see **Annex E Clause E.5.3**) on panels or sections will be unrepresentative of full scale conditions regarding current density and distribution,

and induced voltage levels (and hence the number and position of sites of possible sparking), tests on major assemblies shall be made. When there is doubt that such tests will not reveal the presence of all the sparking, or that there may be small hot spots not evaluated by **Table 508/4 – C2** in **Annex C**. Whole System Tests or Flammable Gas Tests shall be made in accordance with **Annex E Clause E.5.4.**

c. When it is impossible to establish by measurement of induced voltage levels and analysis, or comparison with previously accepted systems, that sparking and flash-over in fuel or explosive system wiring will not occur, a test shall be designed to establish that such a hazard is not present. Unless otherwise agreed with the National Authority the test shall be made on a major assembly and may be either a sparking test (see **Annex E Clause E.5.3**), a Flammable Gas Test (see **Annex E Clause E.5.4**) a Part System, or a Whole System Test (see **Clause 5.3e**). When such tests are made the full threat induced voltage values shall be simulated.

d. When it is impossible to establish by measurement of induced voltage levels and analysis, or comparison with previously accepted systems, that EIDs are not at risk, a test shall be designed to establish that such a hazard is not present.

e. A Part System Test or a Whole System Test shall always be made on the complete weapon, in accordance with the requirements of Annex F when it cannot otherwise be established that there is not a hazard to explosives and EIDs. When a Part System Test is used, it must be shown that such a test is sufficient to evaluate the hazards.

6 LIGHTNING TEST METHODS

6.1 Introduction

The test methods available for inclusion in the TP, when testing is determined to be necessary by the LHDA are defined here.

6.2 Test Methods

Test Methods shall be selected from those given in **Tables 504/4–1** and **508/4–2** according to the interaction effects and damage mechanisms under investigation. All tests may be used for the assessment of damage and effects due to Direct Attachment but only those marked with an asterisk are relevant to Nearby Flash Assessment.

6.3 General Test Requirements

The following requirements shall apply:

a. All tests shall be made at a Test House approved by the National Authority.

b. Evidence shall be available to the National Authority that all diagnostic and measuring devices have been calibrated in accordance with recognised engineering practice, or by calculation from basic principles, to a standard of accuracy commensurate with the precision required of the test.

c. Unless otherwise noted the test waveforms shall be as defined in Ref [1]. Waveforms to obtain a Nearby Flash environment shall be determined as noted in **Annex H**.

d. The test item for the tests described in **Annex A** shall be arranged in a co-axial or quasi co-axial return conductor system, as detailed in the relevant test. Guidance concerning the design of return conductor systems is also given in **Annex A**.

e. The test item shall normally be production or equivalent development hardware. Alternatively an electrically representative simulation of the production configuration may be used if acceptable to the National Authority.

f. Variations to the test methods shall only be made by agreement with the National Authority.

EFFECTS CLASSIFICATION	TEST METHOD	
	TITLE	TEST REFERENCE
DIRECT EFFECTS	Metal Burn Through	**Table 508/4–C1**
	Hot Spot Formation	**Table 508/4–C2**
	Arc Root Damage to CFC Skins	**Table 508/4–**C3
	Arc Root Damage to Metal Sandwich Panels with Non Conducting Honeycomb Core	**Table 508/4–C4**
	Arc Root Damage to Thin Metal Sandwich Panels with Ablative Layer	**Table 508/4–C5**
	Arc Root Damage to CFC Sandwich Panels with Non Conducting Honeycomb Core with and without Ablative Layer	**Table 508/4–C6**
	Ohmic Heating	**Table 508/4–C7**
	Magnetic Forces	**Table 508/4–C8**
	Acoustic Shock Wave	**Table 508/4–C9**
INDIRECT & NEARBY EFFECTS ON WHOLE WEAPONS	Pulse Tests	**Annex B**, **Clause B.7.5*** Levels in Ref [1] Annex B
INDIRECT & NEARBY EFFECTS ON PARTS OF WEAPONS	Induced Voltage Measurements	**Annex B Clause B.8.9***
	Insulation Integrity Test	**Annex B Clause B.8.10***
INDIRECT & NEARBY EFFECTS ON EQUIPMENT	Pulse Test	**Annex B Clause B.3**
	Damped Sinewave injection tests	**Annex G Clause G.5***
	Ground Voltage Injection Tests	**Annex G Clause G.6***
	Multi burst, weapon classes A and D1 only	**Annex G Clause G.6.3*** Waveform as in Figures 3 and 4 of Ref [1]
INDIRECT & NEARBY EFFECTS TO WEAPON COMPLEXES (WEAPON CLASS B)	It is not considered feasible to define generic tests for these effects	
LEADER PHASE EFFECTS	Dielectric Puncture Tests	**Annex D**
DIRECT & INDIRECT EFFECTS THAT MAY AFFECT EXPLOSIVES AND FUEL	See **Table 508/4–**2	See **Table 508/4–2**

Table 508/4 – 1 Test Methods Approved for Use

* Applicable for Nearby Flash Assessment

TESTS		FUEL LIQUID PROPELLANT SYSTEMS, LIQUID EXPLOSIVES BULK MATERIAL	SOLID EXPLOSIVE SYSTEMS INCLUDING SOLID PROPELLANTS				
			CONDITION 1 Note 1	CONDITION 2 Note 2	CONDITION 3 A Note 3	CONDITION 3 B Note 3	ALL CONDITIONS Note 5
			BULK MATERIAL	BULK MATERIAL	BULK MATERIAL	BULK MATERIAL	IGNITORS& FUZES & DETS
TITLE	REFERENCE						
Arc Root & other Direct Effects Tests	**Annex C Tables C1-C9**	X	X	X			X – Note 4
Sparking Test	**Annex E Clause E.5.3**	X	X	X			
Flammable Gas Test	**Annex E Clause E.5.4**	X	X	X			
Induced Voltage Measurement	**Annex B Clause B.8.9**						X
Insulation Integrity	**Annex B Clause B.8.10**						X
Requirement Part System Test	**Annex F Clause F.5**						X
Requirement Whole System Test	**Annex F Clause F.4**				X		X
Whole System Test	**Annex F Clause F.3**					X	X

Table 508/4 – 2 Test Applicability for Energetic Materials

Notes: 1 Condition 1 Explosives (including solid propellant) removed, including ignitors, and detonators (or made inert) without change to sparking or electrical characteristics.

2 Condition 2 Explosives (including solid propellant) removed but ignitors, and detonators remain to preserve sparking and electrical characteristics.

3 Condition 3 Explosives (including solid propellant) and ignitors, and detonators in situ to preserve sparking and electrical characteristics:

A - Only sufficient explosives in situ just to give a reaction.

B - All explosives in situ if sparking and electrical characteristics cannot otherwise be preserved.

4 If required to, evaluate magnetic force, and shock effects on percussion and piezo devices.

5 Electrical initiated ignitors and detonators will normally be tested using instrumented devices to measure pin to pin and pin to case currents / voltages in a complete inert system. Go / no-go tests at full threat level on a complete system using live ignitors / detonators may sometimes be necessary.

7 APPLICABLE DOCUMENTS

7.1 Referenced

Ref 1 AECTP 250 Series Leaflet 254 ATMOSPHERIC ELECTRICITY AND LIGHTNING

Ref 2 STANAG 4170 – Principles and Methodology for the Qualification of Explosive Material for Military Use

Ref 3 BS 923-1: 1990. IEC 60-1: 1989, High Voltage Testing Techniques

Ref 4 BS EN 62035-3: 2006 Protection Against Lightning Part 3: Physical Damage to Structures and Life Hazards

7.2 Information Only

AAP 55 NATO E3 Glossary of Terms and Definitions

AOP 38 Glossary of Terms and Definitions concerning the Safety and Suitability for Service of Munitions, Explosives and Related Products

8 ACRONYMS

The following acronyms used in this leaflet are:

CFC Carbon Fibre Composite

CTL Computed Transient Level

CW Carrier Wave

DS Damped Sinewave

EID Electrically-Initiated Device

EMC Electromagnetic Compatibility

EQL Equipment Qualification Level

ETDL Equipment Transient Design Level

FOL Fibre Optic Link

HF High Frequency

IP Intermediate Pulse

LHDA Lightning Hazard Design Analysis

LP Long Pulse

LPP Lightning Protection Plan

MIE Minimum Ignition Energy

MTL Measured Transient Levels

SP Short Pulse

TCL Transient Control Level

TP Test Plan

TTL Test Transient Level

UUT Unit Under Test

ANNEX A

DESIGN AND ASSESSMENT GUIDANCE FOR MUNTIONS

A.1 NEED FOR TESTING

The essence of the LHDA/LPP is that the assessment shall be made by an analysis of the design. That analysis will normally be achieved by means of calculation and modelling, comparison with known acceptable design and methods of protection and by comparison with previously approved systems; supplemented, where and when necessary, by testing in accordance with the methods of **Clause 6**. The LHDA must therefore identify the need for testing, and when testing is necessary a TP must be prepared in accordance with the requirements of **Clause 3**.

Testing without a formal TP may also be required on component parts and materials to obtain performance information as a design and development aid and to assist in the selection of suitable components and materials. When such development testing is done it may, under certain circumstances, be offered to the National Authority as part of the testing required by the formal LHDA.

A.2 TEST PLAN, TEST SCHEDULE AND TEST REPORT

The Test Plan is intended to be a comprehensive document which clearly defines why the tests are being made, how they are to be made and what measurements are to be taken. It is, in effect, a test proposal, made in collaboration with the Test House, from which a Test Schedule (TS) would be prepared which is then included in the plan. The Test Schedule would detail in which order the tests are to be run and which (if any) tests are to be combined, and would allow, by agreement with the National Authority, deviations from the order of test as dictated by information obtained as the tests progress.

The Test Report would include the final TP and TS, together with results of the tests, including raw data, with all analysis leading to conclusions and any recommendations for further testing or redesign.

A.3 FACTORS AFFECTING TEST SAMPLES

When deciding the number of samples to be tested and the number of shots per sample, it should be remembered that the repeated passage of high current across joints reduces the tendency for that joint to spark. This is known as conditioning. If several shots are made to one sample this should be borne in mind. For tests which involve both conduction and attachment shots the conduction shot should be carried out first.

The number of test samples is usually limited and generally more than one test will need to be made on each sample (token testing). Care must therefore be taken to arrange the order of tests so that if damage should result from an early test, the sample is still suitable for the tests that follow. This also applies when the protection given to a weapon is sufficient for it to survive only one strike.

A.4 TEST COMBINATIONS

When more than one damage mechanism is being investigated, it is sometimes possible to combine the requirements of several tests in a single test, provided that the individual test requirements are met. For example, it is permissible to conduct magnetic force tests, whilst other tests are being made that involve test currents having a high action integral, provided that the relative waveform requirements are satisfied. Similarly, it is also permissible to run Direct Effects and Indirect Effects tests together.

A.5 ENERGETIC MATERIAL HAZARD ASSESSMENT TESTS

Lightning effects to energetic material are explained in **Annex B Clause B.1**. Energetic material hazard assessment tests are given in **Annexes G** and **H**. Those tests in **Annex G** are based on the tests for aircraft fuel systems used in **Annex H** and include a 'Whole System Test' (both Part Live and Complete) and a 'Part System Test'.

The former is intended to be used when there is no other way of demonstrating that a weapon is free from hazard, and would be made on a complete weapon with propellant and explosives, together with detonators and fuzes in situ to preserve sparking and electrical characteristics. Because of the necessity of surrounding the weapon in a blast-proof enclosure and providing special portable lightning generators, this test is to be avoided whenever possible. Although if a Part Live Whole System Test can be made the problems of such testing can be eased. A Part Live Test may be made when the majority of the energetic material (warhead or propellant) can be removed without altering the electrical characteristics, leaving just sufficient explosive to provide a reaction. As the results of the tests must be examined statistically, little confidence can be given to the fact that one test sample survives a test threat.

As noted above, a Whole System Test should only be made as a last resort and when the preparation of a special round with explosives and detonators removed would invalidate the electrical characteristics of the weapon and the arc root, Sparking and Flammable Gas Tests would otherwise be contemplated.

An example of when a Whole System Test would be required, either Complete or Part Live, would be if a hot spot could ignite bulk materiel but the temperature of the hot spot which would ignite was not known. Or again, if sparking within the bulk materiel could ignite and there was no means of showing that such sparking could not occur.

The Part System Test is intended to be used when the explosives/propellant can be removed without invalidating the electrical characteristics but when for similar reasons the fuzes/detonators have to be in place. Similar considerations to the above apply to the Part System Test except that the cost of repeated testing would generally be limited to that of replacing fuzes or detonators (in addition to the repeated Test House costs for each test required).

Special considerations when tests involve EIDs include the following:

a. When instrumenting EIDs to monitor pin-to-pin and pin-to-case induced currents, the data transmission system used between instrumented devices and their recording equipment should not change the electrical characteristics relating to the EID or induce spurious signals in the EIDs. This is commonly accomplished by using fibre optic or microwave assemblies to transmit data between the EID under test and the remotely positioned recording instrumentation. Alternatively, data can be brought out via well-shielded coaxial lines through connectors in the weapon skin. It is important to ensure that no instrumentation induced errors occur during testing

b. When it is not possible to place measuring systems inside the munition or weapon system and when it is required to assess one or both pin to pin and pin to case mode effects of live EIDs, the resistance of each EID shall be recorded prior to and after each lightning test.

c. The number of tests needed depends on whether EIDs are live or instrumented. When tests are conducted with instrumented EIDs, a minimum of three test sequences is required. A test sequence is defined as a series of pulses for a given configuration of the munition or weapon system.

ANNEX B

INDIRECT EFFECTS HAZARD ASSESSMENT GUIDANCE

B.1. INTRODUCTION

This Annex gives Assessment and Test Guidance concerning the evaluation of the level of protection for weapons against hazards arising from Lightning Indirect Effects.

Clause B.2 describes coupling mechanisms, **Clause B.3** the philosophy of clearance, whilst **Clauses B.4** and **B.5** discuss Indirect Effects tests as applied to whole and part weapons respectively. **Clause B.6** gives guidance concerning Indirect Effects tests to evaluate possible flashover voltages.

B.2. SUMMARY OF INDIRECT EFFECTS MECHANISMS

Indirect Effects are those due to coupling with the magnetic or electric field of the lightning current flowing in the weapon or in the lightning channel itself. They can arise therefore as a result of a direct strike, a nearby flash or a distant flash. The principal effect is that currents are induced on the weapon surface resulting in currents and voltages in the interior wiring. The amplitude of the latter will depend on the electro-magnetic shielding afforded by the surrounding structure. Thus electronic equipment is likely to be subjected to transients, which may cause malfunction or possibly permanent damage if not adequately protected.

Essentially, a transient voltage is injected into the weapon wiring and the current that flows depends on the impedance of the circuit. Direct penetration of transient fields into equipment is usually not important because the grounded case affords good shielding against both magnetic and electric fields. The transient voltage waveforms injected into the wiring are often very complex but usually consist of one or more of four components.

B.3 WEAPON CLEARANCE

B.3.1 General Considerations

There is a school of thought which says that there should always be a full threat upset test, either on a system rig with multi-point injection, or preferably during a whole weapon pulse test. With regard to the latter preference it is argued that only by testing the weapon at full threat will the correct environment due to lightning occur, with appropriate amplitude and phase of voltages and currents on cables and electromagnetic fields in equipment bays.

The opposing view is that even that type of test cannot reproduce the actual excitation that occurs in practice (for reasons that are too complicated to explain here due to the complexities of natural lightning) and that all the variables and imponderables can be swept up in an adequate margin. This margin is applied between levels obtained from successfully validated analysis and the bench test levels to which equipment is cleared. This leaflet adopts the latter position and requires a margin to be agreed with the National Authority. This margin is lower for “high confidence verification methods” and higher for “lower confidence methods” or if the criticality of the system is high. If such agreement cannot be reached, the margins must be 12 dB for ‘Safety related’ (for example, firing circuits and propulsion) and 6 dB for ‘Suitability for Service’ where safety is not an issue.

B.3.2 Definition of Levels

The terms used to describe Weapon and Equipment Transient Levels are given in the Definitions.

Instead of TCL the Civilian Standards would use Actual Transient Level (ATL) which is defined as follows:

ATL is the level of transient voltage and/or current, which appears at the equipment interfaces as a result of the external environment. This level may be less than or equal to the TCL but should not be greater.

It should be noted that there maybe several possible ATLs for a single equipment interface depending on how the lightning attaches to the vehicle and the configuration of the vehicle. The Civilian definition says nothing about enveloping these together and taking the worse case as the TCL. Hence the definitions for TTL and TCL used in this leaflet have been especially developed.

B.3.3 Assessment Applicability

This leaflet assumes that only new installations will require assessment. If an existing installation must be assessed the requirements of **Clause 4** must be modified accordingly. It is assumed that the assessment of a new project starts at the design stage and that the new weapon will eventually have 'off the shelf' or new design equipment fitted to it, which may be qualified before pulse tests are made.

As noted in **Clause B.3.1**, weapon installations will generally be too complex to assess by measurement alone and modelling substantiated by testing must be done. There will be simplistic weapons however where modelling is not required.

The high frequency (HF) content of predictions from modelling cannot be expected to have high accuracy. Although the frequencies will be correct, their amplitudes will be different from those that occur in practice. This is because the lightning waveform for analysis purposes is taken to be a double exponential, which departs from reality in two main ways:

a. First, there are many spikes and rapid changes in real lightning, especially during the leader phase, and because these are not contained in the double exponential waveform, they will tend to make the true HF content more severe than in predictions.

b. Secondly, the double exponential waveform departs from the shape of a typical return stroke because an immediate 'turn-on' is assumed, thus emphasising the HF energy at the start (leading edge) of the waveform because di/dt attains its maximum value at time zero. In contrast, the real lightning return stroke waveform typically has a slow turn-on; the rate of rise is initially zero and gradually increases to a maximum just before the peak current. For this reason the assumption of a double exponential makes the prediction of HF more severe than the reality.

Because these two factors operate in opposite directions, estimates of the HF (damped sinewave) responses have to be made with great care when deciding TCL's.

B.3.4 Assessment Requirements

A summary of the steps to compliance (using routes A, B C or D) are given as a flow chart in **Figure 508/4–B1**. **Figures 508/4–B2** and **508/4–B3** are histograms illustrating the relationship of the various levels.

B.3.4.1 When Modelling is Essential

When modelling is essential, the Assessment should be made as follows:

a. Survey the likely installation and revise as the project develops to decide systems of interest, and hence cable runs of interest.

b. Decide attachment points likely to cause maximum coupling to system cables of interest.

c. Model the weapon and systems etc. of interest at full threat for all worst case attachment points as defined in (b) and for the configuration scenarios given by (a) and review as the Project develops. Predict likely bulk cable current responses at equipments of interest for Damped Sinewave (DS) and the waveforms equivalent to Intermediate Pulse (IP), Short Pulse (SP) and Long Pulse (LP) and decide the CTLs accordingly.

d. Decide ETDLs for selection/initial testing of equipment by:

    1. Adding the agreed margin to the CTLs, or

    2. When it is too early in a project for the modelling of (c) to have been done default levels should be chosen. If a rough idea of the likely location and disposition of equipment and wiring is known an appropriate ETDL may be selected using the

categories and levels given in Ref [1]. This value of ETDL may need to be revised as data becomes available.

e. Select or test equipment as appropriate by:

   1. Choosing from previously tested equipment qualified to a level at least as high as the ETDL of d 1, or if modelling not yet done from equipment qualified at the level of d 2.

   2. Testing new equipment to the levels given by d 1 or d 2 as appropriate.

The level to which the equipment has been tested shall be declared as the EQL.

f. Design a return conductor system, using computational or other methods acceptable to the National Authority, to give the weapon surface current distribution that would occur in the operating environment.

g. Select system and cable runs on which to make pulse tests, choosing cases where modelling has a high confidence and where modelling may be in question.

h. When the weapon is available apply the pulse tests and obtain the MTLs. Analyse the waveform, extract each of the waveform components for DS, SP, IP and LP response that are present in the measured waveform.

i. Extrapolate MTLs to full threat to give TTLs.

j. Compare TTLs of (i) with corresponding CTLs of (c). If the difference between them is generally <6 dB decide TCLs by taking appropriate worst case responses of all configurations and attachment points considered in (c) & (i). (If the margin between corresponding CTLs and TTLs is greater than 6dB the reason should be investigated and appropriate action taken to resolve the differences).

k. Add the agreed margin as defined above and decide with substantiation ETDLs necessary for all equipment.

l. Test any equipment not qualified at (e) to the substantiated ETDLs derived in (k).

m. Compare TCLs of (j) with the EQLs of (e) and note margins.

n. For any equipment where the margins given by (m) are less than the agreed margin then:

   1. Redesign and retest equipment to provide the necessary margin, or

   2. Harden the installation to give a lower TCL and prove that the modified TCL gives the necessary margin.

B.3.4.2 When Modelling is not essential

a. Survey the likely installation and revise as the project develops to decide systems of interest, and hence cable runs of interest.

b. Decide attachment points likely to cause maximum coupling to system cables of interest.

c. Decide likely installation categories for each, equipment according to Ref [1].

d. To enable previously tested equipment to be selected or newly developed equipment to be tested, assume the ETDLs will be those given in Ref [1].

e. Select or test equipment as appropriate by:

   1. Choosing from previously tested equipment qualified to a level at least as high as the ETDL of (d) or

   2. Testing new equipment to the appropriate level given by (d).

The level to which the equipment has been tested shall be declared as the EQL.

f. Design a return conductor system, using computational or other methods acceptable to the National Authority, to give the weapon surface current distribution that would occur in the operating environment.

g. Select system and cable runs on which to make pulse tests.

h. When the weapon is available apply the pulse tests and obtain the MTLs. Analyse the measured waveform. Extract each of the waveform components for DS, SP, IP and LP response that are present in the measured waveform. Extrapolate MTLs to full threat to give TTLs.

i. Assess the results of (h) to substantiate cable resonances, taking into account any non linearity. Correct TTLs to derive new TCLs.

j. Add agreed margin and decide substantiated ETDLs necessary for all equipment.

k. Compare TCLs of (i) with the EQLs of (e) and note margins.

l. For any equipment where the margins given by (k or i) are less than the agreed margin then:

    1. Redesign and retest equipment to provide the necessary margin, or

    2. Harden the installation to give a lower TCL and prove that the modified TCL gives the necessary margin.

B.3.4.3 Summary

It will be noted that there can be two sets of ETDLs for the same equipment interface. Namely those used to select or initially test equipment before pulse tests are done and those which are derived from the TCLs which follow after the pulse tests are made. These two sets of ETDLs may not have the same value.

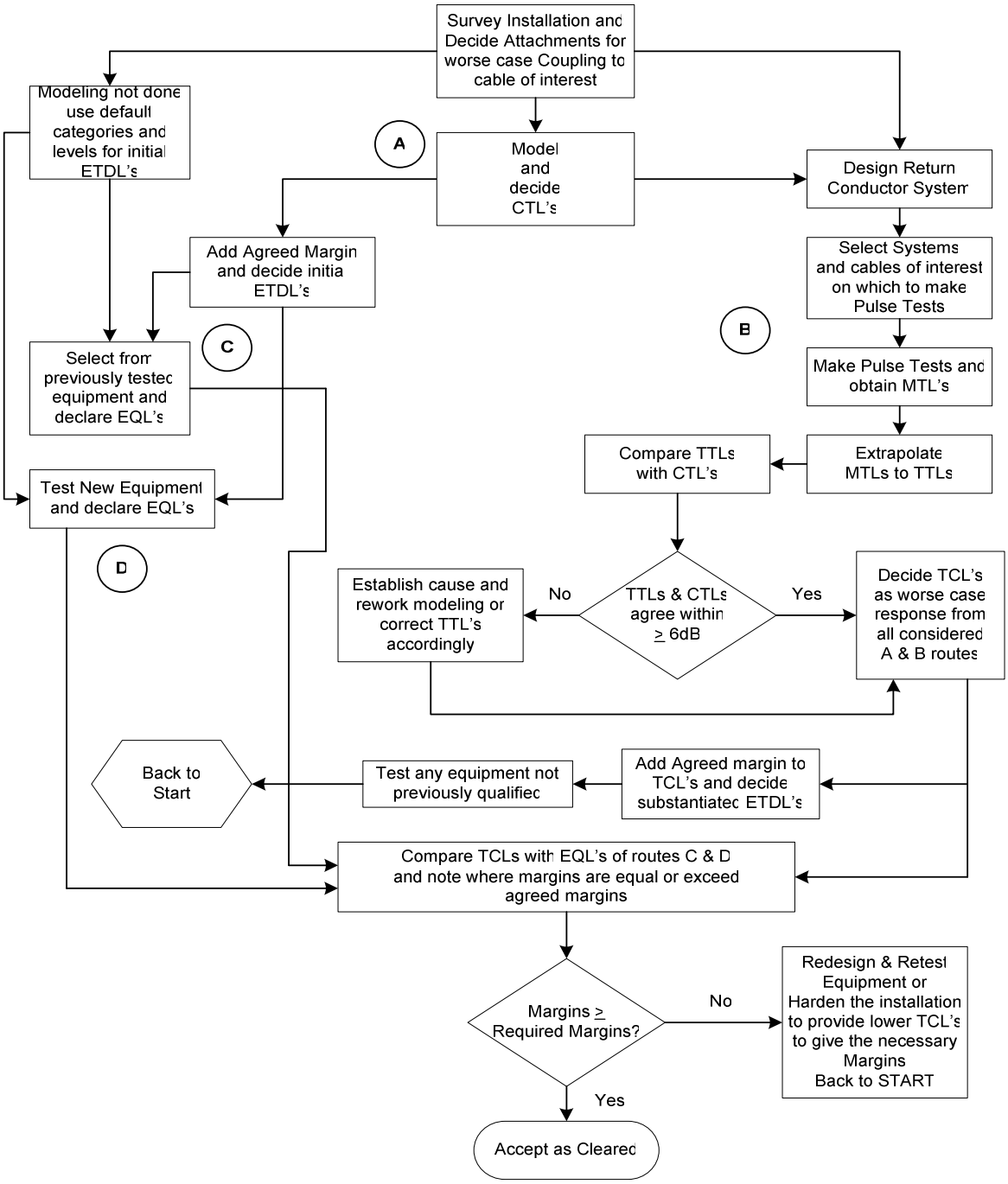

Figure 508/4 – B1 Route to Compliance when Modelling is Necessary

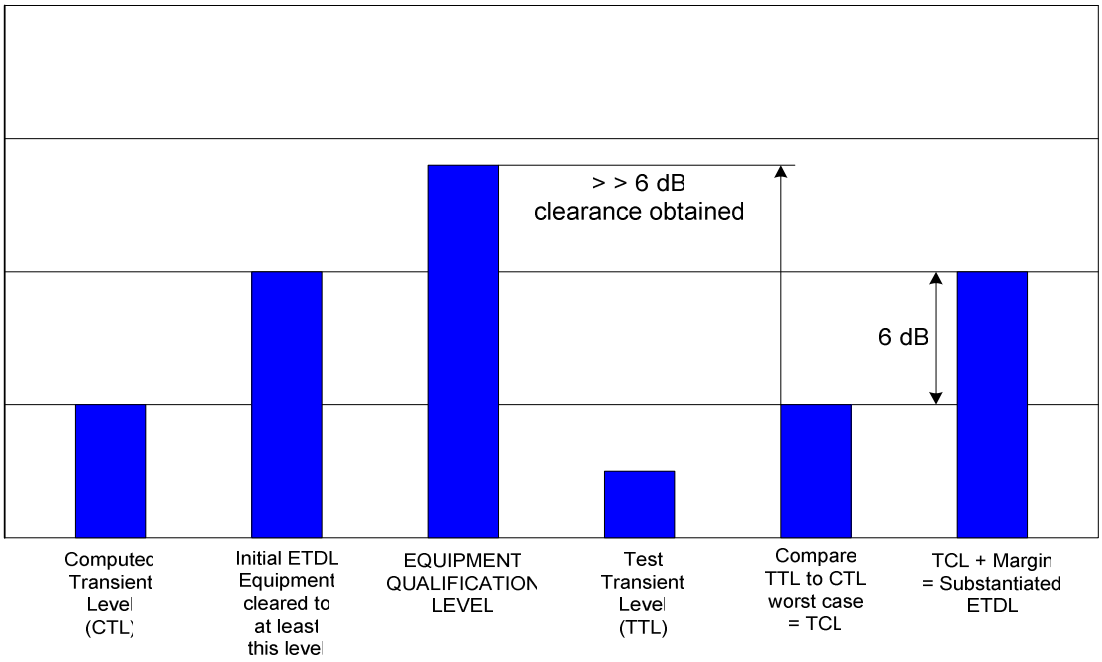

The TTL is lower than the CTL, therefore CTL is used as TCL and margin added to give substantiated ETDL, which is lower than equipment qualification level so clearance is obtained

Figure 508/4 – B2 Various Levels Illustrated – TTL < CTL

Clearance obtained without change to equipment qualification or design

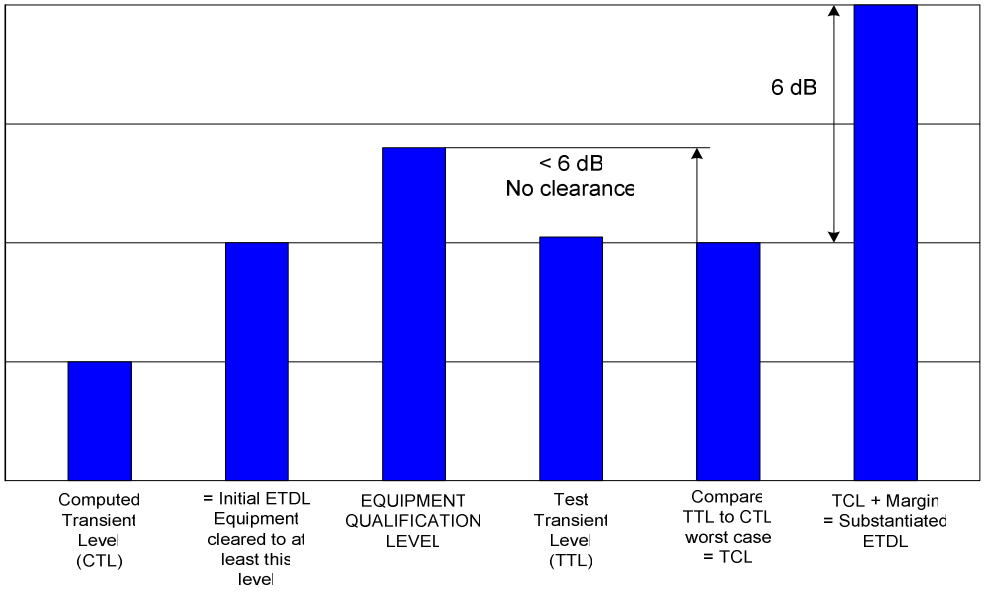

The TTL is higher than the CTL, therefore TTL is used as TCL and margin added to give substantiated ETDL, which is greater than equipment qualification level so No Clearance

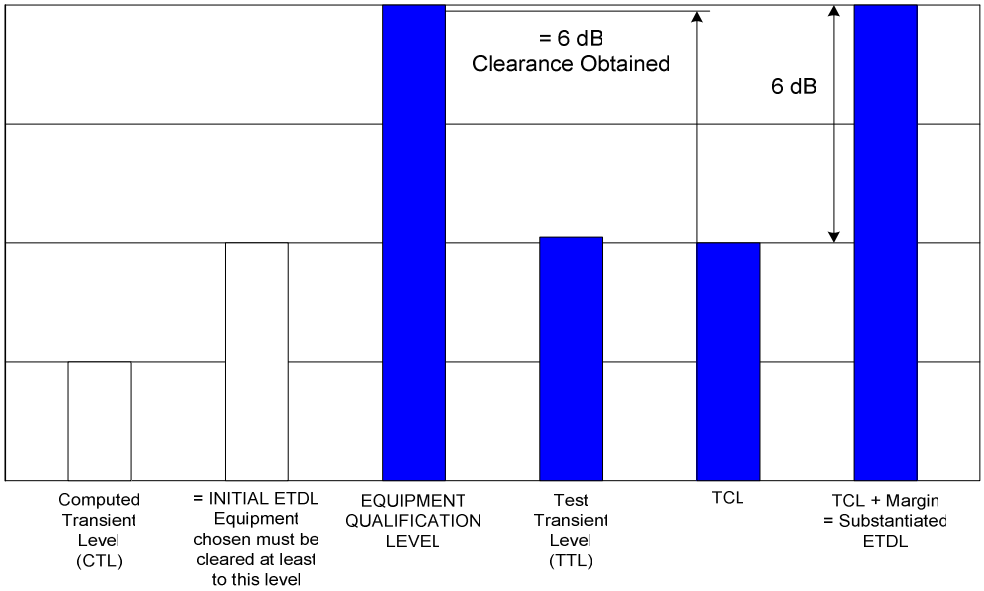

TCL > CTL, but equipment has been redesigned and is now cleared to a higher level qualification level so Clearance obtained

Figure 508/4 – B3 Various Levels Illustrated TTL > CTL

Clearance initially not obtained equipment re-qualification.

B.3.5 Equipment Tests

To obtain the TCL, and hence the ETDL for the equipment tests, bulk current measurements are made during whole weapon tests on the cable bundles of interest. During equipment tests, bulk current injection is used (for the Damped Sinewave Test) to excite the equipment cable bundles and the MTL current level is measured by a current probe. It should be realised that the relationship of individual wire currents to the total cable bundle current that occurs during an equipment test is not necessarily the same as the relationship that occurs at the same measuring point on the same cable bundle during a Whole Weapon Test. The adoption of the 12 dB margin, which is added to the TCL to achieve the ETDL, is taken to include factors of uncertainty relating to inadequacies of measurement and lack of a complete system test.

A possible way in which the magnitude of the margin could be reduced would be to qualify the equipment using a special system rig as representative as possible of the weapon structure. The various equipment are mounted on this rig, with the correct cable looms arranged in a manner to give, as closely as possible, the excitation that would occur in the real weapon when a representative lightning threat current is passed through the rig structure.

During pulse tests, responses are obtained in terms of cable bundle currents at the points of interest. Consequently equipment test limits for both the damped sinewave and the short, intermediate and long pulse tests are only obtained in terms of current. This is a further reason for the 12 dB margin and for making the common mode flashover and insulation breakdown tests of **Clause D.7.5.4**.

Equipment Tests, or rather equipment clearance to agreed levels, are both the starting and finishing point of the Clearance Exercise, as levels have to be specified at equipment procurement, often before the location of the equipment in the weapon is known. These levels then have to be justified or revised at the completion of the evaluation of Lightning Transient Protection, with subsequent re-testing (or installation redesign) if the TCL and Margin so dictate.

It should be noted that the levels from Ref [1] and given in **Annex G** are to be used when TCLs are not known were developed for aircraft. It is assumed by similarity that similar levels apply to weapons.

B.4. INDIRECT EFFECT TESTS ON WHOLE WEAPONS

B.4.1 Simulation of the Environment

Clearance should be based on analysis substantiated by whole weapon testing. Unfortunately such testing cannot always completely simulate the lightning environment and reproduce the conditions that will actually occur in practice.

There are several reasons for this, for example in the case of an air launched weapon. Here the lightning channel is a very high impedance compared with that of an aircraft or weapon. The aircraft or weapon is therefore effectively terminated with an open circuit and will resonate due to the sudden change of E field at a lightning attachment. Therefore there are current nodes at the nose and tail and at each wing tip, implying ½ wave resonances.

It is very difficult to simulate those resonances in weapon testing as the only way to do it is to use open arc terminations at each end of the weapon return conductor system. Such arcs require a very high generator voltage and the measurements are further complicated due to the large amount of electrical noise produced.

To avoid these complications and to achieve efficient use of stored energy, the pulse tests employ a direct connection of the weapon to the return conductors at the end remote from the generator. This means that there is a current antinode at the ‘short circuited’ termination remote from the generator and a node at the generator, giving ¼ wave resonances. Hence the test simulation of flight conditions is incorrect in this respect.

The measured response could be treated mathematically to remove the ¼ wave resonances and replace them by ½ wave resonances. It is considered that applying this process would not be worthwhile, both because of the complexity of the process itself and because of a lack of knowledge of the precise electrical conditions in free flight which the process would be attempting to simulate.

This source of inaccuracy in testing is therefore considered to be one of those allowed for in the overall margin, especially as modelling assumes ½ wave resonances. Despite the inevitable uncertainties, efforts should be made to make the configuration under test as realistic as possible.

B.4.2 Weapon Standard

It is important for a whole weapon test that it is representative of a production weapon in all aspects. In practice this may be difficult to achieve, as such tests often have to be made on a prototype or pre-production weapon where equipment installation and especially wiring layout may be appreciably different from the production model. Changes to the position of equipments in an equipment bay could make significant differences in the coupling to the wiring. Similar differences could also occur due to the type of cover or access door employed, for example if the latter was changed from an all metal construction to a partially conducting or insulating composite material.

Where changes such as those outlined above are inevitable following an equipment test, the implications on the clearance given to the weapon shall be assessed and agreed with the National Authority, who may require re-testing in certain areas.

B.4.3 Operation of Equipment and Safety Earth

The preferred method of operating the weapon equipment is to use the weapon's power supplies. However if that is not possible then a separate power supply is necessary. However, a unit which draws its power via a transformer from the mains should not be used, as such a supply will essentially be 'earthy' and that will unnecessarily complicate the safety earthing arrangements. Instead, an engine driven generator should be used which can then be isolated from earth. The insulation level used to obtain that isolation will be decided by the position of the safety earth on the system and may need to be sufficient to withstand the full voltage of the pulse generator.

When pulse tests are made a safety earth must be connected to the system to meet typical National Electrical Code requirements. Such an earth should be used with care to prevent capacitive circulating currents at the higher frequencies. For that reason the earth connection should be a high impedance above say 100kHz. At DC the impedance shall be as low as possible.

Care must be taken that the earth lead does not resonate with rig capacitance to ground. Such resonances can be minimised by careful positioning of the earthing point.

B.4.4 Return Conductors for Whole Weapon Tests

Computational methods should be used to design a return conductor system to permit correct field distribution around the weapon and hence the correct current density over the surface of the weapon. Two dimensional computer programmes will normally be sufficient to do this and modelling of the individual sections through the weapon to establish the position and spacing of the return conductors relative to the weapon. Hence, the field pattern around the weapon will be as close as possible to its operating environment without unmanageable high inductances being introduced. It is important that the surface current density (J_s) should be computed, especially near access bay doors and 'flux apertures' and compared with the operating environment values for 'J_s' to confirm that the design is acceptable. Further confirmation is then obtained during pulse tests by measuring 'J_s' at selected places and comparing the measured values with the computed values.

The lumped series inductance of the return conductor weapon system needs to be taken into consideration, as the total series inductance together with the pulse generator capacitor will determine the wavefront and amplitude. With the system excited with a test pulse, E field and surface current density measurements at selected positions are also made, and compared with calculated values.

It is particularly important to obtain the current density and direction (to a tolerance of ± 20%) on the weapon surface that occurs in practice and especially at equipment bays or apertures below, in which cables associated with the systems of interest are routed. When evaluating the efficacy of a return conductor system and measured transients, it is also important to investigate damped sinewave responses to ensure they are not due to spurious resonances, e.g. the resonances between the return conductors and a building.

Figures 508/4–B4 and **508/4–B5** illustrate different return conductor arrangements for air launched and ground/sea launched weapons. Attention is drawn to the possible need to use a different return conductor system should a free flight evaluation be required.

It should be realised that **Figures 508/4–B5** and **508/4–B6** serve only to illustrate principles. With regard to **Figure 508/4–B4**, a lightning attachment to the weapon as shown, although possible, is unlikely. An attachment (and exit) to the aircraft and none to the weapon, or one attachment/exit to the weapon and one to the aircraft are more likely. In the former case, there may still be a surface current which will flow from the aircraft wing (whether or not there is an attachment to it) on to the pylon and thence on to the surface of the weapon.

Where wire guided missiles are used special consideration will need to be given to attachment points.

B.4.5 Selection of Attachment Points

There can be more than one lightning path through a weapon and a pair of attachment points. One of those paths must be selected to give a worst case excitation. Sometimes it is not possible to define a worst case and more than one pair of attachment points must be tested to ensure that all possible modes of excitation have been taken into account. When that is so, the return conductors shall be designed and constructed to allow ease of selection in terms of the pair of attachment points required.

B.4.6 Non Linearity and Extrapolation to Full Threat

When performing pulse tests, non-linearity can occur due to the voltage or current waveforms dependent on skin resistance and due to sparking and arcing causing local changes in the current distribution over the surface of the weapon. It is therefore important that measurements are made at increasing threat levels and the results are plotted against those levels. If the results do not lie on a straight line, non linearity has occurred. If a reasonable straight line can be drawn through the results, it can then be projected to give the extrapolated full threat value of the transient. Extrapolation should be no more than a factor of 4.

When non linearity is present, a judgement must be made concerning the cause of that effect and whether or not it is valid to project that part of the results curve that may be linear, or if the most severe transient threat actually occurs at less than full threat excitation. When doing this, it should be remembered that modelling assumes a homogeneous structure at full threat (i.e. all flashovers that can occur have occurred) and hence the skin current distribution could be very different at full threat to that for low level pulse tests.

It should be realised that non linearity could occur between the maximum test excitation and full threat excitation, and judgements also have to be made in that respect.

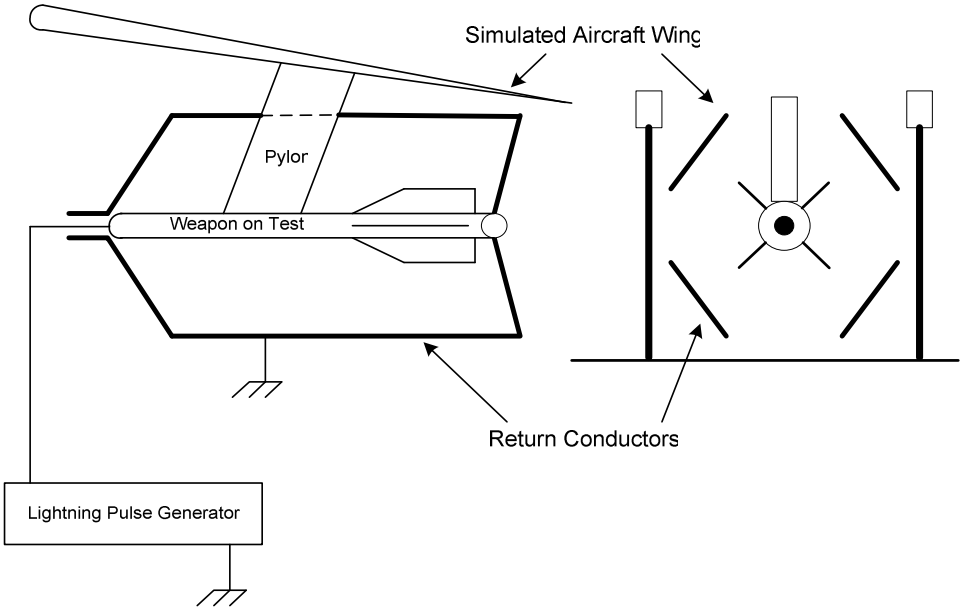

Figure 508/4 – B4 Outline Test Arrangement for Weapon Classes A and D2

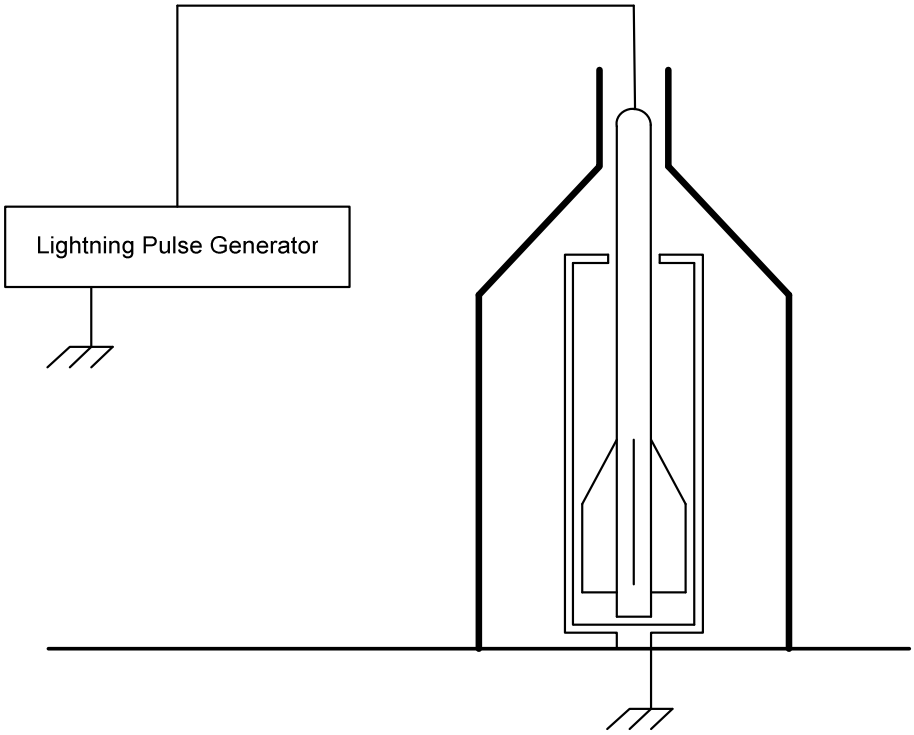

Figure 508/4 – B5 Outline Test Arrangement for Weapon Classes B, C and D1

B.4.7 Use of Clamped and Double Exponential Waveforms

Although a damped sinusoidal waveform can be used for a pulse test when the structure being tested is mainly metallic, such a waveform will not necessarily produce the correct response at the measurement points when the structure contains partially conducting composite such as CFC. This is especially so in hybrid structures containing a lot of CFC together with metallic components. The test waveform in **Figure 254-C1** of Ref [1] with the decay time stated gives a similar response to that which is likely to occur due to a real lightning excitation and approximates in shape to a double exponential waveform. The latter is a convenient waveform to use for analysis. Another reason for using that waveform rather than a damped sinusoidal waveform is that it is necessary to use a realistic waveform when comparing analysis, and the measured responses given by the pulse tests.

The amplitude spectrum for Waveform H in **Table 254-5** of Ref [1] only exceeds that for Waveform A in **Figure 254-C1** of Ref [1] above about 3 MHz but then only by about 3 dB. Apart from that real lightning is not a double exponential waveform but has a slow turn on. Hence the high frequency content of Component A (**Figure 254-8b** in Ref [1]) is much greater than that of an actual lightning excitation. Consequently a Component H excitation is not used for Pulse Tests.

It should be understood that the double exponential waveforms given in **Figure 254-C1** of Ref [1] are not meant to simulate lightning waveforms that actually occur Rather they are waveforms that combine the necessary di/dt, action integral, and decay parameters necessary for correct testing and analysis. They are designated Waveforms $A_{2\ s/a}$ ('s' for Ground and Sea, 'a' for Air Side use). The figure two indicates that they are waveforms concerning Indirect Effects.

The Waveforms A_2 in **Figure 254-C1** of Ref [1] are not intended to be Component A waveforms. The parameters of the Composite Test Waveform can, in principle, be generated by several different types of waveform and the so called Composite Test Waveform is not actually a waveform.

B.4.8 Pulse Tests to Ground and Ship Borne Systems

It is difficult to design a return conductor system such as that represented by **Figure 508/4–B5** as it is necessary to simulate as closely as possible the electromagnetic fields around the weapon that result from the lightning attachment and the flow of current into the ground, or the ship if sea borne. Knowledge of the current flow from the launcher into the ground plane is essential. With mobile installations that current flow will obviously change with location and it will be necessary to make simplifying assumptions and possibly test for different scenarios at the limits of the assumptions.

B.5 INDIRECT EFFECTS TEST ON PARTS OF WEAPONS

B.5.1 Applicability

Although weapons may comprise an extensive interconnected system such as an aircraft, ship or ground installation, it is often desirable to evaluate the voltages likely to be induced by lightning in individual sub-systems or components for example when these are thought to be particularly vulnerable, such as aerials and external sensors. The tests noted in **Clause B.8** are therefore needed when measurements are being made of voltages which could cause sparking or stress insulation on the wiring. This could include electrical equipment in parts of weapons such as radomes or external probes. Hence a 'whole weapon' test is not appropriate. It should be noted that exposure to resistive and /or flux penetration coupling is capable of causing gross common mode voltages of several kV, which can severely threaten insulation. Usually if flash-over voltages are being assessed, **Clauses B.8.10** or **B.7.5.4** and the comments in **Clause B.6** are relevant. Such measurements, often referred to as 'remote earth tests', give a worst case situation, giving the maximum open circuit common-mode voltage that can ever be available to drive current around the cable/weapon skin loop. Hence if all insulation can withstand that voltage there is no problem. Sometimes, however, it may be necessary to find out how that voltage divides between impedances in the loop. It may be necessary for other reasons to measure the actual voltages generated as, either, common-mode, differential-mode, or both. (For example, to determine if sparking or arcing could occur between two conductors where remote earth tests are not appropriate). When that is so, the test in Clause B.8.9 is appropriate.

B.5.2 Test Current Waveform

Ideally a test for Indirect Effects should employ a current waveform having the specified full-threat values for both the important parameters, but owing to the limitations of existing test facilities the Waveform D of **Figure 254-C7** in Ref [1] is used. This has a lower peak value, but is generally employed and the magnitude of the measured transients extrapolated to full threat values. Those values should be established taking into account the installation categories defined in **Annex C.3.5** of Ref [1].

B.5.3 Return Current Conductor Rig

The design of return conductors for whole weapon tests has been discussed in **Clause B.4.4**. For tests on parts of weapons the return current conductors should be distributed around the test object in cross-section and follow the contours of the object axially, thus forming an approximately co-axial system, as illustrated in **Figure 508/4–C2**. Depending on the shape of the object, 3 or 4 conductors are usually adequate and they should be placed so that the magnetic contours near the object are as nearly as possible the same as they would be in the operating environment (remote return current). The distance of the conductors from the object is a compromise between distortion of the field (too near) and excessive inductance requiring high driving voltages (too distant).

B.5.4 Data from Measured Waveforms

When analysing the waveforms obtained during induced voltage measurements, it should be remembered that voltages due to resistive or diffusion-flux coupling follow approximately the current waveform although the peak may be reached at a slightly different time. Voltages due to direct flux coupling follow approximately the rate of change of current and they therefore have a steep rise at switch-on and pass through zero at the time of peak current. For large test objects there may be high frequency damped oscillations superimposed on the slower waveform.

B.5.5 Combination with Direct Effects Tests

If the Direct Effects tests include a Waveform A shown in **Figure 254-C1** of Ref [1] this has one of the requirements for Indirect Effects tests (200 kA peak). Measurement of induced voltages can often be made provided that the rate of rise of the waveform is at least 0.4×10^{11} A/s. That value is the 2% level of first strokes in a negative flash (**Table 254-1** in Ref [1]). Depending on which waveform is used either the di/dt component or the IR component must be extrapolated to full threat.

B.6 ASSESSMENT OF VOLTAGES LIABLE TO STRESS INSULATION OR CAUSE VOLTAGE FLASHOVER

When evaluating common-mode voltages which are liable to stress insulation or cause voltage flashover it is often convenient, and sometimes necessary, to measure the voltage available to drive current around the loop formed by the conductor carrying the excitation current and the conductors and associated impedances in which the induced current will flow if there is voltage break-down.

This may be done by connecting one conductor to the other at a convenient place (e.g. at the connections to an external sensor) and then measuring the open loop voltage at the other end of the circuit. The di/dt and IR components of the measured waveform must be identified and extrapolated to full threat and then added together to give the maximum voltage which can stress insulation or which could be available to cause flashover. The two components have to be added as the real lightning waveform peak di/dt occurs at about the same time as peak current. However Lightning Test Waveforms give maximum di/dt at the start of the waveform. This will then give a worst case, as a given probability of occurrence of one parameter does not correspond to the same probability for another and therefore there is generally no need for additional safety factors.

B.7 REQUIREMENTS FOR INDIRECT EFFECTS TESTS ON WHOLE WEAPONS

B.7.1 Introduction

This Clause defines the requirements which must be met when variable level pulse tests are made as part of the Lightning Transient Assessment required in the LHDA.

B.7.2 General Requirements for Indirect Effects Tests

The general requirements of this leaflet shall apply to the Indirect Effects tests noted except that the test item shall be as defined in **Clause B.7.3**.

B.7.3 Selection and Preparation of Test Item

B.7.3.1 Weapon Standard and Configuration

Unless otherwise agreed with the National Authority, the weapon used for test shall be fully representative of a production weapon with respect to construction, the type and location of access doors and 'flux apertures' in relation to the system wiring of interest. This also applies to the type and installation of equipment, cable runs and wiring, relevant to the tests to be made.

B.7.3.2 Operation of the Weapon Equipment during Tests

Arrangements shall be made so that the systems of interest can be operated during the tests, as described in this leaflet. This is to enable full assessment of the weapon systems operation during application of tests.

B.7.3.3 Modification of Weapon to Accommodate Diagnostics

The weapon shall be suitably modified without compromising the requirements of **Clause B.7.3.1** to allow the fitting of sensors and diagnostic equipment necessary to make the measurements.

B.7.3.4 Caution - Preparation of Weapon for Safety during Lightning Tests

In a weapon in which fuel or liquid propellant has been present, the system shall be made safe, either by filling the tanks and fuel lines with water, or by making provision for continuous purging with an inert gas such as nitrogen. When such purging is used, the oxygen content of the effluent gas shall be continuously monitored and tests made only when the content is below the acceptable level. All explosives and fuel and other active material shall be removed from the weapon, or a special inert round, consistent with the requirements of **Clause B.7.3.1**, shall be provided. When an inert gas is used to pressurise the system, the above precautions shall still be taken.

B.7.4. Test Configuration

B.7.4.1 General Arrangement for Weapon Classes A and D

Weapons in Class A and D2 shall be mounted on a pylon or launcher, or a structure electrically representative of a pylon or launcher. This is then all supported on stands, which shall be isolated from the weapon and pylon structure, with sufficient insulation to withstand the maximum voltage of the lightning pulse generator. A return conductor system shall be constructed around the weapon and pylon structure according to the requirements of **Clause B.7.4.6** and the principles illustrated in **Figure 508/4–B3** with provision for simulated lightning excitation between pairs of attachment points as defined in the Test Plan. A hard wire connection shall be made between the weapon and the return conductors at the end of the system remote from the pulse generator.

B.7.4.2 General Arrangement for Weapon Classes B, C and D1

Weapons in Classes B, C and D1 shall be arranged in their launcher, which shall be attached to a ground plane, and a return conductor system constructed around the weapon and launcher according to the requirements of **Clause B.7.4.6** and the principles illustrated in **Figure 508/4–B5**. Provision shall be made for simulated lightning excitation between the attachment points defined in the Test Plan and simulated ground as described in this leaflet. If necessary a hard wire connection shall be made between the weapon and return conductors at the end of the system remote from the pulse generator.

B.7.4.3 General Arrangement for Free Flight Assessments

It should be noted that if an assessment is required of a weapon in free flight it may need to be arranged in a return conductor system according to the principles illustrated in **Figure 508/4–B6**.

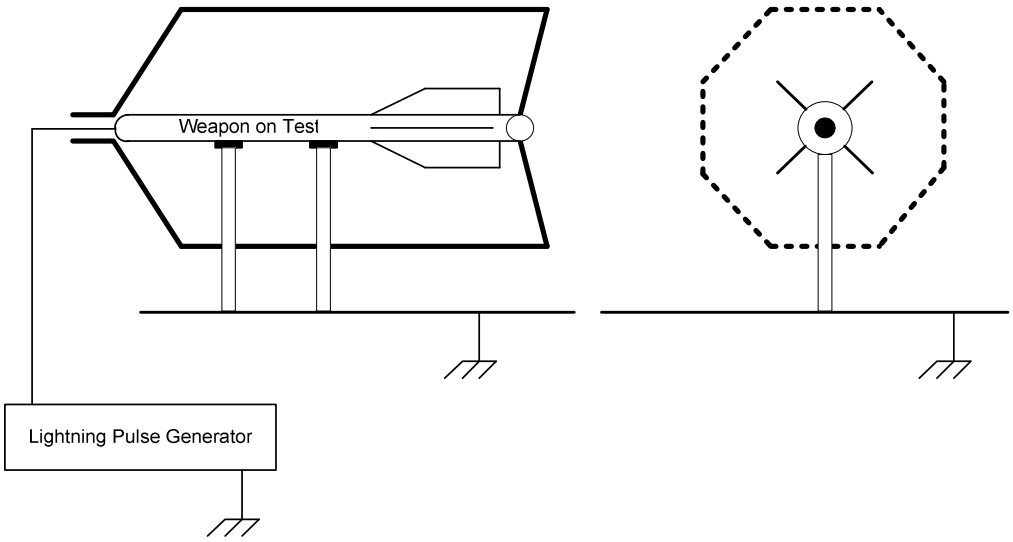

Figure 508/4 – B6 Outline Test Arrangement for Free Flight Assessment

B.7.4.4 Safety Earth and Isolation of Ground Power Supply

Only one connection shall be taken from the Test Site earth system to the pulse generator / weapon / return conductor system to form a safety earth which shall have a low DC resistance but, a high impedance above 100 kHz. If operation of equipment during the tests entails the use of a test facility power supply, this shall be isolated from earth with insulation sufficient to withstand the voltage that will appear between the weapon and earth when the pulse generator is operating.

B.7.4.5 Connection of Lightning Pulse Generator

A lightning pulse generator shall be connected to the return conductor system and shall be isolated from earth, with insulation sufficient to withstand the maximum voltage of the generator, and connected to the weapon and return conductor system with hard wire connections.

B.7.4.6 Return Conductor System

B.7.4.6.1 Simulation of the Environment

A system of Return Conductors shall be constructed around the weapon and its pylon/launcher system. It shall, consistent with an acceptable value of inductance as defined in this leaflet, simulate as nearly as possible the operating environment electromagnetic field pattern around the weapon. The current density and direction on the weapon surface, from a lightning test pulse excitation point of view, are within 20% of that which would actually occur in practice.

B.7.4.6.2 Inductance Value

The system shall also be designed, consistent with **Clause B.7.4.6.1** and with the design of the lightning pulse generator, to give an inductance value such that the peak value and maximum di/dt of the excitation current specified in **Clause B.5.1** shall be achieved.

B.7.4.6.3 Surface Current Density

Computer calculations shall be made of E field and the weapon surface current density and direction at points defined in the Test Plan for comparison with pulse test measurements.

B.7.4.6.4 Termination and Current Attachment Points

The return conductor systems shall be designed so that they can be modified to allow selection of the current attachment points defined in the Test Plan.

B.7.4.6.5 Isolation

The return conductor system shall be isolated from the weapon (other than by the special connections noted above) and from earth by insulation sufficient to withstand the full voltage of the lightning pulse generator.

B.7.4.6.6 Validation of Return Conductor System

Before the return conductor system (of weapon and conductors) is used for tests, it shall be validated by discharging the pulse generator into the system and comparing E field and surface current density measurements with those predicted by the calculation.

B.7.5. Pulse Tests

B.7.5.1 Test Waveforms and Maximum Parameters

Test configuration as given in **Clause B.7.4**. The pulse generator shall be capable of providing a double exponential pulse (or equivalent damped waveform) such that, together with the return conductor system, the -maximum parameters may be obtained for the waveform as defined in Ref [1].

B.7.5.2 Measurements to be Performed

According to the requirements of the Test Plan, provision shall be made for the measurement of:

a. dE/dt at the start of the transmission line formed by the return conductors and weapon arrangement, at a position halfway along it, and in flux apertures.

b. The generator current waveform.

c. The current density J at selected points on the exterior surface of the weapon.

d. Internal magnetic fields at selected points inside the weapon, especially in equipment bays.

e. Cable bundle currents on the cables of interest.

Measurement information shall be transmitted to the recording equipment preferably by Fibre Optic Links (FOL's). Alternatively, by the careful use of hard wire connections, installed to avoid earth loops, as appropriate to a particular measurement. The FOL's shall be capable of making measurements over a frequency band of at least 50 Hz to 50 MHz, but if possible up to 100MHz.

B.7.5.3 Test Levels

Unless otherwise agreed with the National Authority pulse tests shall be made with equipment operating at (at least) three well spaced current levels up to a peak current value of in the order of 50 kA, so that it is possible to:

a. Compare the surface current density measurements with the computer predictions of **Clause B.7.4.6.3** and hence confirm the accuracy of the return conductor system design, as required **Clause B.7.4.6.6**.

b. Confirm the linearity (or otherwise) of the measurements with increasing pulse current

c. To provide by extrapolation, the full threat current and voltage responses on the cables and at the equipments specified in the Test Plan.

B.7.5.4 Common Mode Flash-over and Insulation Breakdown

Measurements shall be made of any common-mode voltage between wires and ground which could result in insulation being stressed to a level at which breakdown or flash-over might occur. Such measurements shall be made as follows:

a. The requirements of **Clauses B.7.2** to **B.7.4** shall apply.

b. High impedance measurement equipment shall be connected at one end of the circuit under test, which shall otherwise be open circuit and a temporary connection to structure shall be made at the remote end.

c. Measurements shall be made at the same levels as the tests indicated either simultaneously with the measurements or separately. Linearity of the measurements shall be demonstrated.

d. The measured transient waveform shall be separated into di/dt and IR components and the amplitude of those components extrapolated to full threat. The maximum driving voltage capable of threatening insulation will be given by the sum of the extrapolated components.

If a functional weapon is used, after the Pulse Tests all electronic systems shall be checked to ensure the weapon is functioning correctly.

B.8 REQUIREMENTS FOR INDIRECT EFFECTS TESTS ON PARTS OF WEAPONS

B.8.1 Introduction

This Clause defines the requirements which must be met when Indirect Effects tests are made on wiring or electrical equipment in parts of weapons, or sections of a weapon, when the "whole weapon tests" are not appropriate.

B.8.2 General Requirements for Indirect Effects Tests

The general requirements of this leaflet shall apply to all the Indirect Effects tests. Guidance concerning Indirect Effects tests on parts of weapons is given in this annex.

B.8.3 Combination with Direct Effects Tests

Indirect Effects tests may be made at the same time as Direct Effects tests provided that all the requirements for both types of test are met and correctly noted in the Test Plan.

B.8.4 Waveform

Waveform D_2 defined in **Figure 254-C7** of Ref [1] shall be used unless Direct Effects tests are also being carried out. In the latter case the waveform shall be that needed for the Direct Effects test with a maximum rate of change of current commensurate with the test current component being used. I.e. For Component A not less than 0.3×10^{11} A/s (Ground Use) or 0.4×10^{11} A/s (Air Side). For Component D di/dt shall be 10^{11} A/s (Ground Use) or 1.4×10^{11} A/s (Air Side).

B.8.5 Current Path

The current shall be applied to the test object through a solid connection, not an arc. The choice of entry and exit locations and the design of the return current conductors shall be such that the current in the test object flows as nearly as possible in a manner corresponding to that anticipated in an actual lightning strike.

B.8.6 Test Levels

The tests described in **Clauses B.8.9** and **B.8.10** shall be conducted at a number of current levels (maintaining the same waveform shape) leading up to the full level of waveform D_2 (or components A and D if Direct Effects tests are also being performed). The measured peak transients shall be plotted against the peak currents to verify that a linear relationship exists.

B.8.7 Load Impedances

The wiring forming part of the test object shall be terminated with load impedances simulating, over the relevant frequency range, those encountered in the actual installation.

B.8.8 Data to be Recorded

For each test 'shot', calibrated waveforms of the test current and the induced transients shall be recorded in permanent form on a common calibrated time-base so that their relationship in time is known. Consideration shall be given to the possible need to repeat some shots with different recorder time-base so that records may be obtained of both the whole transient and a suitably expanded initial portion (leading edge). Repeated shots may also be necessary if the number of recording channels is less than the number of transient monitoring points. When shots are repeated care shall be taken to ensure that test conditions remain the same.

The noise level in each diagnostic shall be recorded to allow calculation of signal to noise ratio.

B.8.9 Induced Voltage Measurements

Common-mode and differential-mode measurements shall be made, according to the requirements of the Test Plan, as noted in the following clauses.

The requirements of **Clauses B.8.2** to **B.8.8** shall apply.

Peak induced voltages shall be extrapolated to full threat level as follows:

a. Induced voltages dependent on resistive or diffusion-flux coupling shall be extrapolated linearly to a current peak value of 200 kA.

b. Induced voltages dependent on aperture-flux coupling shall be extrapolated linearly to a test current rate of change of 10^{11} A/s for Weapon Classes B, C and D1 and 1.4 x 10^{11} for Weapon Classes A and D2.

If a voltage flash-over or sparking is observed, the threshold level of test current at which it occurs shall be recorded, and the measurements repeated at a test current level just below the threshold. The National Authority shall be consulted before proceeding with further tests.

B.8.10 Insulation Integrity Test

When the Test Plan requires insulation breakdown and voltage flash-over assessment tests to be made to satisfy this leaflets of "remote earth" induced voltage measurements shall be made.

ANNEX C

TECHNIQUES AND GUIDANCE FOR DIRECT EFFECTS TESTS

C.1 SIMULATION OF THE ENVIRONMENT

C.1.1 Simulation of the Correct Current Distribution

a. In laboratory tests, transmission lines or cables are used to connect the test object to the lightning current generator. The magnetic fields associated with these conductors will influence the current distribution within the test object. The coupling conductor layout will need to be designed in a manner that will satisfy these two main requirements:

1. The current distribution within the test object must be as close as possible to that which will exist in natural lightning strike conditions.
2. The total circuit inductance must be kept as low as possible in order to ease the problem of driving currents of very high di/dt and high peak values in the circuit.

One solution to this problem is to have a co-axial or quasi co-axial system of multi-path return conductors. A schematic diagram of such a system is shown in **Figure 508/4–C1**. This has four equally spaced return conductors, but the principle can be extended to any number as required.

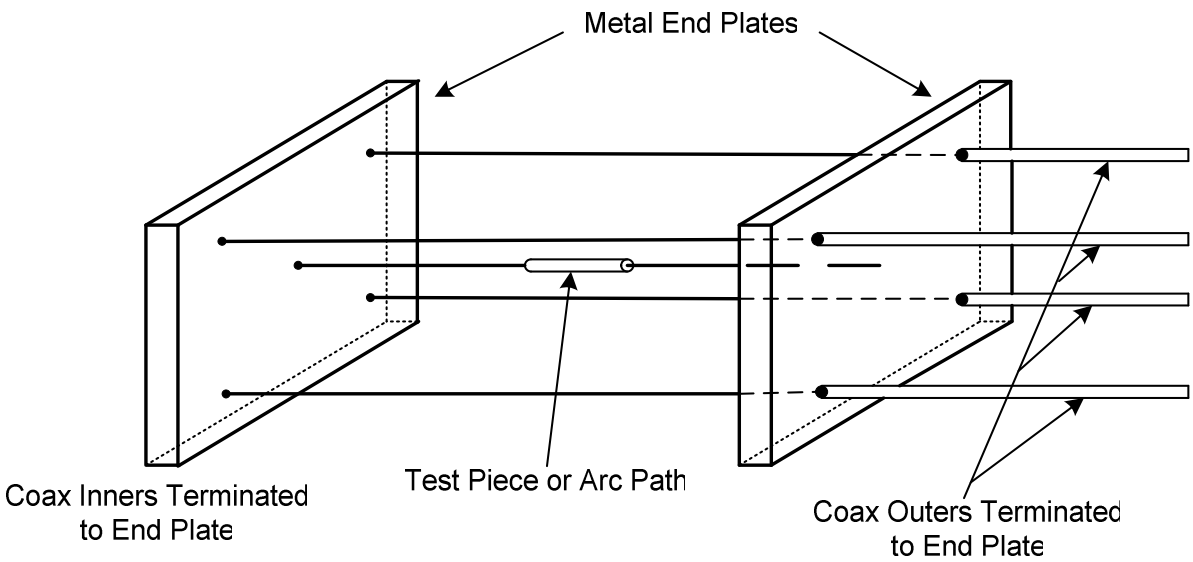

Figure 508/4 – C1 A Basic Quasi Co-Axial System

b. The principle has been refined as indicated in **Figure 508/4–C2** where three return conductors are used. In this technique the magnetic lines around the test object are plotted, and the three return conductors are placed at a convenient distance from the test object and on the same magnetic surface. The conductors are arranged on this surface in such a way that the value of the function H dl is the same between each conductor and those either side.

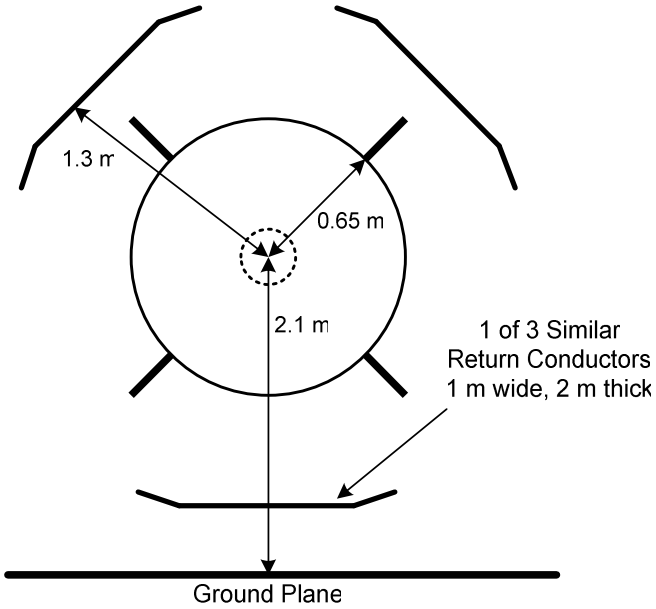

Figure 508/4 – C2
Cross Section of a Three Conductor Quasi Co-Axial System around an Object of Complex Geometry

c. **Figure 508/4–C3** shows how the correct current distribution can be achieved in a CFC test panel using three return conductors and a metal enclosure to represent a box as in an aerofoil section.

The test current chosen must give the same peak current density in the panel as it would have in the wing, and also the same rise time and decay time.

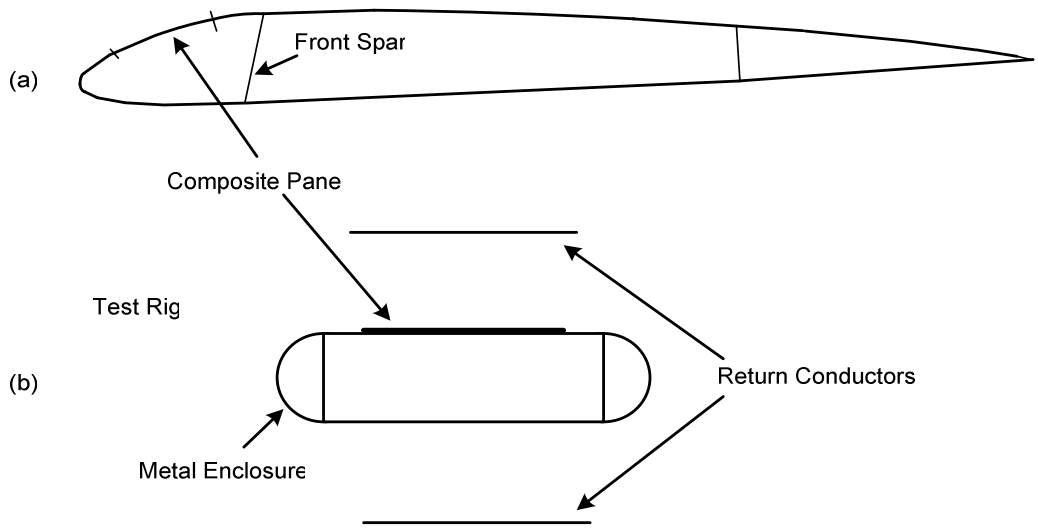

Figure 508/4 – C3
Two Conductor System to Test a Composite Panel using a Metal Enclosure to Represent an Aerofoil Section

C.1.2 The Jet Diverting Electrode

In the early work on arc root burn through of metal panels, the results were strongly influenced by the arc length employed in the tests. This was found to be due to the presence of jets of ionised and neutral particles emitted from the arc root on the test object and also on the test electrode. High speed cine film showed these jets to be very active up to 50 mm or so from each arc root. In a natural strike to a body, only the jet from the arc root on the body exists and a true simulation requires that the jet emanating from the test electrode in a laboratory test should be eliminated. It has been shown that this jet is always normal to the surface of the electrode, and so the electrode jet can be separated from the arc channel, and directed away from the test object by redirecting the arc root to an appropriately angled facet of the electrode, by means of a suitable insulator. **Figure 508/4–C4** shows a typical jet diverting electrode.

Experiments with this type of electrode have given results sensibly independent of arc length in excess of 15 mm, indicating that the electrode jet effect has been virtually eliminated.

To prevent polarity of the test waveform influencing the test, the arc length should be at least 50 mm.

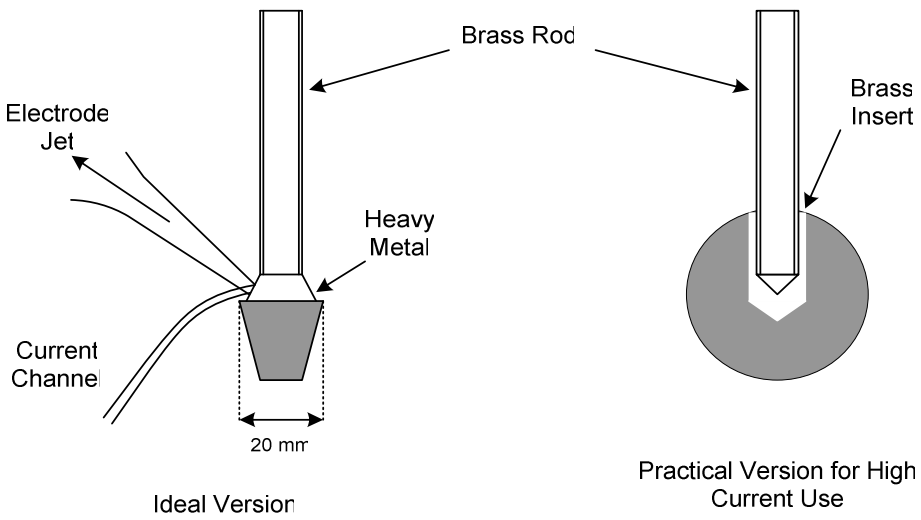

Figure 508/4 – C4 Jet Diverting Electrodes

C.1.3 Other Environmental Considerations

There are no requirements at present to simulate either the effects of forward speed, or the effects of altitude, e.g. reduced atmospheric pressure. The effect of forward speed viz. the swept stroke effect, is allowed for by defining the dwell time in Zone 1A and 2A to be 50 ms for test purposes.

C.2 TEST CURRENT GENERATION

Because of the very high power rate of the simulated lightning stroke, the generation of lightning simulation currents can only be achieved in practice by storing energy at a lower power rate over a long period. This energy is the released at a very high power rate for the short duration of the simulated lightning pulse.

Capacitive storage and inductive storage are the two forms most suitable for lightning simulation, although heavy duty battery systems have been used for the generation of component C.

In general, the capacitive storage system is the most convenient and easiest to control practically, but the inductive system gives the best simulation.

A practical solution is the use of the "clamped" ‘Capacitor Inductance Resistor’ discharge circuit. In this system, energy is stored in a capacitor and discharged into the test object. The initial discharge current will be oscillatory in nature due to the inductance in the load. The first quarter cycle of this discharge will form the "rise" portion of the test waveform. At the moment of maximum current (zero capacitor voltage) all the energy will have been stored in the load inductance. The clamp switch may then be closed and the energy stored in the inductance will discharge in to the load forming the "tail" part of the required waveform. Extra inductance can be added as required to produce the correct waveform. The basic system is indicated in **Figure 508/4–C5**.

The Clamped method is generally used for the B and C components. The A and D components may use the critically damped approach, where the clamp switch is not closed and the value of R is chosen for the required waveform. (The same circuit can be used with $R<<2\sqrt{(L/C)}$ for generation of the damped sine wave)

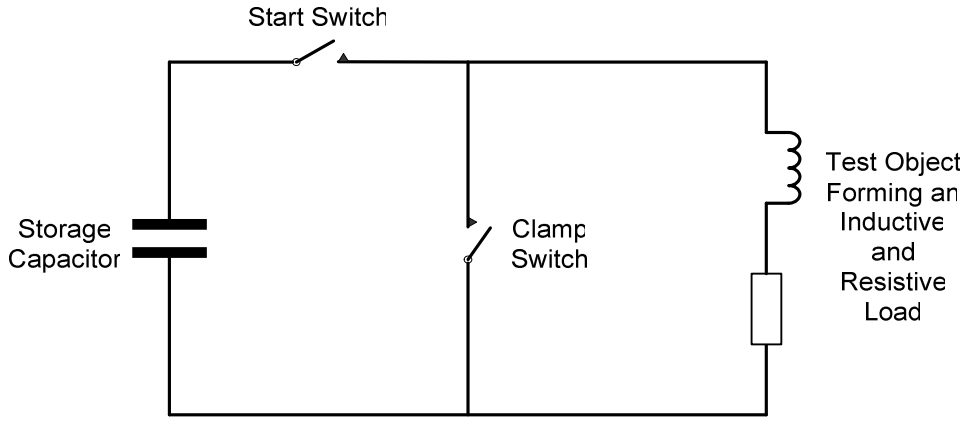

Figure 508/4 – C5 Basic Circuit for a Lightning Generator

C.3 REFERENCE TO EARTH POTENTIAL

Diagnostics of high current pulsed circuits can be very difficult, and the first requirement is the elimination of all earth current loops. This can only be achieved successfully if the entire system including the high current circuit, the control circuit, and the diagnostic circuits are referenced to earth potential at one point and one point only. This is termed "the experimental earth reference point". For this purpose the screened room will also be considered as part of the diagnostic circuit. Those parts of the control circuit of the diagnostic circuits, which are completely isolated from the system by pneumatic or fibre optic links, may be separately referenced to earth potential for safety reasons. Great care must be taken to ensure that there are no unintentional connections, such as connection to a recording device in common use with a diagnostic probe that is not isolated from the high current pulse circuit, or through a common mains connection. Earth loops resulting from multipoint earthing will almost certainly disturb the diagnostics, so that what is recorded may not be what is actually happening. In the extreme they can distort the current path through the test object, so that the intended test is not actually conducted. The results of any test conducted under conditions of multi point earthing should be considered as unreliable and should be discarded.

C.4 DIAGNOSTICS

C.4.1 Voltage and Current Measurement

Voltage measurement can conveniently be made using suitable potential dividers. The low voltage end of the divider must be connected directly to the experimental earth reference point, and care taken to avoid earth loops.

When analysing test results it is sometimes helpful to be able to compare waveforms of the voltage across the load with the current through the load. Those waveforms may therefore be recorded on a common time base. Current measurements can be made in a number of ways. These include:

a. Low inductance resistive shunts;

b. Magnetic probes, pick-up coils, and Rogowski coils;

c. Other magnetic field effects probes such as 'Hall Effect'.

Shunts are useful for intermediate and continuing current tests for currents from 100 A to some tens of kiloamperes, where the di/dt is low and the circuit can tolerate the insertion inductance. Calibration is absolute, and the diagnostic is robust consistent, and reliable. The shunt must be capable of carrying the action integral of the pulse without significant temperature rise, and must be introduced at the experimental earth reference point only.

Rogowski coils and magnetic probe coils may be used for the higher currents with di/dt in excess of 5 x 10^9 A/s. The magnetic probe coil has the better high frequency performance. Neither system need be in metallic contact with the high current circuit, and therefore need not be connected to the experimental earth reference point. They are both susceptible to any high frequency electrical noise. This may best be counteracted by the use of balanced twin cables run in solid copper tubes. The copper tubes must be kept directly against and in electrical contact with the high current transmission lines from the position of the probe to the experimental earth reference point.

Other magnetic field effects transducers include Hall Effect probes and Faraday Rotation Effect Transducers. These are also electrically isolated from the main circuit but any cables to them must be run as described for Rogowski coils.

C.4.2 Other Diagnostic Tools

Other diagnostic tools that can be employed include:

a. Photographic instruments, e.g. High speed cine cameras for arc root studies; still cameras using high speed film or fibre optics and light sensitive transducers for spark detection.

b. Thermocouples, heat sensitive paints, or thermal imaging cameras for hot spot detection or surface temperature measurements.

C.4.3 Test Waveforms

Details of the Composite Test Waveform components (see REF [1]) to be used in a particular test are given in **Tables 508/4–C1** to **508/4–C9**.

Note: Where in the test methods described one waveform component has to immediately follow another, the second component shall start within 1 ms of the cessation of the first component.

C.5. FACTORS AFFECTING THE NEED FOR TESTING

When deciding the need for testing during an assessment, the factors noted below should be borne in mind.

C.5.1 Metal Burn Through

Reference **Tables 508/4–C1** and **508/4–C2**

The National Authority will normally require that Metal Burn Through Tests be conducted on metal skins unless:

a. It can be shown that melt-through of the skin does not constitute a hazard to the weapon.

b. The surface is in a Zone 1A or 2A region of a Class A or D weapon and the skin is manufactured from aluminium alloy having a thickness in excess of 2 mm.

c. Special approved lightning protection methods have been adopted (e.g. sandwich panels).

d. In the case of skins manufactured from special alloys (for example titanium alloy) it can be demonstrated, beyond all reasonable doubt from previous experience, laboratory experiments, interpolation of earlier results, or by calculation, that skin melt through cannot occur as the result of lightning attachment.

REQUIREMENTS	1	The general requirements of **Clause 6** shall apply.
	2	The test object shall be connected to the lightning current generator by an open arc to the point of test and the test current shall return to the generator via a return conductor configuration which shall be designed to assist in stabilising the arc channel and to produce the correct current distribution for a distance of not less than 400 mm from the centre of the arc root.
	3	The test electrode shall be of the 'jet diverting type', **Figure 508/4 – C4**. The arc shall be not less than 50 mm long and may be initiated by a fine wire, not exceeding 0.1 mm diameter. The wire may be either metallic (e.g. copper) or carbon fibre.
	4	Test arrangement shall be referred to earth potential at one point only.
	5	The moment of penetration shall be detected and recorded on the time base used for voltage and current measurements.
TEST WAVFORMS		
Zone 1A		Unipolar pulse (for amplitude and duration see Ref [1] **Table 254-4**)
Zone 2A		Unipolar pulse (for amplitude and duration see Ref [1] **Table 254-4**) immediately followed by Component D (see Note 1).
Zone 1B		Component C immediately followed by Component D (see Note 1).
Zone 2B		Component C immediately followed by Component D (see Note 1).
Note 1 All zones are always relevant to Weapon Classes B, C and D1. In some cases the zones may be applicable to Weapon Classes A and D2, Zones 1B and 3.		

Table 508/4 – C1 TEST 1 – Metal Burn Through

REQUIREMENTS	1	Requirements 1 to 4 of **Table 508/4 – C1**. Test 1 shall apply
	2	The temperature of the inner surface under the arc root shall be measured by the use of temperature sensitive paints, thermo-couples, thermal imaging cameras, or other forms of temperature measuring systems which can be used without the risk of disturbance by the high electro-magnetic fields created by the test current.
TEST WAVFORMS		
Zone 1A		Component A immediately followed by a unipolar pulse (for amplitude and duration see Ref [1] **Table 254-4**).
Zone 2A		Unipolar pulse (for amplitude and duration see Ref [1] **Table 254-4**) immediately followed by Component D (see Note 1)
Zone 1B		Component A with duration increased to give the Action Integral required by Ref [1], immediately followed by Component C.
Zone 2B		Component C immediately followed by Component D (see Note 1).
Note 1 All zones are always relevant to Weapon Classes B, C and D1. In some cases the zones may be applicable to Weapon Classes A and D2, Zones 1B and 3.		

Table 508/4 – C2 TEST 2 – Hot Spot Formation

C.5.2 Arc Root Damage To CFC Skins

Reference **Tables 508/4–C3**, **508/4–C4**, **508/4–C5** and **508/4–C6**.

The National Authority will normally require that arc root damage tests shall be conducted on all CFC skins except:-

e. For any parts that lie in Zone 3 areas of Weapon Classes A and D.

f. When a zoning relaxation can be applied and for any Zone 2A surface of Weapon Classes A and D protected by an approved system of surface protection such as a sacrificial metal layer.

g. Where it can be shown that any structural damage such as delamination of a composite is of minor nature and:

   1. Will be restricted to the immediate arc root area.
   2. Will not be extended during subsequent flight by aerodynamic forces or by other means to the point where safety or suitability for service is threatened.

REQUIREMENTS	1	Requirements 1 to 4 of **Table 508/4 – C1**. Test 1 shall apply
	2	The extent of the damage shall be assessed by methods decided by the National Authority
TEST WAVFORMS		
Zone 1A		Component A
Zone 2A		Unipolar pulse (for amplitude and duration see Ref [1] **Table 254-4**) immediately followed by Component D (see Note 1)
Zone 1B		Component A with duration increased to give the Action Integral required by Ref [1], immediately followed by Component C
Zone 2B		Component C immediately followed by Component D (see Note 1).
Note 1 All zones are always relevant to Weapon Classes B, C and D1. In some cases the zones may be applicable to Weapon Classes A and D2, Zones 1B and 3.		

Table 508/4 – C3 TEST 3 – Arc Root Damage Tests for CFC Skins

REQUIREMENTS	1	Requirements 1 to 4 of **Table 508/4 – C1**. Test 1 shall apply
	2	The extent of the damage shall be assessed by methods decided by the National Authority
TEST WAVFORMS		
Zone 1A		Unipolar pulse (for amplitude and duration see Ref [1] **Table 254-4**)
Zone 2A		Unipolar pulse (for amplitude and duration see Ref [1] **Table 4**) immediately followed by Component D (see Note 1)
Zone 1B		Component C immediately followed by Component D (see Note 1).
Zone 2B		Component C immediately followed by Component D (see Note 1).
Note 1 All zones are always relevant to Weapon Classes B, C and D1. In some cases the zones may be applicable to Weapon Classes A and D2, Zones 1B and 3.		

Table 508/4 – C4 TEST 4 – Arc Root Damage on Metal Sandwich Panels with Non Conducting Honeycomb Core

REQUIREMENTS	1	Requirements 1 to 4 of **Table 508/4 – C1**. Test 1 shall apply
	2	The extent of the damage shall be assessed by methods decided by the National Authority
TEST WAVFORMS		
Zone 1A		Component A
Zone 2A		Unipolar pulse (for amplitude and duration see Ref [1] **Table 254-4**) immediately followed by Component D (see Note 1)
Zone 1B		Component A with duration increased to give the Action Integral required by Ref [1], immediately followed by Component C
Zone 2B		Component C immediately followed by Component D (see Note 1).
Note 1 All zones are always relevant to Weapon Classes B, C and D1. In some cases the zones may be applicable to Weapon Classes A and D2, Zones 1B and 3.		

Table 508/4 – C5 TEST 5 – Arc Root Damage on Thin Metal Sandwich Panels with Ablative Layer

REQUIREMENTS	1	Requirements 1 to 4 of **Table 508/4 – C1**. Test 1 shall apply
	2	The extent of the damage shall be assessed by methods decided by the National Authority.
TEST WAVFORMS		
Zone 1A		Component A.
Zone 2A		Unipolar pulse (for amplitude and duration see Ref [1] **Table 254-4**) immediately followed by Component D (see Note 1)
Zone 1B		Component C immediately followed by Component A with duration increased to give the Action Integral required by Ref [1]
Zone 2B		Component C immediately followed by Component D (see Note 1).
Note 1 All zones are always relevant to Weapon Classes B, C and D1. In some cases the zones may be applicable to Weapon Classes A and D2, Zones 1B and 3.		

Table 508/4 – C6 TEST 6 – Arc Root Damage on CFC Sandwich Panels with Non Conducting Honeycomb Core with and without Ablative Layer

C.5.3 Ohmic Heating Tests

Reference **Table 508/4 – C7**

The National Authority will normally require that an analysis be made of the probable lightning current distribution, with particular reference to areas of very high current concentration in small section conductors in confined spaces. All items likely to be at risk from ohmic heating shall be tested, or otherwise shown to be safe. Also, when ohmic heating tests are to be made on parts of weapon systems of CFC construction, the National Authority will normally require that an assessment be made of the probable lightning current distribution. Particular reference should be made to CFC/CFC or CFC/Metal Junctions, or where current flows in thin CFC skins or in CFC/Metal Honeycomb Panels. Tests will normally be required on all such areas shown in the analysis to be potentially at risk unless it can be demonstrated beyond all reasonable doubt (from previous experience, interpolation of earlier results, or by calculation) that no hazard exists.

When tests are made the temperature rise of the test item should be less than the value agreed with the National Authority.

REQUIREMENTS	1	Requirements 1 to 4 of **Table 508/4 – C1**. Test 1 shall apply
	2	Hard-wired connections to the test item shall be used unless tests for arc root problems are also to be investigated, when the test object shall be connected to lightning current generator in accordance with the requirement of Test 1, Requirement 2.
	3	When open arc testing is done, the return conductor configuration shall also be designed to achieve the correct current distribution in the rest of the test item away from the arc root. The test electrode shall be of the 'jet diverting type'. The arc shall be not less than 50 mm long and may be initiated by a fine wire, as defined in Test 1, Requirement 3.
	4	When hard-wired connections are used, the return conductor configuration shall be designed to produce the correct current distribution in the test object.
	5	A record shall be made of the test currents on a calibrated time base, so that the total action integral of the test current may be determined. Temperature sensitive paints, thermocouples, thermal imaging cameras, or other methods shall measure the temperature of the test object. The voltage across the load may also be recorded on a common time base with the test current, as an aid to the analysis of the test results.
TEST WAVFORMS		
Zone 1A		Component A.
Zone 2A		Component D.
Zone 1B		Component A with duration increased to give the Action Integral required by Ref [1]
Zone 2B		Component D.

Table 508/4 – C7 TEST 7 – Ohmic Heating Tests

C.5.4 Magnetic Forces

Reference **Table 508/4 – C8**

The National Authority will normally require that an analysis of the geometry of the weapon be made to identify areas of very high current density, where hazards from mechanical forces may exist.

The effect of magnetic forces on a structure is a complex function of peak current, Action Integral, current rise time, current decay time, and the mechanical response of the structure. Determination of the effect by calculation alone, or by measurement of the peak forces alone, is very difficult and frequently impossible due to the large number of unknowns that usually exist. For those reasons the most satisfactory method of estimating the effect is by full threat testing with visual inspection or non-destructive testing conducted both before and after the lightning test.

REQUIREMENTS	1	Requirements 1 to 4 of **Table 508/4 – C1**. Test 1 shall apply
	2	The test object shall be connected to the lightning current generator by a hard-wire connection to the point of test and the test current shall return to the generator via a return conductor configuration which shall be designed to produce the correct current distribution in the test object. For tests involving magnetic reaction with the arc channel, the arc channel itself shall be represented by a rigid metal conductor.
	3	A record shall be made of the test current on a calibrated time base, so that both peak current and Action Integral of the test current can be determined. The voltage across the load may also be recorded on a common time base with the test current, as an aid to the analysis of the test results.
	4	The effects of the magnetic forces on the test object shall be determined by visual inspection or other non-destructive test methods as may be decided by the National Authority.
TEST WAVFORMS		
Zone 1A		Component A
Zone 2A		Component D
Zone 1B		Component A with duration increased to give the Action Integral required by Ref [1]
Zone 2B		Component D.

Table 508/4 – C8 TEST 8 – Magnetic Forces

C.5.5 Acoustic Shock Wave Tests

Reference **Table 508/4 – C9**

Significant and serious damage from an acoustic shock wave is rare and only occurs in the immediate arc root area, either due to an initial attachment or to a restrike. It does not occur as a result of a swept stroke attachment unless that attachment is the result of a restrike. With metal skins the damage is seldom noticeable and rarely exceeds a small indentation in the skin at the arc root. In thin CFC panels however, puncture of the skin can occur. Consequently the National Authority will normally require tests for acoustic shock wave damage to be conducted on CFC skins which are less than 1 mm thick and which are situated in Zones 1A, 1B or 2B, even if such a skin forms the outer skin or a honeycomb sandwich panel.

REQUIREMENTS	1	Requirements 1 to 4 of **Table 508/4 – C1** Test 1 shall apply except that a plain electrode may be used.
	2	A record shall be made of the test current on a calibrated time base, so that the peak current and Action Integral can be determined.
	3	The extent of the damage shall be determined by visual inspection or other non-destructive test methods as may be decided by the National Authority.
TEST WAVFORMS		
Zone 1A		Component A
Zone 1B		Component A with duration increased to give the Action Integral required by Ref [1].
Zone 2B		Component D

Table 508/4 – C9 TEST 9 – Acoustic Shock Wave Test

C.5.6 Dielectric Puncture

To compare different materials or protection schemes the National Authority will sometimes recommend that dielectric puncture tests should be carried out as an 'engineering test' on all dielectric skins covering sensitive equipment or material, or where penetration by lightning currents could present a significant hazard. Dielectric puncture tests will not normally be used as certification tests.

C.6 DIRECT EFFECTS TEST METHODS

Guidance concerning Direct Effects Tests is given elsewhere in this leaflet. Test Waveforms will be found in Ref [1].

ANNEX D

TECHNIQUES FOR LEADER PHASE EFFECTS TESTS AND METHODS

D.1 DIELECTRIC PUNCTURE TESTS

The objective of the tests is to determine whether a lightning attachment to the test object would lead to a puncture of the dielectric or whether the lightning currents would flashover the surface to some conducting part of the skin. The tests should only be used as 'engineering' tests unless otherwise agreed with the National Authority. HV pulses with a slower rate of rise will favour flashover against puncture, while HV pulses having a fast rate of rise will favour puncture.

D.2 SELECTION OF TEST WAVEFORMS

Surfaces will acquire charge due to the high ambient 'quasi dc' E field which often exists before the strike and also due to the rapidly increasing field (above the quasi dc level when present) as the leader approaches.

The rise time of the E field pulse at leader attachment can significantly influence the probability of puncture or flashover of the dielectric. Consequently when assessing the risk of dielectric puncture, it was noted in earlier studies that a 1.2/50 µs pulse should be superimposed on a DC level, this giving time for surface charge to develop and what was thought to be the correct rise time for puncture studies. However, the latest thinking is that the DC level although present in the real environment, is not required for test purposes.

A recent study concerning the mechanisms and attachments to Radomes, has shown, however, that the change of E field is a much slower process than that which would occur with a 1.2/50 µs waveform. Furthermore tests have shown that a radome can be punctured using a slow waveform but cannot be punctured with a 1 µs rise time waveform (Waveform A). Consequently it is now thought that the correct waveform to use for puncture studies is a 200/2000 µs waveform (the so-called switching waveform) without the superimposed DC level.

The pulse generator should be capable of at least 1.0 MV output, although for large test objects voltage outputs of up to 4 MV may be required. A 200/2000 µs waveform should be used which is the 'switching' waveform of High Voltage Testing Techniques. BS 923/IEC 60 Ref [3].

D.3. TEST GUIDANCE

Wherever possible the test objects should be standard production hardware suitably inerted but complete with all structural components. If this is not possible, a full-scale model of the production hardware can be used. In this case conducting structural components can be made from wood or other convenient material covered with aluminium foil to simulate the conducting component, thus ensuring the correct electric field distribution during the tests. The dielectric section however must be production hardware and cannot be substituted. For very large objects, where testing of the complete weapon is impractical, the test object should consist of the dielectric component under investigation plus between 1.5 and 2 metres of the actual or simulated structural components adjacent to or surrounding the dielectric component. All conducting components under the dielectric skin must be included, either as production hardware or simulated components i.e. Antenna or Radar scanner assemblies.

D.4 DIELECTRIC PUNCTURE TEST

The test requirements are as follows:

a. A high voltage pulse generator shall be used for the tests, being capable of operating in either polarity. The pulse generator shall have a 200/2000 µs wave shape. The generator shall have an output voltage of at least 1 MV.

b. A diagram of the test arrangement is given in **Figure 508/4 – D1**.

c. The chosen voltage for the generator shall be such as to produce the required the voltage to give the 90% probability of breakdown across the test gap (V90 voltage) at the desired polarity.

d. All conducting structural components and equipment in or on the test object shall be electrically bonded to the earth plane.

e. A rod electrode of between 8 mm and 15 mm diameter, connected to the high voltage output terminal of the generator, shall be placed at a distance from the test object. The gap between the electrode and the dielectric surface under test shall be 1.5 metres, or 1.5 times the maximum flash-over distance across the dielectric surface, whichever is the greater.

   The electrode shall be capable of being placed in different positions around the test object, or alternatively the test object must be capable of being rotated under a fixed electrode so that different sections of the dielectric surface are presented in turn to the test electrode.

f. Between 5 and 10 discharges of both polarities shall be made in each position of the electrode (or test object).

g. A complete record of all discharges shall be made which shall include:

   1. Oscillograms of the discharge voltage for all discharges, including those which did not break down the gap.

   2. Still photographs of each discharge taken simultaneously from not less than two positions to enable assessment of the attachment position.

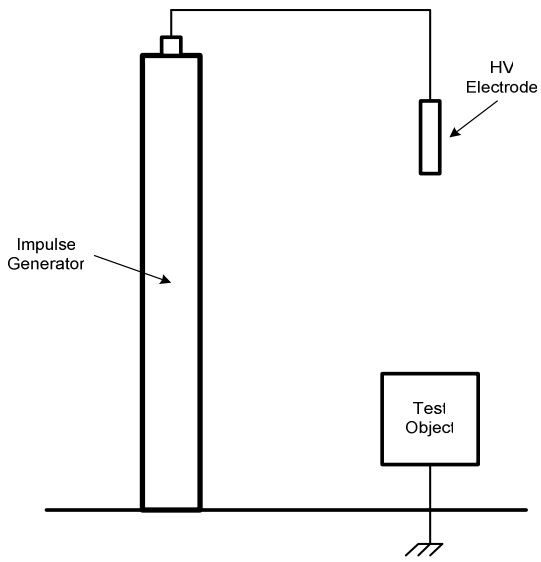

Figure 508/4 – D1 Diagram of the Set-up for Dielectric Puncture Tests

ANNEX E

LIQUID EXPLOSIVE & FUEL – HAZARD ASSESSMENT AND DESIGN

E.1 INTRODUCTION

This Annex gives background to some of the design problems to obviate lightning related liquid explosives (including propellant) and fuel hazards and gives some assessment and test guidance. For convenience the term 'fuel' is often used in this annex and is synonymous with liquid propellant and explosives unless otherwise indicated. Although most of the requirements were originally written for aircraft design and testing, these still apply to some weapons.

E.2 HAZARD MECHANISIMS

Fuel hazards can arise in integral fuel tanks and in other locations, where fuel or its vapour may be exposed to the effects of a lightning strike. Fuel ignition can result from burn through of the fuel tank skin; hot spot formation; puncture of a CFC skin by arc root damage, or by acoustic shock wave; puncture of a dielectric tank skin; thermal or voltage sparking. Thus the mechanisms of ignition include Direct and Indirect Effects and in a fuel tank can vary with the method and material used for its construction.

Fuel tanks made of dielectric material usually contain metal parts such as brackets, pipes, drain valves, connectors and wiring and these may become centres of electric stress as a lightning leader approaches. This stress may be sufficient to cause breakdown of the dielectric skin, resulting in puncture or shattering; thus fuel is spilled and may be ignited.

It should be noted that even a nominally empty tank would contain sufficient residual fuel to produce a combustible mixture in the tank. A partially empty tank may also have an explosive fuel/air mixture in the ullage above the fuel and it is necessary that internal pipe work, bonding and electrical wiring be correctly designed and installed so that sparking and arcing does not occur.

Dielectric tanks may be protected from puncture by a thin metal coating, or by a framework of metal strips bonded to the airframe, which preferentially "attract" the lightning discharge and divert it to the airframe. It may be necessary to do a dielectric puncture test when assessing the lightning protection.

In aluminium alloy tanks situated in Zones 1 or 2 the main hazard depending on skin thickness is burn-through of the skin at a lightning attachment point, although hot spots can also be a problem with tanks constructed with high melting point alloys, such as titanium. The sparking hazard in a metal tank is generally low because the good conductivity of metal keeps most of the lightning current on the outside, but the possibility has to be considered, especially for high melting point alloys, which have a lower conductivity than aluminium. Also access doors and complex construction can cause problems.

CFC tanks present a variety of hazards. Because of the nature of the erosion at the arc root, purely thermal burn-through is less likely than with metal and generally the arc root does not penetrate more than 5 plys but a hot-spot hazard is more likely. Moreover the mechanical properties of CFC make it more likely to be damaged by acoustic shock. Above all, the high resistively of CFC means that its electrical skin effect is low, so that voltage gradients on the inside of the skin are high and a substantial proportion of the skin current can penetrate to the interior, giving a high sparking hazard. Protective measures such as a metal coating on the skin will thus almost certainly be needed and it will be necessary to confirm their effectiveness, probably by testing for all hazards.

E.3 FUEL CHARACTERISTICS and CRITERIA for EXPLOSIOIN or COMBUSTION

E.3.1 Fuel Characteristics

All potentially ignitable fluids and vapours including for example oils and hydraulic fluid must be considered when considering lightning strike hazards. Not only must hazardous vapour air mixtures that normally occur be considered (for example the fuel vapour air mixture in the ullage space of a fuel tank) but also where such vapours could form in otherwise dry areas due to seepage and leakage.

It is fuel, however, that causes the most problems and the subject of aviation fuel flammability is complex. Complicating parameters are the oxygen enrichment of the fuel/air vapour due to dissolved oxygen in the fuel being released at altitude, and the formation of mist within the tank which may render flammable vapour space which would normally be considered too weak in vapour to ignite (Minimum Ignition Energy - MIE).

E.3.2 Fuel Vapour / Air Explosion Limits

The Lower Explosive Limit (LEL) or "flashpoint" of a fuel occurs when the percentage volume of fuel vapour to air is just sufficient for ignition to occur - about 1.3% for Avtur at ground level pressure. The upper explosive limit (UEL) occurs when the fuel vapour air ratio is just sufficient to give an over rich situation, and prevent combustion - about 7.9% for Avtur at ground level pressure. These limits depend on fuel temperature and air pressure.

Fuel misting, for example due to condensation when a tank is cooled, will lower the LEL. Oxygen enrichment, due to dissolved air in the fuel outgassing as altitude increases, will raise the limits Operation of booster pumps will also cause oxygen enrichment and normal weapon vibration can cause misting.

The maximum energy of an explosion occurs when the mixture is stoichiometric (that is a mixture where there is just sufficient air to give complete combustion - for Avtur at ground level about 4% vapour concentration).

From the above it will be seen that apart from the need for an ignition source there are several factors which will decide whether or not an explosion would occur in a tank and the strength of that explosion if it occurs.

E.3.3 Minimum Ignition Energy Levels (MIE)

Obviously for a fuel vapour mixture to explode it must be ignitable, that is the temperature of the fuel and the pressure of the air above it must be within the explosion limits discussed above. However the spark energy, required to ignite such a mixture varies with the mixture strength. It is least at a certain stoichiometric ratio which for Jet A (AVTUR) is approximately 2. The least energy is known as the "minimum ignition energy". It is measured by finding the minimum electric spark energy that will just ignite the mixture. Minimum ignition energies increase with altitude and decrease with oxygen enrichment. The level varies for different hydrocarbons but usually lies between 0.2 and 0.3 mJ at normal (21%) oxygen concentration (at one atmosphere pressure). At 35% oxygen, the minimum ignition energy is about 5 times lower,

It's thought, that the value of 0.2 mJ is acceptable for munitions and this value is used here.

The probability of ignition at the minimum ignition energy is very low. For example the minimum ignition energy of Propane is 0.2 mJ but the probability of a single such spark causing ignition is < 0.1%. Similar figures at 21% oxygen also apply to fuel vapour.

E.3.4 Thermal Sparking

It is virtually impossible to quote an acceptable energy value for thermal sparking, but the methods available to detect 0.2 mJ voltage sparks are sensitive enough to detect thermal sparks.

E.3.5 Ignition Criteria

As noted in **Clauses E.3.2** and **E.3.3**, whether or not an explosive mixture occurs depends on several factors but for the purpose of this specification it is assumed that such a mixture can always occur and that therefore fuel hazard assessment must show that all ignition sources have been avoided.

Therefore it is necessary to demonstrate that arc penetration, hot spots, internal arcing and sparking do not occur. Sparking is the most difficult of those mechanisms to eliminate and demonstrate its absence.

The absence of sparking can be demonstrated either by a sparking test or a Flammable Gas Test (see **Clause E.5.4**). A sparking test is usually preferable, as it is generally a simpler test to do than a Flammable Gas Test. Moreover the detection of sparking is a more discriminating test able to provide

information on the location of the sparks and therefore assisting in remedial design measures in contrast to the crude pass/fail nature of the Flammable Gas Test. However there will be occasions when the latter test is the only way to demonstrate the absence of sparking.

E.4 FUEL and LIQUID EXPLOSIVE HAZARD ASSESSMENT and TESTS

E.4.1 Assessments

When making fuel hazard assessments it should be remembered that such hazards are not limited to areas where there is obvious current flow between lightning attachment points, as currents decided by the laws of electro-magnetic induction will flow on the remainder of the vehicle. Hence, for example, current would cross the tank pylon interface of an aircraft pylon mounted wing tank when there is a lightning attachment to the wing and the tail of the aircraft, without a direct attachment to the tank. Also a voltage sufficient to cause sparking in the contents monitoring system could occur due to induction to that part of the fuel system wiring contained in the fuselage, due to lightning current flow in the fuselage.

If the approved test plan includes testing for such a situation the test arrangement will need to include an adjacent conductor through which the test current shall be passed instead of the test object itself.

E.4.2 Thermal and Voltage Sparking

Thermal sparking is that phenomena whereby small incandescent particles of material are ejected from the surface of a conductor, due to current concentrations forming hot spots together with the resultant magnetic forces acting in the area concerned. Almost certainly small arcs also occur and generate high pressures, which tend to blow out the particles. The current concentration may be caused by limited contact areas at the junction of two conductors or by acute changes in geometry in a single conductor.

Because the sparking is thermal, the appropriate test waveforms are those with high peak current and high Action Integral, namely Components A and D.

Thermal sparks are usually more significant for fuel ignition as that is the predominant sparking mechanism for Direct Effects and in practice the sparks which occur within a fuel tank are almost always thermal.

Voltage sparking occurs when the flow of current produces a voltage difference between two conductors, which rises to a value high enough to break down the intervening medium, whether this is air or other dielectric. It can arise inductively in a loop or bend in a conductor, by flux coupling to an adjacent conductor, or from the resistive drop in a high resistance material such as CFC. Voltage sparking is a function of rate of change of current (inductive) or of peak current (resistive voltage gradients) and the appropriate test current is therefore Waveform D.

In practice a combination of thermal and voltage sparking will often occur and the test waveform used to investigate such combined sparking must contain the parameters important for both mechanisms.

E.4.3 Sparking Detection

As noted above the occurrence of sparking is detected either by a "sparking test" or by a Flammable Gas Test. This paragraph gives background on the optical methods of detecting sparking. Sparking may be detected by employing either a still camera or light-sensitive transducers (**Clauses E.5.7.1** [Method A] and **E.5.7.2** [Method B]). In either case, the detectors shall be positioned so that they cover all possible sparking locations; this may be achieved by the use of a sufficient number of detectors or by a system of mirrors or by repetition of the tests with the detectors in different positions (but see **Clause E.5**). The field of vision shall be completely shielded from all light and tests shall be made to confirm this. Care shall be taken to ensure that the detectors themselves do not create a possible sparking location, if for example they are inside a fuel tank.

Low energy voltage sparks and incendive thermal sparks are very dim and photographic techniques need to be sensitive to detect them. The film speed should be not less than ASA.3000 and the aperture size should be not less than that corresponding to F4.7. Also, because of the smallness of the sparks and the fineness of the thermal particle tracks, the actual image size is important and so therefore is

the type of lens. This means that shorter focal length lenses have to be closer to the light source for the same sensitivity (see **Table 508/4–E1**).

Arrangements shall be made to demonstrate that during each test the camera was capable of recording sparks if they had occurred, for example that the shutter had not inadvertently been left shut. This may be achieved by arranging for a low level light source to be in the field of vision, but care shall be taken that this cannot be confused with a spark and that it does not interfere with the recording of any sparks. The light source, which can conveniently be provided by a fibre optic cable, must briefly illuminate each time the camera shutter is opened. Two such sources aid the location of sparking. A procedure shall be followed that locates any sparks as exactly as possible; for example if sparking is so intense as to completely over-expose the film then the test shall be repeated with the camera aperture adjusted to a lower sensitivity.

When light-sensitive transducers (photomultipliers) are used, light from possible sparking sources may be conveyed to the transducers by means of optical fibres (Method B **Clause E.5.7.2**). The sensitivity of the transducers and the associated optical fibres shall be not less than that specified for still camera systems. A photomultiplier/ fibre optic arrangement can provide greater sensitivity than a camera system and may be used as the prime means of detecting sparks. It is very useful when a camera would have a restricted field of view and is sometimes the only method available, for example when looking for sparking inside a fuel pipe.

E.4.4 Flammable Gas Tests

As has already been mentioned, the Flammable Gas Test is a method of checking for sparking and should not be regarded as an attempt to simulate actual explosive conditions. Explosion tests using an aircraft fuel vapour/air mixture have sometimes been used in the past as pass/fail criteria but are unreliable due to the statistical nature of ignition and the difficulty of obtaining the correct mixture strength.

As has already been noted, in a fuel air vapour mixture, a 0.2 mJ voltage spark corresponds to approximately 0.1% probability of ignition at normal pressure and oxygen concentration. In an ethylene air mixture of 1.4 times richer than stoichiometric gives a greater than 50% probability of detecting a 1.6 mm long 0.2 mJ voltage spark.

Hence ethylene in that mixture ratio is a preferred gas for spark ignition testing including thermal sparking. However, more recently, Hydrogen/Argon/Air mixtures have been used and are more sensitive to sparks below 0.2mJ, therefore a more repeatable flammable mixture for this type testing. Propane, which has sometimes been used only gives a remote probability of detection and therefore is not recommended.

A Flammable Gas Test must always be used when there is any doubt of detecting sparking by other means. The test is usually used on major assemblies although of course it can also be used with part assemblies and panels by constructing a gas cell over the fuel side of the test sample.

The test can also detect small hot spots and may be necessary to show that hotspots on the inside of a titanium panel are acceptable. The mixture should be obtained by continuously mixing the gas and air (as in a welding torch) and should be checked for flammability by passing it through a test cell and obtaining ignition with a calibrated 0.2 mJ spark source before it is allowed to flow into the test object.

When that has been done the mixture should flow through the test sample until ignition of the outflow mixture is consistently obtained in the test cell. Immediately before and after each test shot both the inflow and outflow mixture should again be proved flammable, except that there is obviously no need to prove the outflow mixture if ignition occurred during the test. If ignition of the outflow mixture does not occur after a test, that test is invalid and must be repeated after the mixture has been corrected and the outflow again gives ignition.

E.5 REQUIREMENTS FOR ENERGETIC MATERIAL HAZARD ASSESSMENT TESTS, LIQUID EXPLOSIVES, PROPELLANTS AND FUELS

E.5.1 Introduction

This part of the Annex defines the requirements, which must be met when hazard assessment tests are made on liquid explosives and fuel. When such tests are specified as part of the LHDA they shall be selected from the tests listed in this leaflet and included in the Test Plan. It should be noted that all energetic material should be removed before these tests are made, except the gas mixture that is used for the Flammable Gas Tests.

E.5.2 Arc Root Tests

Arc Root Tests shall be in accordance with the relevant paragraphs of **Annex C Tables 508/4–C1** to **508/4–C9**.

E.5.3 Sparking Test

E.5.3.1 Test Requirements

a. The general requirements of this leaflet shall apply.

b. The test sample may be a panel, a propellant or fuel system component (such as a filler cap), a section of structure (such as part of a propellant tank), or a section of an assembly, or a complete major assembly (such as a propellant tank or a liquid explosive enclosure). When the former are used they shall be mounted in a light tight box so designed to ensure compliance with c. and able to accept the spark detection instrumentation noted in g. Modifications to major assemblies for the installation of spark detecting equipment shall also be made in such a way that the requirements of (c) are satisfied.

c. The test current attachment points and the design of the return current conductor configuration shall be as noted in the Test Plan. This shall define the lightning current paths through the test object so that the current distribution corresponds as nearly as possible to that which is likely to result should an actual lightning strike occur. It may be necessary for more than one current path to be tested corresponding to different sets of lightning attachment points on the weapon, should it be impossible to define one set of attachments that give a worst case current distribution.

   The test current connections shall be hard wired to the test object except that an open arc shall be used when localised high current densities are required (e.g. to a fastener), or when this test is combined with an arc root damage test.

d. When an open arc is used it shall not be less than 50 mm long and should be initiated by a fine wire, not exceeding 0.1 mm diameter. The wire may be either metallic (e.g. copper) or carbon fibre. A Jet Diverting Electrode is not needed unless arc root tests are being made.

e. The test arrangement shall be referred to earth potential at one point only.

f. A record shall be made of the arc voltage and the arc current on a common calibrated time base, so that the relationship of voltage and current with respect to time can be determined.

g. Spark detection equipment shall be installed and any sparking that occurs during the tests detected by either method defined in **Clauses E 5.7.1** or **E.5.7.2**, or a combination of both methods, as defined in **Clause E.5.7**. Equivalent methods may be used by agreement with the National Authority.

h. Tests for sparking may be included in tests for other failure mechanisms where test currents with high Action Integrals are employed provided that all the requirements for all the tests are observed (see **Clause E.5.5**). Direct Effects sparking tests may also be combined with the measurement of induced voltages on wiring inside the test object and the detection of sparking due to those voltages, provided that the special requirements of **ClauseE.5.5** are met.

The Test Waveform shall be as noted in **Clause E.5.5**.

E.5.4 Flammable Gas Test

E.5.4.1 Test Requirements

a. The general requirements of this leaflet shall apply.

b. The test sample will generally be a complete major assembly such as a propellant tank or a complete 'wet wing', although panels, propellant system components or sections of an assembly may also be tested. When the latter is so the 'propellant side' of the sample shall be enclosed in a gas-tight cell provided with 'blow off' panels. Major assemblies shall also be modified to incorporate such panels. The gas cell or major assembly shall have provision for a continuous flow of the prescribed gas/air mixture (see (c)) through it. A test cell, fitted with a calibrated spark source (see (d)) to allow the ignitability of the gas/air mixture to be proved, shall be arranged so that both the inflow and outflow test sample mixture can alternatively flow through the cell. The blow off panels, spark source and gas/air supplies shall be installed in such a way that the requirements of (e) are met.

c. There shall be 'continuous flow mixing' of the gas and air and the mixture shall flow through the test sample until the out-flowing mixture continuously has the correct composition and is shown to be ignitable.

   The exhaust mixture from the test sample should be collected or safely vented. Areas external to the sample where leakage could occur should be sealed to atmosphere and continuously purged with nitrogen.

d. The calibration spark source shall be a gap to give a spark discharging a suitable value capacitor charged to a voltage such that the energy stored immediately before flash-over of the gap is 0.2 mJ + 10%.

e. The test current attachment points and the design of the return current conductor configuration shall be as noted in the Test Plan. This shall define the lightning current paths through the test object so that the current distribution corresponds as nearly as possible to that which is likely to result should an actual lightning strike occur. It may be necessary for more than one current path to be tested corresponding to different sets of lightning attachment points on the weapon should it be impossible to define one set of attachments that give a worst case current distribution. The test current connections shall be hard wired to the test object except that an open arc shall be used when localised high current densities are required.

f. When an open arc is used it shall not be less than 50 mm long and should be initiated by a fine wire, not exceeding 0.1 mm diameter. The wire may be either metallic (e.g. copper) or carbon fibre. A Jet Diverting Electrode is not needed.

g. A record shall be made of the test current on a calibrated time base, so that the total Action Integral of the test current may be determined. The voltage across the load may also be recorded on a common calibrated time base (when hard wire connections are used) as an aid to the analysis of the test results, (see **Annex B**).

h. Simulated lightning discharges shall be made to the test object. Using the test cell and spark source, both the inflow and outflow mixture shall be checked immediately before and after each shot. Tests shall not be made if the mixture fails to ignite before an intended shot. If it fails to ignite after a shot, that test shall be ignored and repeated.

The Test Waveform shall be as noted in **Clause E.5.5.**

E.5.5 Test Waveforms

The test current waveforms shall be selected from those defined in **Table 254-4** of Ref [1] according to the lightning attachment Zone of the test object.

When voltage sparking is also being evaluated the initial rate of rise shall be as defined in Waveform D. Alternatively a second test shall be made using Component D with a maximum di/dt as defined in Ref [1] for Air or 1 x 10^{11} A/s for Ground.

When it can be shown that only voltage sparking will occur, Waveform D shall be used. When it can be shown that voltage sparking will not occur, Components A or D without a specified initial rate of rise may be used.

When it can be shown that the test object as a whole will never be subjected to the full current of a lightning strike, the test current amplitudes may be scaled down proportionately.

When tests for other failure mechanisms are being conducted in the same series of tests, then either the appropriate waveforms for the different mechanisms shall be applied in separate tests or waveforms which adequately test for all the mechanisms simultaneously shall be chosen, in agreement with the National Authority.

When sparking and flash-over in propellant system wiring is being evaluated, the lightning current test waveform shall be Component D, with an initial rate of rise of current as defined above and di/dt exceeding 0.25 x 10^{11} A/s for more than 0.5 µs.

E.5.6 Conditioning Of Test Sample By Repeated Testing

It should be noted that the repeated passage of high current through a joint reduces the tendency for that joint to spark. The number of simulated lightning discharges or shots applied to each test sample shall therefore be limited to take this into consideration and unless otherwise agreed with the National Authority shall be limited to 4 shots. For tests which involve both conduction and arc attachment shots, the conduction shots shall be made first.

E.5.7 Methods of Detecting Sparking

The spark detection methods given below have been developed to detect sparks down to an energy level of 0.2 mJ. They will also detect thermal sparks, which are capable of igniting an explosive liquid propellant/air mixture or fuel/air mixture.

E.5.7.1 Method A: Photographic

This relies upon the use of photography with film speeds and exposure times sufficiently sensitive to record voltage sparks down to 0.2 mJ and thermal sparks capable of igniting an explosive liquid propellant/air mixture.

Suitable cameras shall be positioned in the light-tight enclosure in which the sample is mounted, or in the major assembly (if necessary in apertures cut into it), so that all possible sparking sources are viewed. To facilitate that and to limit the number of cameras, a fish eye lens or a system of mirrors may be used, provided due allowance is made for the reduction in sensitivity that will so occur. Alternatively the test may be repeated with the sensors in different positions although this is not recommended.

Film speeds shall not be less than ASA 3000 and the lens aperture size shall not be less than that corresponding to F 4.7.

The field of view shall not be wider than one metre and the maximum distance, depending on the focal length of the lens, shall be according to the following:

i.	8 mm (fish eye)	---	300 mm
j.	16 mm (fish eye)	---	500 mm
k.	28 mm (fish eye)	---	1 m
l.	50 mm (fish eye)	---	2 m

The field of vision of each camera shall be completely shielded from all ambient light and a test exposure shall be made with each camera to prove it.

All possible sparking sources shall be temporarily illuminated and each camera carefully focused and a record made of each field of view, to enable any sparking recorded during the test to be referred to its origin. If two fibre optic 'spots' are used, the position of sparks is more readily determined.

A small light source (which can conveniently be provided by a fibre optic cable), which illuminates briefly, immediately before or during the application of the test current, shall be provided in the field of view of each camera. This will demonstrate that they are capable of recording sparks if they occur. A photographic record shall be made of the position of each of the light sources immediately following the record made.

Care must be taken that a light source cannot be confused with a spark and that it does not interfere with (e.g. shield from view) the recording of any sparks. Care must also be taken that the cameras do not themselves create a source of sparking.

When tests are made, a procedure shall be followed that locates any sparks as exactly as possible. For example, if sparking is so intense as to completely over-expose the film, not withstanding the film speed of ASA 3000 and lens aperture F 4.7 the test shall be repeated with the camera aperture adjusted to a lower sensitivity.

E.5.7.2 Method B: Photomultiplier

This method relies upon a combination of photomultiplier sensors and supporting cameras - the former to detect and provide a time history of the sparks and the latter to give an indication of the location of the sparks.

A photomultiplier tube shall be arranged in a remote screened enclosure and linked to all possible sparking sites with fibre optic cables. Each fibre optic cable and photomultiplier combination shall be calibrated to demonstrate sensitivity to a 0.2 mJ voltage spark.

Cameras sufficient to give a general view of the test object shall be installed in accordance with the above. They may be omitted, by agreement with the National Authority, in areas where they would be unduly difficult to install.

ANNEX F

REQUIREMENTS FOR ENERGETIC MATERIAL HAZARD ASSESSMENT TESTS, SOLID EXPLOSIVES

F.1 INTRODUCTION

This Annex defines the requirements, which must be met for hazard assessment tests on solid explosives and especially on Whole System or Part System Tests.

F.2 SELECTION OF TESTS AND NUMBER OF SAMPLES

F.2.1 General

Tests to be used for the assessment of hazards to solid explosives shall be selected from **Table 508/4–2**. When Whole System Tests, either Part, Live or Complete and Part System Tests are required they shall be made in accordance with **Clauses F 4** and **F 5** on a complete weapon. The other tests listed in **Table 508/4–2** may be made on made on appropriate parts of the weapon, or the complete weapon, as agreed with the National Authority. The requirements for such tests shall be as defined in **Annex C**.

F.2.2 Number of Test Samples Required

Where Whole System (Complete or Part Live) or Part System Tests are made, a sufficient number of samples shall be tested to ensure that the weapon is insensitive to the effects of lightning to reliability and confidence required by the National Authority.

F.2.3 Concerning EIDs

Where the LHDA has shown that there is a risk of a lightning initiation of an EID which would result in a safety hazard (or loss of use where continued functioning is required), tests shall be conducted with EIDs fitted to the system in accordance with Note 2 and 3 of **Table 508/4–2**. The EIDs shall either be live or inert and instrumented.

It is recommended that instrumented EIDs should be used whenever possible to extrapolate measured results and determine safety margins.

F.3 WHOLE SYSTEM TEST

Due to the complication and expense of providing blast enclosures and special portable lightning generators, Whole System Tests shall be avoided whenever possible and only used when the evaluation can be made in no other way. Unless however, it can be shown that such a test is the most cost effective. Whenever possible a Part Live Whole System Test shall be made in preference to a Complete Whole System Test.

F.4 REQUIREMENTS FOR WHOLE SYSTEM TESTS

The general requirements of this leaflet shall apply. The test item shall be arranged in a co-axial or quasi co-axial return conductor system, enclosed in a blast-proof structure. Systems capable of going propulsive shall be adequately restrained. A portable lightning generator shall be arranged, together with diagnostic equipment, immediately adjacent to the blast enclosure. The test current path from the generator shall be a continuation of the return conductor system.

F.4.1 Assessments

The test current attachment points and the design of the return current conductor configuration shall be as noted in the Test Plan. This shall define the lightning current paths through the test object so that the current distribution corresponds as nearly as possible to that which is likely to result should an actual lightning strike occur. It may be necessary for more than one current path to be tested corresponding to different sets of lightning attachment points on the weapon, should it be impossible to define one set of attachments that give a worst case current distribution. The current connection to the

test object shall be defined in the Test Plan. This shall be by means of a hard wire connection, except that an open arc shall be used when localised high current densities are required (e.g. to a fastener), or when arc root damage is the hazard mechanism. The comments of **Annex E Clause E.4.1** also apply to Solid Explosives.

When an open arc is used it shall not be less than 50 mm long and should be initiated by a fine wire, not exceeding 0.1 mm diameter. The wire may be either metallic (e.g. copper) or carbon fibre. A Jet Diverting Electrode is not needed unless arc root tests are being made.

The test arrangement shall be referred to earth potential at one point only.

A record shall be made of the test current on a calibrated time base, so that the total Action Integral of the test current may be determined. The voltage across the load may also be recorded on a common calibrated time base (when hard wire connections are used) as an aid to the analysis of the test results. Test Waveform shall be as noted in **Clause F.6**.

Tests shall be made at increased threat levels, starting at 'half full threat' then continuing towards the full threat, until a reaction occurs or full threat is reached without a reaction.

F.5 REQUIREMENTS FOR PART SYSTEM TESTS

The general requirements of this leaflet shall apply. The test item shall be arranged in a co-axial or quasi co-axial return conductor system. The requirements of **Clauses F.4.1** shall apply. The Test Waveform shall be as noted in **Clause F.6**.

F.6 TEST WAVEFORMS

The test current waveforms shall be selected from those defined in **Table 254-8** of Ref [1] according to the lightning attachment Zone of the test object, as follows:

m. When it can be shown that only voltage sparking will occur, Waveform D shall be used. When it can be shown that voltage sparking will not occur, Components A or D without a specified initial rate of rise may be used.

n. When sparking and flash-over in propellant system wiring is being evaluated, lightning current test waveform shall be Component D, with an initial rate of rise of current of 2×10^{11} A/s for Air side or 1×10^{11} A/s for Ground and di/dt exceeding 0.25×10^{11} A/s for more than 0.5 µs.

ANNEX G

TECHNIQUES FOR EQUIPMENT TESTS

G.1 DETERMINATION OF TRANSIENTS TO BE APPLIED TO EQUIPMENT

G.1.1 When Transient Control Levels are 'Not Known'

In the early stages of development before TCLs are known, for the purpose of designing and testing equipment against the effects of transients it is necessary to formulate a standard set of waveforms which are most likely to represent the threat.

This is necessary because equipment has to be developed simultaneously with the weapon itself. It is impossible for the equipment design to wait until the weapon has been developed and its transients measured in a simulated lightning test. The waveforms applicable to the equipment are therefore based on experience of measured transients in simulated lightning tests on aircraft, supplemented by the in-flight information available and from previous similar design lightning testing.

Although the waveform shapes are standard, the amplitudes were chosen according to equipment categories, which depend on how critical the operation of the equipment is for weapon flight safety and on the electromagnetic environment of the equipment (shielded or exposed location). Four standard voltage waveforms given in Ref [1] are at present employed, namely:

a. A Long Pulse (LP) simulating diffusion/redistribution coupling (LP waveform)

b. An Intermediate Pulse (IP) simulating resistive coupling (the IP waveform)

c. A Short Pulse (SP) which is the differential of (b) simulating aperture flux coupling (SP waveform

d. Damped Sinewave (DS) oscillations in the frequency range 2 to 50 MHz (the DS waveform)

Several amplitude levels are specified for each waveform (except DS waveforms) according to the equipment category. When that category is decided for a new equipment the appropriate level then becomes the Equipment Transient Design Level (ETDL) to which the equipment is initially qualified.

G.1.2 When Transient Control Levels are 'Known'

When TCLs have been established by the analysis and tests required in this leaflet, the margin between those TCLs and the initial test or selection ETDLs is ascertained. If that margin for any equipment interface is less than the agreed value, that equipment must be re-qualified to the higher levels. If the equipment then fails at that level, either additional equipment hardening must be incorporated, or measures taken to reduce the relevant TCL. Alternatively, if the equipment has not previously been tested, the test current limits are given by the TCLs plus the agreed margin.

G.2 BULK CABLE INJECTION

Bulk cable injection methods are used for the damped sine wave injection test whereby transients are injected into each cable bundle in turn by close coupling to a pulse generator through a pulse transformer injection probe. The transformer core is usually made of ferrite and the cable itself forms the secondary. Each end of the cable being injected should be connected to the appropriate equipment but it is not essential for the entire system to be connected for all cable injections (unless malfunctions cannot be monitored without the whole system being operative). All types of connection whether power supply or control and signal lines, should be included. The probe has of course to be designed to operate over the frequency spectrum of the transient being applied and attention has to be paid to both its voltage and current rating.

The open- circuit voltage being injected is measured by means of the voltage induced in an additional single-turn coil around the magnetic core of the probe. The injected current is monitored by means of a separate monitoring transformer probe placed around the cable. Current transients in other cables of the system (or at different points in the same cable) may be monitored with additional probes if required. It is often advisable to do that to ensure that such cables are not over-tested.

As indicated in **Clause G.1** for the test to be a true representation of weapon conditions, it has to be performed at a late stage of development when the cable installation details are known. However, in default of the actual cables, tests with 'standard' cables may be usefully employed to detect equipment susceptibilities at an early stage of development.

G.2.1 Damped Sinusoids

For a given level of injection with sinusoidal currents (whether damped or not) the voltage actually reaching critical components in the equipment under test is often highly sensitive to frequency because of the natural resonances of the system formed by the equipments and inter-connecting cables **Figure 508/4–G1** shows a typical result and sharp resonances are evident. For this reason, tests at small frequency intervals over a wide range should be employed and the selected test frequencies should include those corresponding to maximum and minimum cable impedance (denoting system resonances). These are determined by swept frequency Carrier Wave (CW) tests carried out previously, possibly as part of EMC testing. Also, if EMC CW testing has shown equipment susceptibilities at certain frequencies, those frequencies should also be included in the damped sinusoid lightning tests.

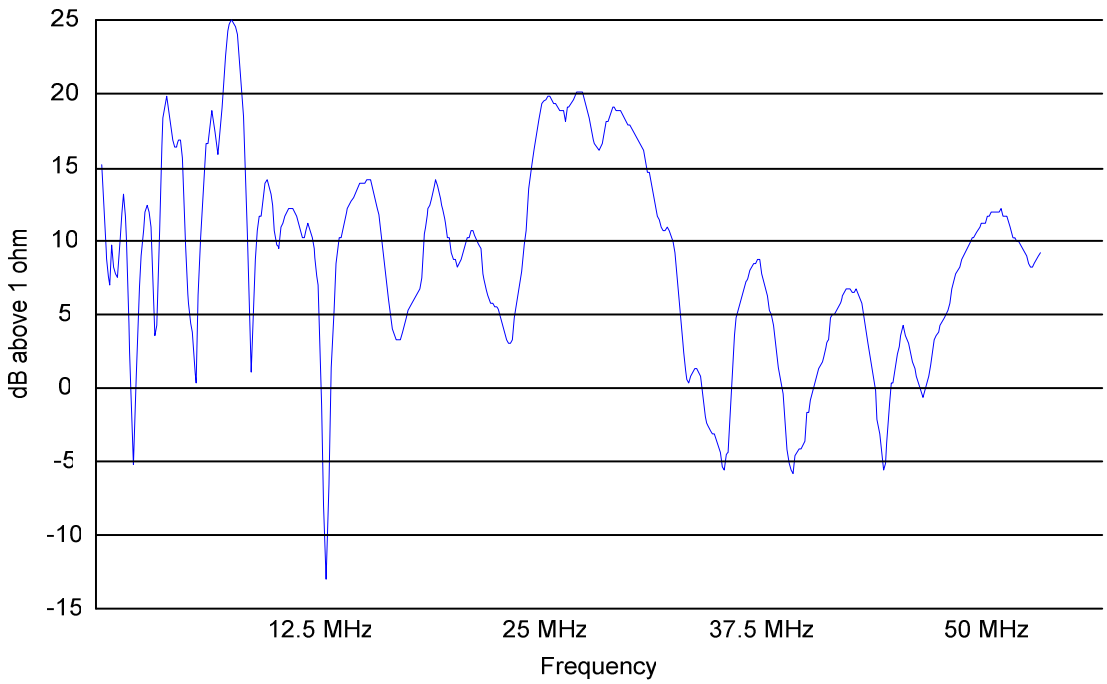

Figure 508/4 – G1 Curve Showing Typical Cable Bundle Current to Pin Voltage Transfer Function

When TCLs are not known, the amplitude of the injected transient must be selected according to the input impedance of the cable at the test point. A fixed voltage would produce excessive current into a low impedance and a fixed current would produce an excessive voltage into a high impedance.

The limits (maximum peak induced current, maximum probe loop voltage and the maximum volt-amp product) are specified in **Table 508/4–G1** and **Figure 508/4–-G2**. The injected level is initially low and is then raised to whichever limit is reached first. If susceptibilities (upsets) are noticed before a test limit is reached, the threshold of susceptibility is recorded and the test continued.

G.2.2 Long, Intermediate and Short Pulses: Ground Voltage Injection

In principle the cable injection method by means of a transformer type probe similar to that employed for damped sine waves could also be used for the long and short lightning pulses. However, because of the low frequency content of such pulses the design problems for the probe would be very great and an alternative method of injecting the transient is therefore required. One method, which does not employ an injection probe, is ground voltage injection, which also has the characteristic that it corresponds fairly closely to two of the mechanisms (resistive and diffusion / redistribution coupling) by which transients are injected in actual lightning strikes.

In this method, a generator producing a transient voltage of the desired shape is connected between the ground plane and the case of the equipment under test, as illustrated in **Figure 508/4–G3**. This corresponds closely to resistance coupling where a portion of the lightning current in an actual strike passes along the ground plane connecting two pieces of equipment, producing a potential difference proportional to the current and the resistance of the ground plane. If we consider a two- wire circuit (unscreened) connecting the equipments, then this voltage will appear as a common-mode voltage between the circuit and the case, the voltage relative to case at each end of the wire-pair depending upon the local impedance to case. If the connecting cable between the two equipments has an overall screen connected to case at each end, then the impedance of the loop will be low and the current that flows around the loop will effectively be limited only by its inductance.

In an actual lightning strike, resistance coupling is not the only mechanism by which long, intermediate and short lightning pulses may be injected. Magnetic coupling may also occur producing a voltage proportional to the rate of change of the magnetic flux. Even here, however, the ground voltage injection test is reasonably realistic provided the output impedance of the transient generator (which is inserted between the equipment case and the ground plane) is not too high.

Ideally the long and intermediate pulses should be unidirectional but limitations of the pulse generator design usually mean that the waveform crosses the zero line at some point; this is not important provided the time to reach cross-over is sufficiently long.

The ground voltage test is probably the most practical way of applying the long and short lightning pulses and it is therefore generally accepted, but there are possible disadvantages. As mentioned, the impedance of the pulse generator may reduce the realism of the coupling mechanism and cause the pulse shape actually applied to be different for different loads. The insertion of this impedance could also interfere with normal operation of the system, a possibility, which has to be checked before transients are applied. The design aim should be to keep the output impedance of the generator low (probably less than 0.5 Ohm) over the frequency range of the pulse and even lower for DC.

Before TCLs are known, the initial amplitudes to be applied to equipment are decided by the criticality of the function of the equipment and the degree of shielding of its location in the weapon. Limits are set on both voltage and current, and the amplitude of the transient is raised until one of the limits is reached. It is important to test with transients of each polarity relative to ground.

It is also important that equipment should be progressively tested up to the ETDL.

G.3 CHARACTERISTICS OF THE PULSE GENERATOR

The load presented to the pulse generator can vary widely, depending on the system under test, and the generator should therefore be designed to provide substantially the same waveform into this range of loads. This implies a low output impedance, which is desirable also for other reasons. In the case of transformer injection, the load on the generator of course includes the characteristics of the injection transformer.

The generator has to be capable of delivering the maximum specified voltage and current, including the case of both limits being reached simultaneously, unless there is an overriding volt-amp limit. The output amplitude should be smoothly adjustable and so should the frequency in the case of the damped sine-wave generator. Either polarity relative to ground should be available by means of a simple adjustment.

It is desirable that the generator should have means for external triggering (to synchronise the transient with some event in the system under test) and for controlling the point of application of the pulse on AC power lines with respect to the phase of the AC waveform. There should also be a pulse repetition mode with selectable repetition rate.

Usually the transient is formed directly at the required high voltage level by charging a capacitor to a suitable voltage and then discharging it into a network of inductors and resistors. However another possibility is to form the transient at a low level and then pass it through a power amplifier.

G.4 PROVISION OF EQUIPMENT FOR TEST

Equipment must always be tested in association with at least one other equipment and sometimes with the complete system. This arrangement of more than one-piece equipment is known as the Equipment Under Test (EUT) and the actual equipment being tested as the Unit Under Test (UUT).

G.5 THE DAMPED SINEWAVE INJECTION TEST

G.5.1 Applicability

The test applies to all equipment fitted with electronic and active components, particularly non-linear items such as transistors or integrated circuits, etc. Other types of equipment such as motors, generators, relays, solenoids and transformers shall be considered with regard to their function and vulnerability.

The test is applicable to all power, control and signal cable looms.

Cable looms shall be representative of the installation and each cable loom sub-group tested separately (i.e. the power loom and each signal and control loom which is routed separately from the connector).

Primary power lines shall, in addition, be tested individually, injecting and monitoring each line in turn.

If the cable loom diameter will not fit within the injection probe window, the loom shall be subdivided and the configurations defined in the TP.

Where the cable loom length between back shells is less than 0.5 m the test will not be required. For cable looms between 0.5 m and 1 m in length the injection and monitoring probes shall be positioned symmetrically about the cable loom centre. All power leads shall be tested as a 1 m loom at the EUT end only. Cable looms greater than 1m in length connecting two or more EUTs shall have transients injected at each end in turn. Where equipment has multi-installation applications, the procurement authority must define the number of configurations to be tested.

Note: Where a cable loom to be tested splits into separate branches and the split occurs at more than 0.5 m from the terminating connector, each branch must be individually tested over the entire frequency range. Where the split occurs at less than 0.5 m then the cable loom should be tested at 50 mm from the back shell of the connector carrying the majority of the cables. Where cable looms carrying conductors used in safety critical operations are to be tested then all branches must be tested irrespective of the point at which the loom splits.

G.5.2 Limits

The levels of the maximum peak induced current, the maximum probe loop voltage and the maximum volt-amp product of the current and voltage are shown in **Table 508/4–G1**. The Test Waveform shall be the DS waveform shown in **Figure 508/4–G3**. The amplitude limits for this waveform are as follows:

a. When Transient Control Levels (TCLs) are not known, the limits given in **Table 508/4–G1** and **Figure 508/4–G2** shall be used for the ETDL.

b. Where TCLs are known, the current limit shall be the relevant TCL plus the margin determined according to **Annex B**.

Frequency Range (MHz)	Maximum Peak Induced		
	Current (A)	Loop Voltage (kV)	Volt-Amp Product
2 – 30	30.0	3.00	30.0
30	30.0	3.00	30.0
35	25.5	2.55	23.2
40	21.6	2.16	17.3
45	18.1	1.81	12.1
50	15.0	1.50	7.5

Note 1: Between 30-50 MHz the amplitude reduces linearly with the logarithm of the frequency.

Note 2: For external or unprotected equipment, the values of each of the three maximum peak induced parameters shall be doubled at each test frequency.

Note 3: Where NEMP only is of concern, then the above limits may be re-defined.

Note 4: The test limit will be achieved when any one of the above three criteria is satisfied. The volt-amp product is that obtained by taking the product of the maximum voltage and current taking no account of the sign or the relative time of the two signals.

Table 508/4 – G1 Limits for Maximum Peak Induced Current, Probe Loop Voltage Volt-Amp Product

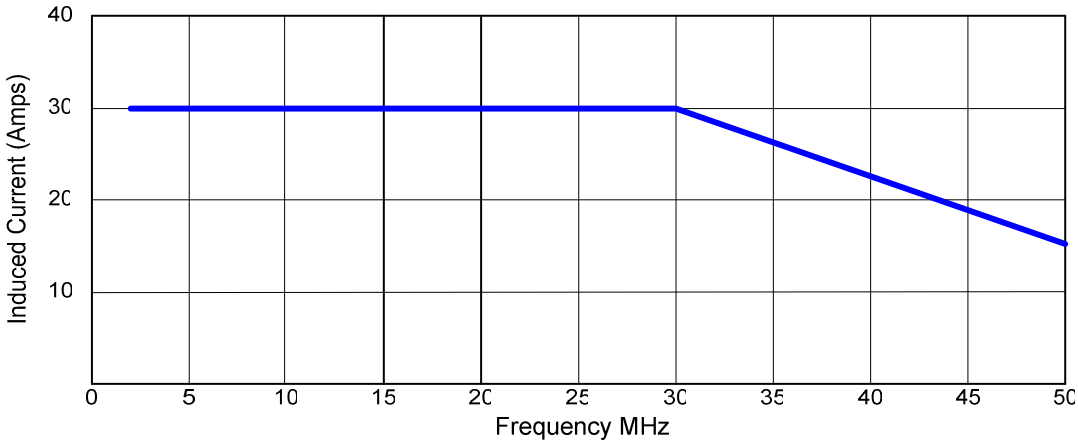

Voltage Limit: 3kV - 2 to 30 MHz reducing to 1.5 kV for 50 MHz

kVA Limit: 30kVA - 2 to 30 MHz reducing to 7.5 kVA for 50 MHz

Figure 508/4 – G2 Current, Voltage and kVA Test Limits

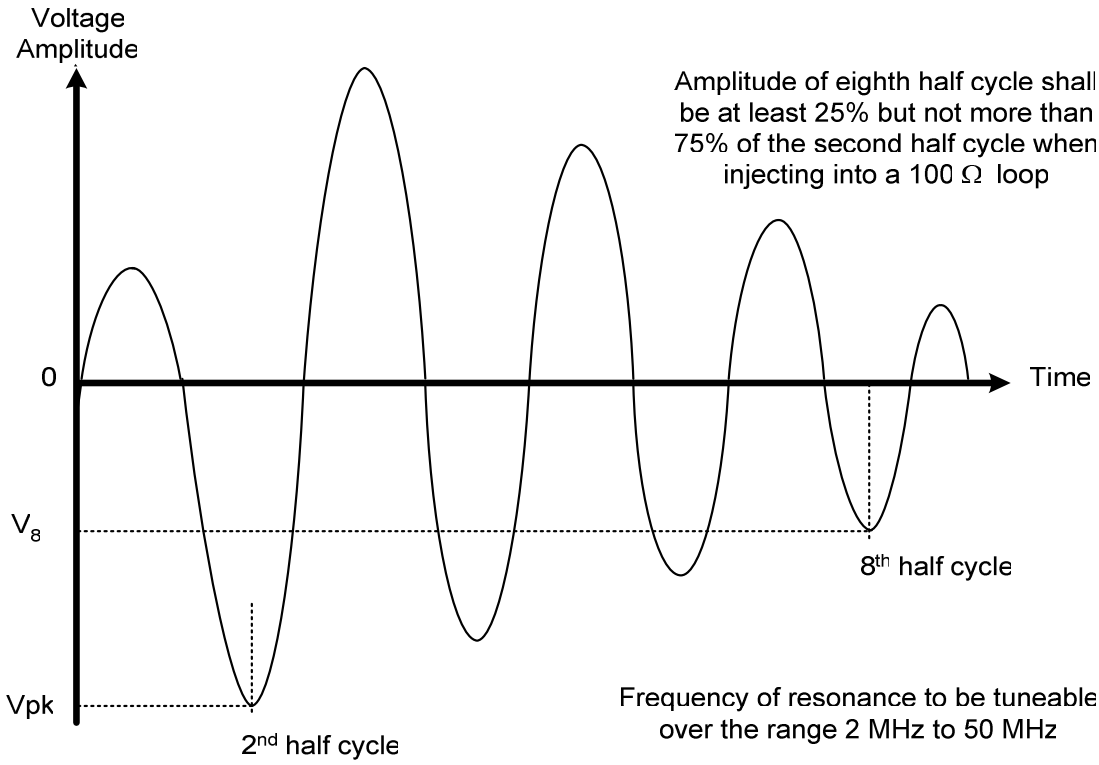

Figure 508/4 – G3 Damped Sinewave (DS) Test Waveform

G.5.3 Test Procedure

G.5.3.1 Purpose

To confirm that the EUT will withstand transients induced upon its power and signal cables without damage or malfunction as defined in the TP. Transient characteristics are based on the expected induced current levels due to the coupling of both the Nuclear Electromagnetic Pulse (NEMP) and the high frequency components of the Lightning Electromagnetic Pulse (LEMP).

This test defines the injection of damped sinewave transients on to the cable looms of the EUT with the EUT interface cabling and bonding representative of the defined installation configurations.

Where AECTP 501 test NCS01 and NCS02 are also applicable, they must be carried out prior to this test in order to find resonance/malfunction frequencies.

Note: AECTP 501Test NCE01 or NCE05 must be performed prior to performing this test. If the test(s) has been performed as part of the trial then this is acceptable.

G.5.4 Test Equipment

G.5.4.1 Variable Frequency Transient Generators

These generators together cover the required frequency range. Each generator, in association with its complementary injection probe, shall generate a damped sinusoid waveform as shown in **Figure 508/4–G3** when observed at and loaded with the 100 Ω calibration jig. The specific performance characteristics of the generator and probe, when loaded by the calibration jig unless otherwise stated, are as follows:

a. Output Frequency: The required output shall be provided at any frequency in the range 2 MHz and 50 MHz.

Note: It has been found that 2 generators are normally required to provide the output to cover the required frequency range with the break being at 30 MHz.

b. Frequency Accuracy: The measured frequency of the transient shall lie within ±10% of the indicated frequency setting of the generator. The frequency of the transient shall be determined from the average time interval between zero crossings over the first eight half cycles, during injection using the type of injection probe described in **Table 508/4–G2** with the 100 Ω calibration jig.

Frequency Range (MHz)	2 – 200
Self Inductance (µH) ± 20%	0.7
Self Resonance Frequency (MHz)± 25%	40
Resonance Impedance (Ω)± 25%	328
Insertion Loss (dB) ± 1.5dB at Frequency (MHz)	
2.0	17
5.0	10
10.0	6.0
20.0	4.5
50.0	4.5
100.0	4.5
200.0	5.0
Maximum Input Drive (kVpk)	4.0

Table 508/4 – G2 Performance Specification for Transient Injection Probe

c. Waveform Decay: The amplitude of the eighth half cycle, using the type of injection probe shown in **Figure 508/4–G3,** shall be at least 25% but less than 75% of the amplitude of the peak half cycle when measured in the 100 Ω calibration jig. The nominal Q value of this waveform lies in the range 6.8 to 32.8.

d. Output Voltage: This is defined as the peak voltage of the highest amplitude half cycle when the injection probe is open circuit (i.e. out of the calibration jig and not clamped around a cable). An output voltage of 4 kVpk is required from 2 MHz to 30 MHz, reducing linearly with frequency to 2 kVpk at 50 MHz. This output is required when measured using a single turn monitor loop as described in **Clause G.5.4.2.**

e. Output Current: An output current of up to 40 Apk for the highest amplitude half cycle is required from 2 MHz to 30 MHz, when measured in the 100 Ω calibration jig. The required level then reduces linearly with frequency to 20 Apk at 50 MHz.

f. Amplitude Control: The amplitude of the output shall be capable of adjustment so that a reduction of at least 10:1 from the defined maximum level is possible, while preserving the required waveform.

Their performance shall be verified before EUT testing, as described in **Clause 4** of AECTP501 using the 100 Ω calibration jig.

The open circuit transient voltage of the generator and the appropriate injection probe is measured by placing a small low inductance loop around the injection probe. The output of the loop is monitored using an oscilloscope. It should be noted that voltages up to 4 kV will be induced in this loop.

Current monitoring probes must be capable of accurately recording the transient without saturation either by the primary current flow in the cable loom under test or when combined with the level of the injected transient. The transfer impedance characteristic should preferably be flat over the required frequency range.

For voltage measurements, a suitable high voltage probe or a high impedance, high voltage divider will be required providing a combined measurement system bandwidth response of 100 MHz. The high voltage probe capacitance shall not exceed 20 pF and the input resistance shall not be less than 4 kΩ.

The oscilloscope shall be DC coupled with a minimum bandwidth of 100 MHz, have an external time base trigger, and provide a 50 Ω input impedance for the monitoring current probe. A means of recording the oscilloscope trace must be provided. Fast digitising oscilloscopes are recommended.

G.5.4.2 Monitor Loop

The monitor loop is required to measure the injection probe open circuit conditions. The loop must present a low inductance and hence should be manufactured from a solid copper conductor having a cross section of not less than 10 mm^2. The loop should be insulated to withstand kilovolt levels and fit closely around a cross-section of the injection probe. In some circumstances the loop can generate several kilovolts across its ends, so the loop must be insulated appropriately and the complete probe handled with care when in use. The loop shall be terminated by a screened potential divider with a nominal division ratio of 100:1. The resistance of the lower limb of the divider is 50 Ω and a resistance of this value should be installed in the probe. The output of the probe should be terminated by a 50 Ω 'through load' (or a 50 Ω attenuator) whose output can be measured remotely via a 50 Ω coaxial cable. This cable is connected and matched at the input of the waveform viewing oscilloscope to avoid standing waves on the cable. If a 50 Ω oscilloscope input port is available the cable should be connected to that port. If only a high impedance oscilloscope input is available, it should be terminated with a 50 Ω 'through load' and the cable connected to that load. A suitable probe design is shown in **Figure 508/4–G4**.

The division ratio of the potential divider must be calibrated with the waveform viewing oscilloscope connected so that an accurate calculation of the loop output voltage may be made from the oscilloscope reading. The nominal division ratio of the probe as illustrated in **Figure 508/4–G4** (measured using a high impedance probe on its output) will be about 100:1. When terminated by a 50 Ω 'through termination' and connected to a 50 Ω oscilloscope the division ratio is 300:1.

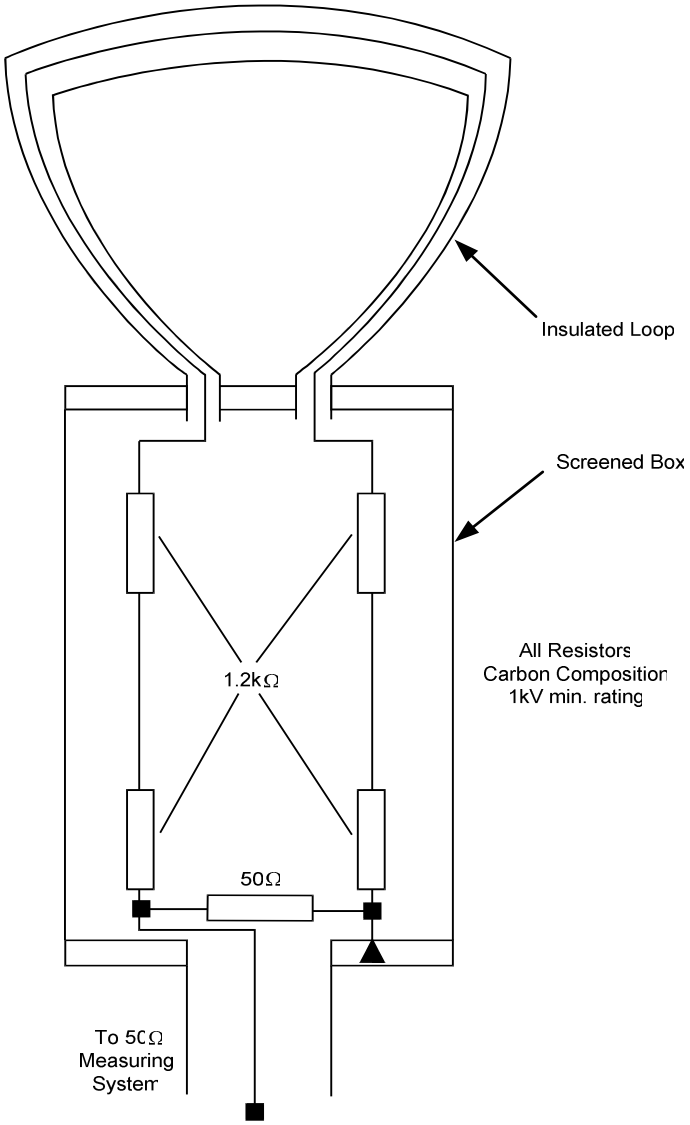

Figure 508/4 – G4 Monitor Loop Probe

G.5.5 Test Setup

Figures 508/4–G5, **508/4–G6** and **508/5–G7** show typical test arrangements. The EUT should be laid out in accordance with the general requirements of **Clause 4** of AECTP501.

Table 508/4–G3 defines the frequencies at which the damped sinewave transients are to be injected. However, additional testing will be necessary at the following frequencies:

a. Susceptible frequencies found during AECTP 501 tests NCS01 and NCS02 i.e. those frequencies where malfunctions occur below the over test limit.

b. Resonances found during the cable loom impedance measurements or during the NCS01 and NCS02 cable resonance tests.

Injection on power lines is to be made at the EUT connector end of the line. For cable looms between the EUT units or loads representative of other equipment, **Clause G.5.1** defines the requirement.

Test Number	Frequency (MHz)	Test Number	Frequency (MHz)	Test Number	Frequency (MHz)
1	2.00	18	6.10	35	18.7
2	2.14	19	6.52	36	19.9
3	2.28	20	6.96	37	21.3
4	2.44	21	7.44	38	22.7
5	2.60	22	7.94	39	24.3
6	2.78	23	8.48	40	25.9
7	2.97	24	9.06	41	27.7
8	3.17	25	9.68	42	29.6
9	3.38	26	10.3	43	31.6
10	3.61	27	11.0	44	33.7
11	3.86	28	11.8	45	36.0
12	4.12	29	12.6	46	38.4
13	4.40	30	13.4	47	41.0
14	4.70	31	14.4	48	43.8
15	5.02	32	15.3	49	46.8
16	5.36	33	16.5	50	50.0
17	5.72	34	17.5		

Table 508/4 – G3 Primary Test Injection Frequencies

c. Cable Loom Impedance

Figure 508/4–G6 shows the test arrangement and probe positions for measuring the impedance of each of the cable looms. Low level CW is injected via the injection current probe and swept between 2-50 MHz. The voltage and current are detected by the analyser and the impedance for each cable loom impedance plotted for inclusion in the Test Report. This impedance measurement is only necessary if the NCS01 and NCS02 cable resonance tests have not been carried out or the configuration or current probe positions are different.

d. Transient Injection

Transient injection shall be carried out at the frequencies identified and defined in **Clause G.5.3.1** using the test arrangement shown in **Figure 508/4–G7**, where the CW signal source has been replaced by the transient generator.

At each frequency defined by the cable loom impedance measurement, the transient generator shall be adjusted to align with the exact cable loom resonance. Since cable loom resonances may have a significant coupling effect on the generator it is recommended that the generator frequency be checked by averaging the zero crossings of the waveform.

When TCLs are not known, pulses shall be injected at the frequencies defined in **Table 508/4–G4** at progressively increasing levels, starting at 50% full threat and increasing in approximately 10% steps, until either one of the test limits, defined in **Clause G.5.2** is reached (current, voltage or kVA) or equipment degradation or malfunction occurs. If degradation or malfunction does not occur, at least 5 transients shall be injected at the maximum amplitude at each frequency. The time interval between transients shall be a minimum of 2 seconds in order to ensure the generator gives the required output for each pulse.

When TCLs are known, pulses shall be injected as required by **Table 508/4–G1** except that the current limit shall be the substantiated ETDLs of Annex B.

With digital systems, if the lightning pulse coincides with clocking pulses or other data transfer actions, data corruption could occur. It may be necessary to inject more pulses in order to achieve confidence of required error rates. This shall be identified in the TP.

If susceptibility occurs the transient level shall be reduced to obtain the threshold of malfunction.

The Test Report shall contain details of the induced transient current and probe loop voltage in addition to the frequencies selected for test. The loom current at each frequency is to be recorded graphically together with an indication of where failure has occurred.

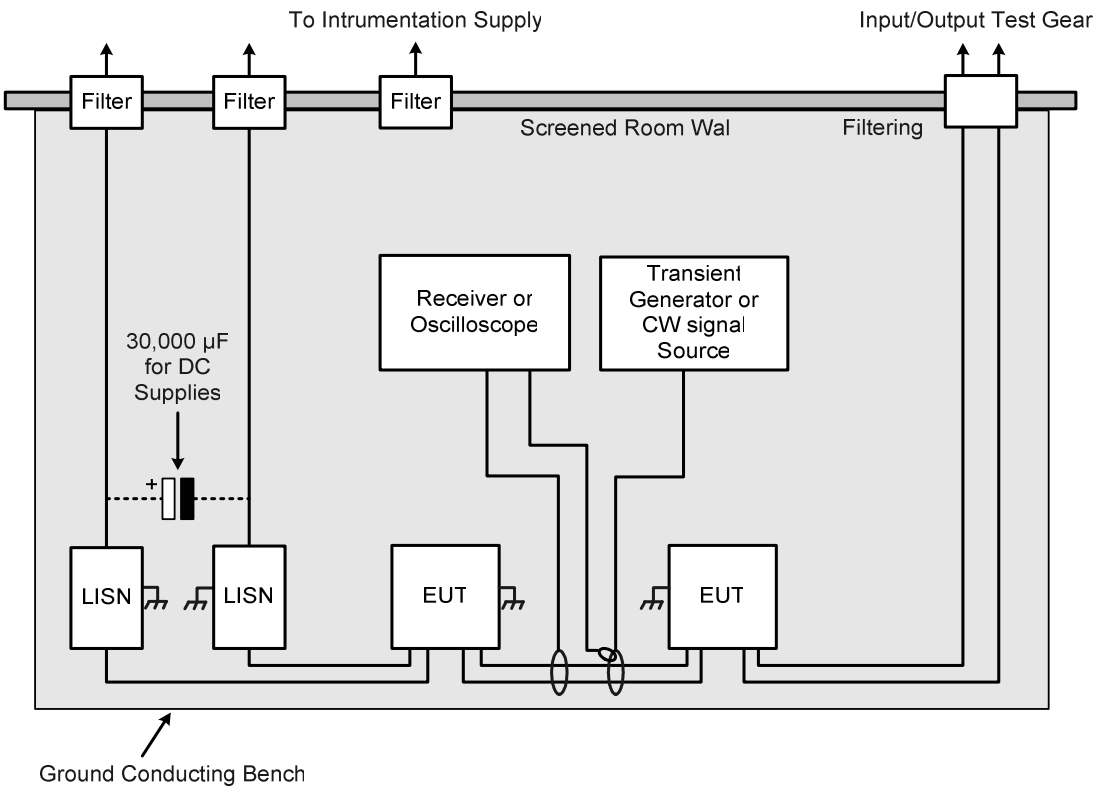

Figure 508/4 – G5 Typical Test Configuration

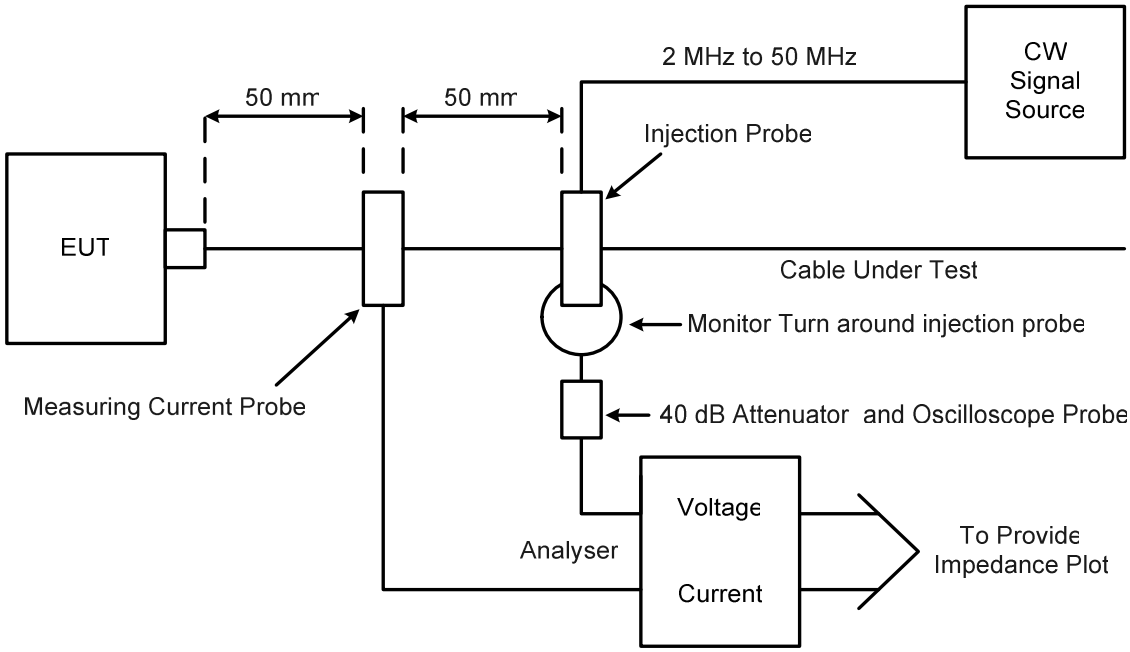

Figure 508/4 – G6 Typical Test Configuration for CW Impedance Measurement

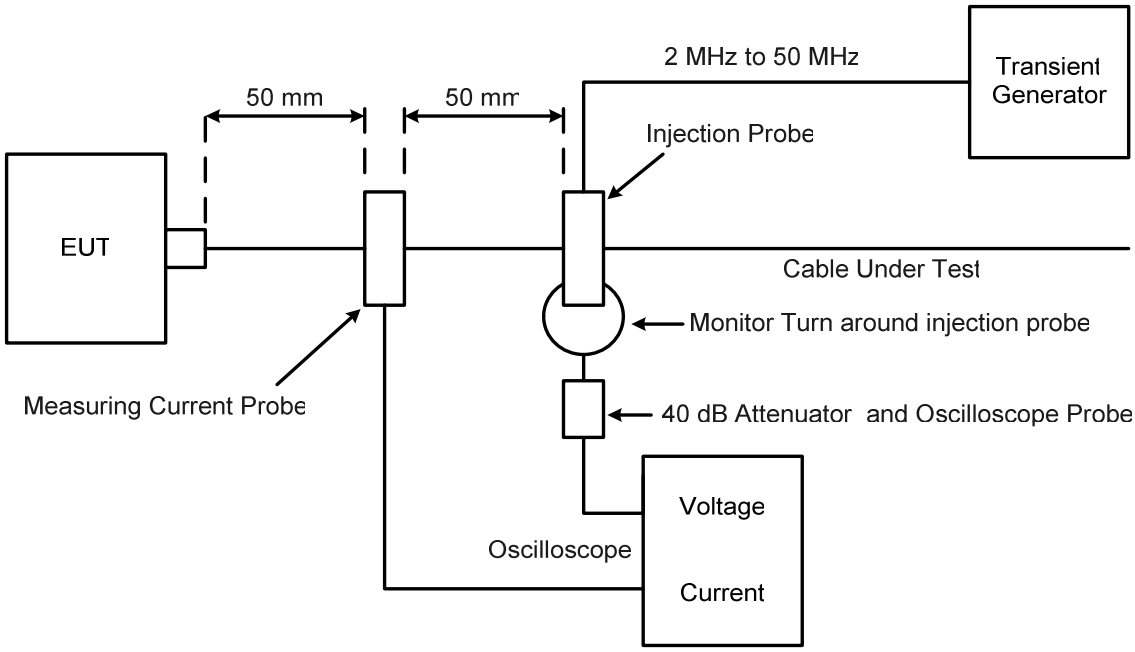

Figure 508/4 – G7 Typical Test Configuration for Transient Injection

G.6 THE GROUND VOLTAGE INJECTION TEST

See AECTP 501 NCS10 Test Method for the general test requirements.

G.6.1 Test Categories and Levels

a. Where TCLs are not known and modelling has not been done the test levels defined in AECTP 501 [Ref 5] **Table NCS10-1** of shall be used.

   Where equipment and cables can be defined in more than one of the categories noted, the test levels associated with the more severe environment shall be applied.

b. Where TCLs are not known and modelling has been done, the waveform shall be selected according to the equipment categories given in [Ref 5] and the current limit shall be the relevant CTL plus the margin determined according to **Clause 4**.

c. Where TCLs are known the waveform shall be selected according to the equipment categories given in [Ref 5] and the current limit shall be the relevant TCL plus the margin determined according to **Clause 4.4**.

G.6.2 Injection Test

a. When the TCLs are not known, with the waveform selected as appropriate to the equipment test category given in [Ref 5] **Table NCS10-1** inject three transients at each level. Pulses shall be injected at progressively increasing levels, starting at 50% full threat and increasing in approximately 10% steps, until either one of the test limits, defined in [Ref 5] **Table NCS10-1** is reached (current or voltage) or equipment degradation or malfunction occurs.

b. When TCLs are known, pulses shall be injected as required by (a.) except that the limits shall be the substantiated ETDLs of **Clause 4.**

   When testing equipment using the Long Pulse if the voltage limit is reached before the current limit, testing shall be stopped and recommenced using the Intermediate waveform at CAT D levels.

c. At the test limit, if equipment degradation or malfunction has not occurred, 10 pulses separated by at least 8 seconds over a period of not more than 2 minutes shall be injected.

   A typical set of current and voltage waveforms shall be recorded and included in the Test Report.

d. If susceptibility occurs, the transient level shall be reduced to obtain the threshold of malfunction. The current and voltage levels at the threshold of malfunction shall be recorded.

G.6.3 Multiple Burst Tests

The Damped Sinewave Test defined in **Clause G.5** shall be repeated but using the waveform and amplitude limits defined in Ref [1]. It should be ascertained that equipment is not at risk when subjected to the Multiple Burst Environment given in Ref [1].

ANNEX H

GROUND ENVIRONMENT AND TEST METHODS FOR NEARBY FLASHES

H.1 INTRODUCTION

This Annex explains the derivation of the nearby flash and gives background and guidance for the nearby flash evaluation requirements.

H.2 THE NEARBY FLASH ENVIRONMENT

H 2.1 Need for the Environment

Weapons may experience a hazard from either a direct attachment or a nearby flash. However, direct attachment is the more severe hazard and the effects of a nearby flash do not therefore require separate assessment. However, there is an exception in relation to those ground based weapons that are required to survive a nearby strike to the ground but not a direct attachment. For the lightning assessment of these weapons it is necessary to define the electromagnetic environment near the ground in terms of the magnetic and electric fields and their rates of change at a particular distance from the flash.

This distance will be the minimum distance (R) that the weapon can be from the flash without an attachment being formed and will depend on the height and shape of the weapon and the topography of the surroundings. Since the topography for a wide variety of situations cannot be defined in advance, standardised conditions are achieved by assuming the surrounding ground to be flat, with no significant protrusions. The minimum distance R can then be predicted by a strike point location method such as the "rolling sphere" used in calculating the lightning protection of buildings Ref [4]. Practice has shown that a sphere of radius 50m is generally representative of a worst case ground strike scenario and this should therefore be used to determine the minimum strike distance. **Figure 508/4–H1** shows the basis for the rolling sphere calculation and the resulting values for a 50m radius sphere are given in **Table 508/4–H1**.

It should be clearly understood that, although the ‘flat plane’ environment is likely to be a worse case environment, there is no guarantee that weapons so evaluated will not be at risk in use. This is because the proximity to each other, packaging, stacking, local buildings etc. will greatly influence the outcome. Precision in these calculations is not therefore important except perhaps for a fixed installation.

It is considered that the method should not be used for weapon heights below 1 m because then the inevitable roughness of the ground negates the assumption that the ground is flat compared with the height of the weapon. In any case, the expressions for calculating the magnetic and electric fields at the weapon as tabulated in **Table 254-5** of Ref [1] are not valid for R less than 10m, which corresponds to a weapon height of 1 m. For weapon heights of 1 m and less, R should therefore be taken to be 10 m. That value may also be employed generally as a "default" value in preliminary assessments.

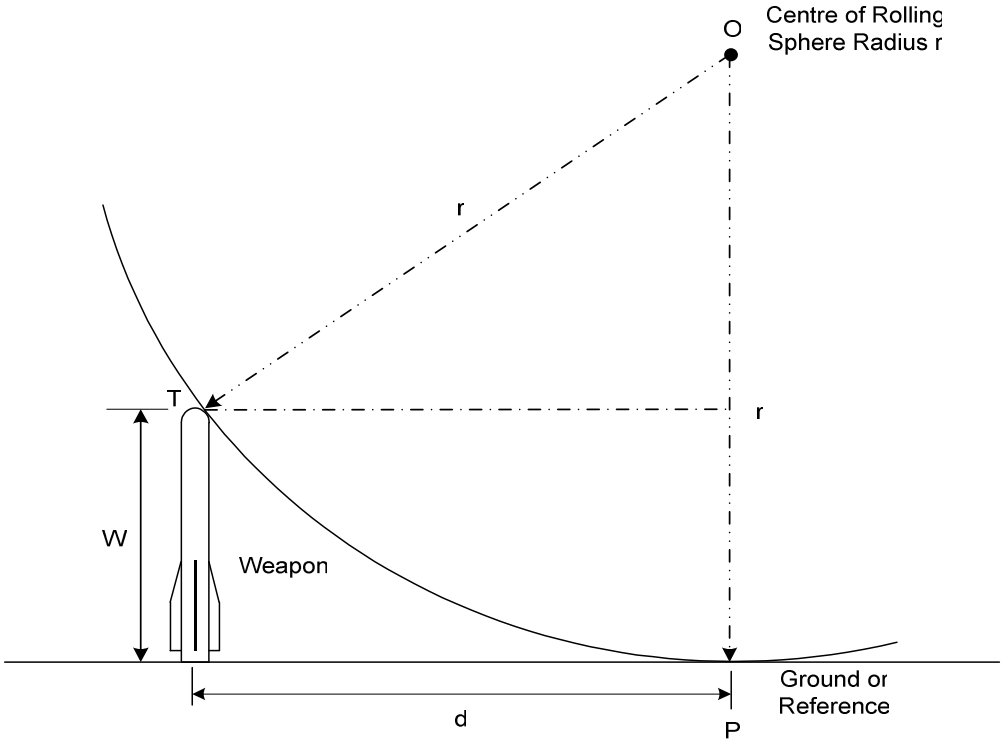

Figure 508/4 – H1
Rolling Sphere to Determine Minimum Distance between Flash and Weapon without Attachment

Weapon Height (w) m	1	2	3	4	5	10
Minimum Distance (d) m	9.9	14.0	17.0	19.6	21.8	30.0
Rounded value of d m	10	14	17	20	22	30

Table 508/4 – H1 Value of Minimum Distance (d) for Various Weapon Heights

H.3. CALCULATION OF MAGNETIC AND ELECTRIC FIELDS

H.3.1 Magnetic Field

A recommended method for estimating the magnetic and electrical fields at the minimum distance R (metres) from the flash is described here and the results have been incorporated in the environment specified in Ref [1]. It is considered that the magnetic field is due to the lightning return stroke current flowing in a vertical lightning channel so that the magnetic field is substantially horizontal. According to Ampere's Law:

$$\text{Magnetic Field}\,H = \frac{\text{Current}}{2\pi \times \text{Distance}} \quad \left[\frac{A}{m}\right]$$

By differentiation, the rate of change of magnetic field is obtained.

H.3.2 Electrical Field

The maximum electric field on the ground is substantially vertical and occurs just before the return current pulse, at the moment when the descending lightning leader meets an answering streamer from the ground thus completing the path along which the return current will flow. It is assumed that the conjunction takes place at a typical height of 50 m, and it is also assumed that the leader carries a charge of 10^{-3} coulomb/m and advances at a velocity of 10^{8} m/s. It is estimated that in the absence of streamers, a leader at a height of 50 m would produce a field of 0.36 x 10^{8} V/m on perfectly flat ground immediately below it.

However, this value is not to be employed in the definition of the environment because it is considered that as part of the process of initiating streamers. The local field will be enhanced by minor projections on the ground, (as the ground is unlikely to be perfectly flat) until it reaches a value of 3.0 x10^{6} V/m, which is the breakdown field for air at ground level. The corresponding value for the rate of change of field has been calculated by assuming that this field collapses in the time taken for the answering streamer to reach the leader and effect a junction, which is 0.5 ms for a height of 50 m. This gives a rate of change immediately below the leader of 6 x 10^{12} V/m/s. Both the electric field and its rate of change reduce with horizontal distance (R) from the strike point in accordance with **Table 254-5** of Ref [1].

With the assumption of a junction height of 50 m and a maximum rate of change of lightning current of 10^{11} A/s, the environment at a horizontal distance R from the lightning channel where R is not less than 10 m which is shown in **Table 254-5** of Ref [1].

H.4 ASSESSMENT OF NEARBY EFFECTS

H.4.1 Required Assessments

When an assessment of the effects of a nearby flash on a weapon is required the appropriate requirements must be followed which shall include a lightning transient assessment and an Explosion Hazards Assessment. When the latter is done it may proceed as for a direct attachment, except that the external environment is defined in terms of impinging fields instead of a current flow through the weapon. The usual methods of calculating field penetration may be employed to establish the internal environment and hence to estimate induced transients. If the LHDA indicates that the induced effects are estimated to be well below the allowable level, then it generally would not be necessary to proceed to any further analysis or tests for nearby lightning. If, on the other hand, such preliminary evaluation predicted an excessive level of transient, or was inconclusive, then further evaluation would be needed.

H.4.2 Need for Testing

As with assessments for direct attachments the need for testing and the details of those tests must be ascertained for both the transient and explosive hazards assessments. When tests are necessary they must be made separately for both H and E field excitation.

H.5 MAGNETIC FIELD TESTS

In this test the weapon is subjected to a magnetic field having the desired shape. In principle the exciting current could be flowing in a vertical rod representing the lightning channel situated at the appropriate distance. This is not feasible because of the difficulty in simulating the true current flow. (In a lightning strike to ground the current spreads out radially into the ground but in a test it would have to return to the pulse generator and this would alter the distribution of the magnetic field around the weapon being tested). Figure shown in **Table 508/4–H1** is therefore used, whereby the weapon is mounted on a non conducting platform and placed at the mid-way point M between the two circular coaxial conducting loops of a Helmholtz coil diameter D (metres) where the axial distance between the loops is equal to D/2. With these proportions the magnetic field due to current in the loops (in the absence of the weapon) does not vary much with position along the axis on either side of M. The loops are connected in series so that they carry the same current (i) and the loop diameter should be chosen to give adequate clearance of the weapon from the loops. The magnetic field at M is along the axis of the loops and has magnitude:

$$H = 1.43\ i / D \qquad A/m$$

Compared with that for the field that would be produced by a current flowing in a vertical channel situated at a horizontal distance R it is seen that to produce the same field the loop current needs to be given the value equal to the lightning channel current multiplied by a scaling factor 0.11 x D/R.

The loops are energised by an appropriate transient generator. The return conductors to the generator should be carefully designed to minimise their inductance and to avoid stray fields, which might distort the magnetic field applied to the weapon positioned within the Helmholtz Coils.

H.6 ELECTRIC FIELD TESTS

Internal transients due to external electric fields are not likely to be as significant as those due to external magnetic fields. This is because of the high degree of shielding provided by a metallic skin. Even materials such as CFC which have low magnetic shielding provide a reasonable electric field shielding, and the only significant penetration of electric field is at any apertures, or where the skin is of a non conducting material such as glass fibre composite. It is quite possible therefore that the LHDA may show that only magnetic field tests are needed, but this needs to be proven.

High levels of electric field may give rise to corona discharges at sharp edges; extremities or protrusions and these produce radio frequency (RF) emissions. This effect depends on the field strength but most other effects depend on the rate of change of field. Ref [1] states that the environment at the ground strike point just before the strike is assumed to be comprised of a vertical electric field of 3×10^6 V/m with a rate of change of electric field of 6×10^{12} V/m/s.

From **Table 254-5** of Ref [1] the value of E when R is between 10 and 20 metres falls between 2.94 and 2.79×10^6 V/m, which for all practical purposes is 3×10^6 V/m. To establish such a field without flash over to the test object would be difficult if not impossible, apart from there being the need for a very high voltage generator. Consequently E field tests are not practical. As noted above they are not really necessary anyway as the only effect produced is Corona emissions which is of secondary importance. Consequently only a dE/dt excitation is specified here.

Figure 508/4–H3 illustrates an arrangement that can give approximately 6×10^{12} V/m/s at the test object 4 metres away from the HV electrode. The actual dE/dt that will occur will depend on the geometry of the test object and the voltage at which the calibration spheres are set to flashover together with the peak voltage attainable from the generator. A 2 MV generator will usually achieve a peak of 2.5 MV but if that is not so, the gap must be set to a lower value, the gap will flashover in approximately 0.1 µs.

H.7 TEST REQUIREMENTS FOR NEARBY FLASH EVALUATION

H.7.1 Introduction

This Clause defines the requirements, which shall be met when tests for the Indirect Effects of nearby lightning on weapons on the ground are required by the LHDA.

H.7.2 Tests Magnetic & Electric Fields

Separate tests for magnetic field and electric field excitation shall be made as described in **Clauses H.7.3** and **H.7.4**. The tests, unless otherwise agreed with the National Authority, shall be either Part System or Whole System Tests, as outlined in **Clauses H.7.3.1** and **H.7.4.1**. If the National Authority requires more detailed investigation of transient levels within the Munition then the tests of **Clauses H.7.3.3** and **H 7.4.3** shall be made.

H.7.2.2 Environment to be Simulated

The environments for the tests shall be the horizontal magnetic field H and the dE/dt associated with a vertical electrostatic field E, which would occur at the weapon due to a strike, to a flat ground plane, R metres away. R is the minimum distance a flash can be away from the weapon before it forms a direct attachment to the weapon. Values of H and E in terms of R are given in [Ref 1]. R shall be determined according to the method given in **Clause H.7.5** which also defines the waveforms to be used for the tests. It should be noted that for small weapons such as grenades, mines, etc, R should be taken as 10 m.

H.7.3 Magnetic Field Tests

H.7.3.1 Test Arrangement

The weapon shall be mounted on a non conducting platform and placed at the mid point M between two circular coaxial conducting loops of diameter D (metres) where the distance between the loops is equal to D/2, as illustrated in **Figure 508/4 – H2**. The loop diameter shall be chosen to give adequate clearance between the weapon and the loops. The loops shall be connected in series and energised by the test current waveform defined in **Clause H.7.5**. To avoid generator design problems the coil diameter should be limited to 4 metres.

H.7.3.2 Whole System and Part System Tests

As appropriate Part Live Whole System or Part System Tests shall be made as required by **Table 254-5** of Ref [1], except that the test current waveform shall be as noted in **Clause H 7.5.1** and the test arrangement shall be as noted in **Clause H.7.3.1**.

H.7.3.3 Transient Assessment Tests

When transient assessment tests are necessary they shall be made as required by **Table 254-5** of Ref [1] except that the excitation threat levels shall be as noted in **Clause H.7.5.1** and the test arrangement shall be as defined in **Annex A.1**.

H.7.4 Electric Field Tests

H.7.4.1 Test Arrangement

The weapon shall be arranged as illustrated in **Figure 508/4–H3**. The test waveform defined in Clause H.7.5.2 shall be applied to the test electrode.

H.7.4.2 Whole System and Part System Tests

As appropriate Part Live Whole System or Part System Tests shall be made according to **Annex F**, except that the test current waveform shall be as noted in **Clause H.7.5.2** and the test arrangement shall be as noted in **Clause H.7.4.1**.

H.7.4.3 Transient Assessment Tests

When transient assessment tests are necessary they shall be made as required by **Table 254-5** of Ref [1] except that the excitation threat levels shall be as noted in **Clause H.7.5.2** and the test arrangement shall be as in **Clause H.7.4.1**.

Internal transients due to external electric fields are not likely to be as significant as those due to external magnetic fields as explained in this leaflet.

H.7.5 Determination of Test Waveforms

H.7.5.1 H Field Simulation

The parameters of the H field to be simulated are those due to a strike to ground, with the full threat parameters as given in **Table 254-5** of Ref [1] occurring at distance R metres from the weapon. The parameters of H at the weapon are given in terms of R by the expressions tabulated in Ref [1].

R shall be determined by the 'rolling sphere' method as described in this leaflet whereby an imaginary 50 m radius sphere is rolled along a flat plane until it touches the weapon. The distance (d) from the side of the weapon to a projection from the centre of the sphere to the plane is distance R. This procedure shall be repeated for all possible orientations and arrangements (vertical/flat) of the weapon. The lowest value of d so obtained shall be taken as R, unless R is less than 10 m in which case the value used is 10m.

When R is reduced to 10 m, this is considered to be the minimum size to assess all the possible attachment points for ground or air launch. For weapon aircraft carriage assessment, the same process is performed with the weapon attached to each of the possible stores pylons or weapon stations, then rolled along each surface of the aircraft taking into account the weapon fitted to the aircraft to assess all possible attachments.

However, if the weapon is symmetrical then d is calculated from:

$$d = [w(100 - w)]^{1/2}$$

Where w is the distance to the top of the weapon from the ground or reference plain when assessing free flight condition in the orientation to be considered.

The correct values of the H parameters are obtained if Waveform A_{2s} is scaled by 0.11 D/R.

H.7.5.2 E Field Simulation

It is noted that it is only practical to simulate dE/dt and not possible to simulate the E Field. **Table 254-6** of Ref [1] gives the value of dE/dt in terms of R as:

$$\frac{6x10^{12}}{\left[1+\left(\frac{R}{50}\right)^2\right]^{1/2}}$$

For practical purposes dE/dt may be taken as 6 x 10^{12} V/m/s since for values of R between 10 m and 20 m, dE/dt falls between 5.88 and 5.58 x 10^{12} V/m/s. To obtain this value a test arrangement similar to that illustrated in **Figure 508/4 – H3** might be used, as discussed in this leaflet.

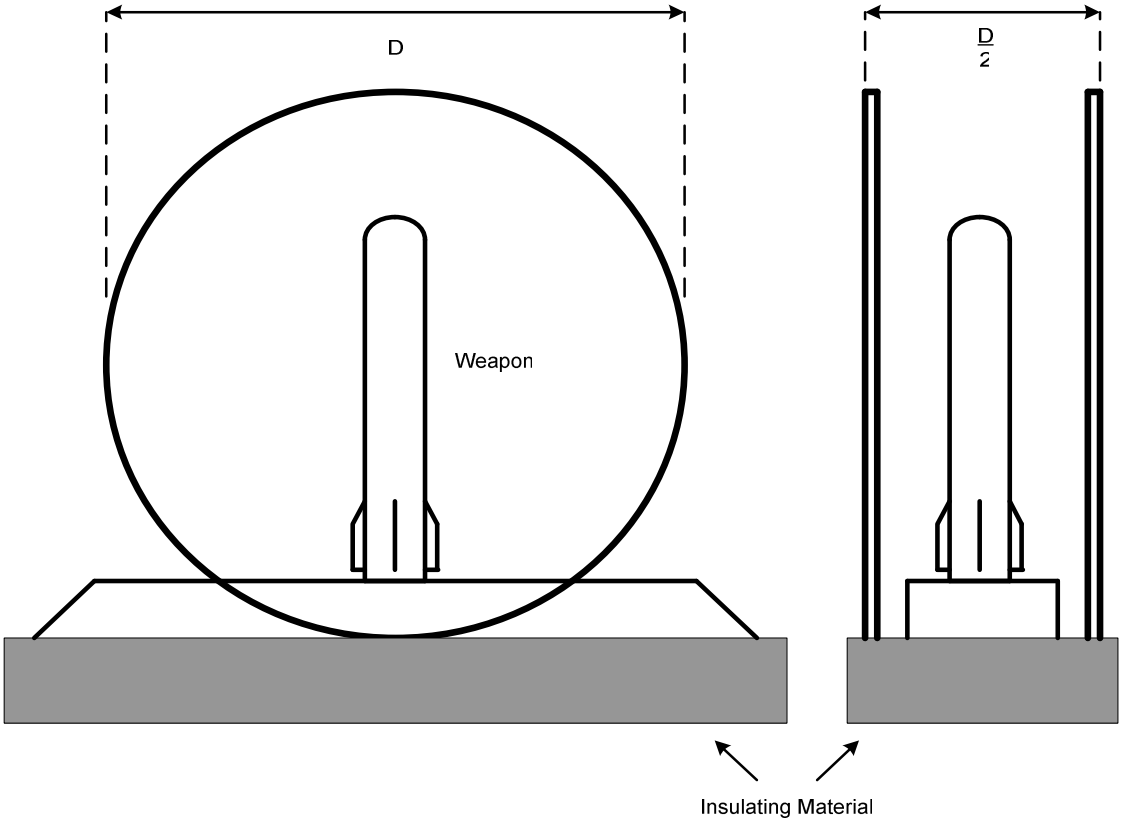

Figure 508/4 – H2 Test Arrangement for Magnetic Field Test

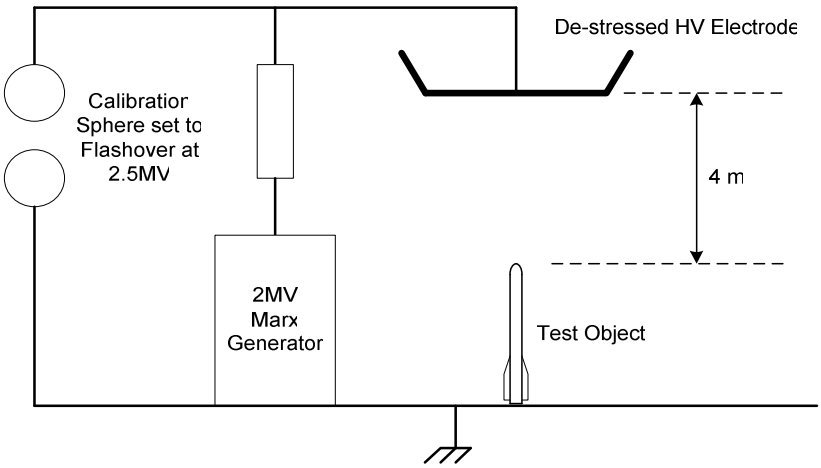

Figure 508/4 – H3 Test Arrangement for Electric Field Tests

CATEGORY 508: LEAFLET 5

NUCLEAR ELECTROMAGNETIC PULSE TEST PROCEDURE FOR MUNITIONS CONTAINING ELECTRICALLY-INITIATED DEVICES

1 AIM 508/5-3

2 APPLICABILITY 508/5-3

3 NEMP SIMULATORS 508/5-3

4 ASSESSMENT 508/5-3

5 ANALYSIS 508/5-3

5.1 Configuration Analysis 508/5-4
5.2 Stress Levels Analysis 508/5-4

6 GENERAL TEST REQUIREMENTS 508/5-4

6.1 Test Configuration 508/5-4
6.2 Condition of Test Item 508/5-4

7 TEST PLAN 508/5-5

8 TEST EQUIPMENT 508/5-5

8.1 Simulators 508/5-5
8.2 Measuring Systems 508/5-6
8.3 Use of Live EIDS 508/5-6

9 PROCEDURE 508/5-6

9.1 General 508/5-6
9.2 Test Arrangements 508/5-8
9.3 Specific Test Procedures 508/5-8

10 NUMBER OF TESTS 508/5-11

11 ACCEPTANCE CRITERIA 508/5-12

11.1 Failure Criteria 508/5-12
11.2 Safety Margins 508/5-13

12 REPORTING REQUIREMENTS 508/5-13

12.1 Test Report 508/5-13
12.2 Assessment Report 508/5-13

13 APPLIABLE DOCUMENTS 508/5-13

13.1 Referenced 508/5-13
13.2 Information Only 508/5-13

14 ACRONYMS 508/5-14

FIGURES

Figure 508/5 – 1 NEMP Testing Flow Diagram 508/5-7

TABLES

Table 508/5 – 1 Number of Pulses to Apply for NEMP Test 508/5-12

CATEGORY 508: LEAFLET 5

Nuclear Electromagnetic Pulse Test Procedure for Munitions Containing Electrically-Initiated Devices

1 AIM

The aim of this leaflet is to define the normal test procedures to be used in determining the safety and suitability for service of munitions containing Electrically-Initiated Devices (EIDs) and associated electrical/electronic sub-systems, in the Nuclear Electromagnetic Pulse (NEMP) environmental conditions specified in AECTP-256 Ref [1] for NATO forces.

2 APPLICABILITY

Both high altitude (exo-atmospheric) and low altitude (endo-atmospheric) Electromagnetic Pulses (EMPs) are potential threats to munitions or weapon systems which contain EIDs and electrical/electronic components within the sub-systems associated with the operation of such devices. Degradation, damage or unintended functioning of such devices and components could result in an event which has either safety or operational consequences.

This leaflet addresses NEMP tests which are used to determine whether the EIDs and/or electronic systems contained within a munition or associated system will remain safe and suitable for service after being exposed to the Nuclear Electromagnetic Pulse environments defined in Ref [1].

3 NEMP SIMULATORS

Simulators have been developed to generate a NEMP test environment. Each NEMP simulator has particular strengths and weaknesses depending on the test conditions and the weapon system to be tested. Some knowledge about the system to be tested and effects to be examined is necessary for selecting an NEMP simulator. The simulator compromises are almost certainly greatest for endo-atmospheric EMP. The appropriate simulator to be used for the test of munitions and weapon systems can be found with the support of guidance given in AEP-9 Volume 5 Ref [2]. Testing alone will be unlikely to determine the safety and suitability for service of munitions.

4 ASSESSMENT

A safety and suitability for service assessment of the NEMP susceptibility of the munition and/or associated systems shall be conducted to determine whether testing is required. Limited guidance on conducting such an assessment is given in AEP 18 Ref [3]. Where the analysis shows conclusively that the munition and its associated systems are not susceptible to the NEMP threat, the requirement for testing may be waived upon the approval of the appropriate National Safety Authority.

5 ANALYSIS

Where the assessment demonstrates the potential for NEMP susceptibility, a coupling analysis shall be conducted for all relevant configurations and states of the weapon within its service life cycle. It shall determine the most significant orientations and layouts of the weapon both in the real case and within the simulated field. In addition the coupling analysis shall consider Pin to Pin (PTP) and Pin To Case (PTC) firing modes including consideration of the electrical assembly or situation of the EID inside the weapon (EID with/without metallic case, grounded/not grounded metallic case).

5.1 Configuration Analysis

In general, the most susceptible configuration to a NEMP occurs during preparations for a launch. At this time, external cables enter the munition creating antennas more capable of interacting with the pulsed electromagnetic field. Another susceptible configuration is the in flight missile where all electronic sub-systems are active and the electro-explosive devices are connected to the firing circuits. In addition, the possibility for maximising the NEMP coupling to the missile is enhanced due to the effective length of the missile being increased by the electrically conductive exhaust plume from its motor.

The analysis shall recognise the degree of hardness required by the munition at each stage of the life cycle (e.g. for some systems the user requirement may only be that they remain safe and loss of some or all performance may be acceptable) for others they maybe required to remain safe at all times but damage may be acceptable for the short time during which they are powered.

5.2 Stress Levels Analysis

The analysis shall attempt to relate the simulated stress levels on devices and components to those that could be experienced in an actual exposure. Levels of stress that can cause upset, damage or unintended events of a hazardous nature shall be indicated, particularly those applying to EID, given in terms of a no-fire threshold or switching level for electronic devices. Any relevant testing during the qualification of sub-systems, equipments and components would need to be considered. The analysis may include consideration of measurements to relate external fields and/or skin currents to cable currents; such measurements could be made at full threat or sub threat and use either pulse or CW signals.

6 GENERAL TEST REQUIREMENTS

6.1 Test Configuration

Where testing is required, it should be performed in all the system configurations and field polarisations recognized as representative for the worst case situations likely to be encountered during the service life of the munition or weapon system.

An analysis of the life cycle of the munition or weapon system shall be undertaken to determine the possible exposure configurations of the test item; it may be necessary to test more than one configuration. Any protective caps or covers over connectors and/or shorting/grounding devices should be used during testing if they would be in place during the part of the logistics cycle simulated by the particular test.

6.2 Condition of Test Item

As discussed in **Clause 9.3.1** the item selected for testing shall be fully assembled either with live EIDs or instrumented EIDs. Where there are associated electrical/electronic sub-systems fitted, these shall be fully functional. All other explosive material is to be removed. If it is considered that the presence of this material would affect the degree of coupling to the components being assessed, then it should be replaced by ERM. The degree of similarity between the actual material and the Electrically Representative Material (ERM) shall be agreed between the assessor and the equipment sponsor/project management. The test item can be exposed to simulated fields both in a powered and un-powered condition. Where power supplies are not integral with the system, precautions shall be taken to protect them against the NEMP effects.

The item under test shall be representative of the final production configuration, assembly practices, and cable and connector design and installation.

7 TEST PLAN

A Test Plan shall be prepared for each munition or weapon system and/or associated systems on which tests are conducted. This Test Plan shall include, but not be limited to, the following:

a. Description of the munition or weapon system and associated systems and the test configuration of the munition and surrounding systems, e.g., package mode, armed/unarmed, loaded/unloaded, and its position with regard to the Electric (E) and Magnetic (H) fields associated with the NEMP.

b. Description of the test facilities to be employed to include instrumentation and simulator characteristics, environment measurement techniques, and calibration procedures.

c. The safety controls to be taken to protect personnel and equipment in the event the EIDs function during the test.

7.1 The Test Plan shall require the following pre-test data and information:

a. The sequence of system configurations and functional modes to be investigated.

b. The test levels and waveforms to be generated by the simulator associated with each of the above configurations/modes of operation.

c. The need for instrumenting sensitive devices and components and the selection and type of instrumentation to be used, particularly if energy sensitive devices, which may respond to single pulse inputs, are used in the munition.

d. The need for other monitoring equipment, e.g., current probes, and their position in each layout.

e. The number of times each munition and its associated sub-systems are to be tested in each configuration/mode and whether items like EIDs are to be replaced between successive electromagnetic pulses.

f. The required EID Safety Margins.

g. The susceptibility failure criteria, levels, tolerances for all relevant electronic sub-systems; or Time-to-Repair (if EMP destructive failures are acceptable).

7.2 It shall also require the following data/information to be recorded during or following the test:

a. The measured levels, waveforms and frequency spectra of simulated NEMP for each test.

b. The measured response of EIDs or sensitive components/electronic sub-systems.

c. Any other pertinent information such as current induced, ambient conditions etc.

d. Any testing of sensitive components or electronic circuits made after exposure to the simulated NEMP to determine cause of parameter change or damage mechanism.

8 TEST EQUIPMENT

8.1 Simulators

The dimensions of the system to be tested largely govern the choice of simulator. Some can accommodate a large aeroplane and others are only large enough to accommodate minor equipment.

8.1.1 Field Intensity Uniformity

It is necessary to ensure that the field does not vary significantly (more than 6 dB) in level over the volume of space which the particular configurations of the system will occupy.

8.1.2 Simulator Loading

All material placed in the radiated field "loads" the environment. In some simulators it is necessary to ensure that the field reforms after transiting, say a large container or tank, before the line termination is reached. It is necessary in a bounded wave simulator to ensure that the system will not short out the field to such an extent that breakdown occurs between the upper surface of the line and the equipment.

8.2 Measuring Systems

8.2.1 If the munition or the weapon system has to be instrumented to measure induced currents and/or voltages at critical circuit locations (as determined by analysis described in Clause 5), the following measuring systems have to be used:

a. A measuring system for electronics associated with EIDs from AECTP 501 Ref [4].

b. A measuring system for EIDs that monitors PTP and where necessary PTC induced current or energy. The data transmission system used between instrumented devices and their recording equipment shall not distort the applied field to an unacceptable level, induce spurious signals in the EIDs or alter the data. This is commonly accomplished by using fibre optic assemblies and cables or microwave telemetry to transmit data between the EID under test and the remotely positioned recording instrumentation.

8.2.2 Alternatively, data can be brought out via well shielded coaxial lines through connectors in the weapon skin. The lines should be routed perpendicular to the E field and surrounded by RF absorber material to minimize electromagnetic coupling. Tests will be then performed to ensure there are no instrumentation induced errors.

8.3 Use of Live EIDS

When live EIDS are to be used (see specific procedures at **Clause 9.3.1**), measurement of their resistance before and after test can be made using a safety ohmmeter. The measurement can provide an early indication that significant change has occurred but other tests of a non destructive nature should be employed to examine their condition after test, particularly if EID dudding is suspected.

9 PROCEDURE

9.1 General

This clause provides a general outline of the procedures to be used in the NEMP testing of munitions and weapon systems. A detailed procedure shall be developed for use by personnel conducting the testing (see **Figure 508/5–1**).

The munition or weapon system, in its most vulnerable configurations, shall be exposed to the simulated NEMP. For all test configurations, the munition shall be oriented with reference to the incident E and H field to ensure maximum coupling of energy to all components of concern. If maximum coupling to different components requires different orientations, or if worst case coupling cannot be determined a priori, various orientations shall be used to ensure testing in the worst case conditions.

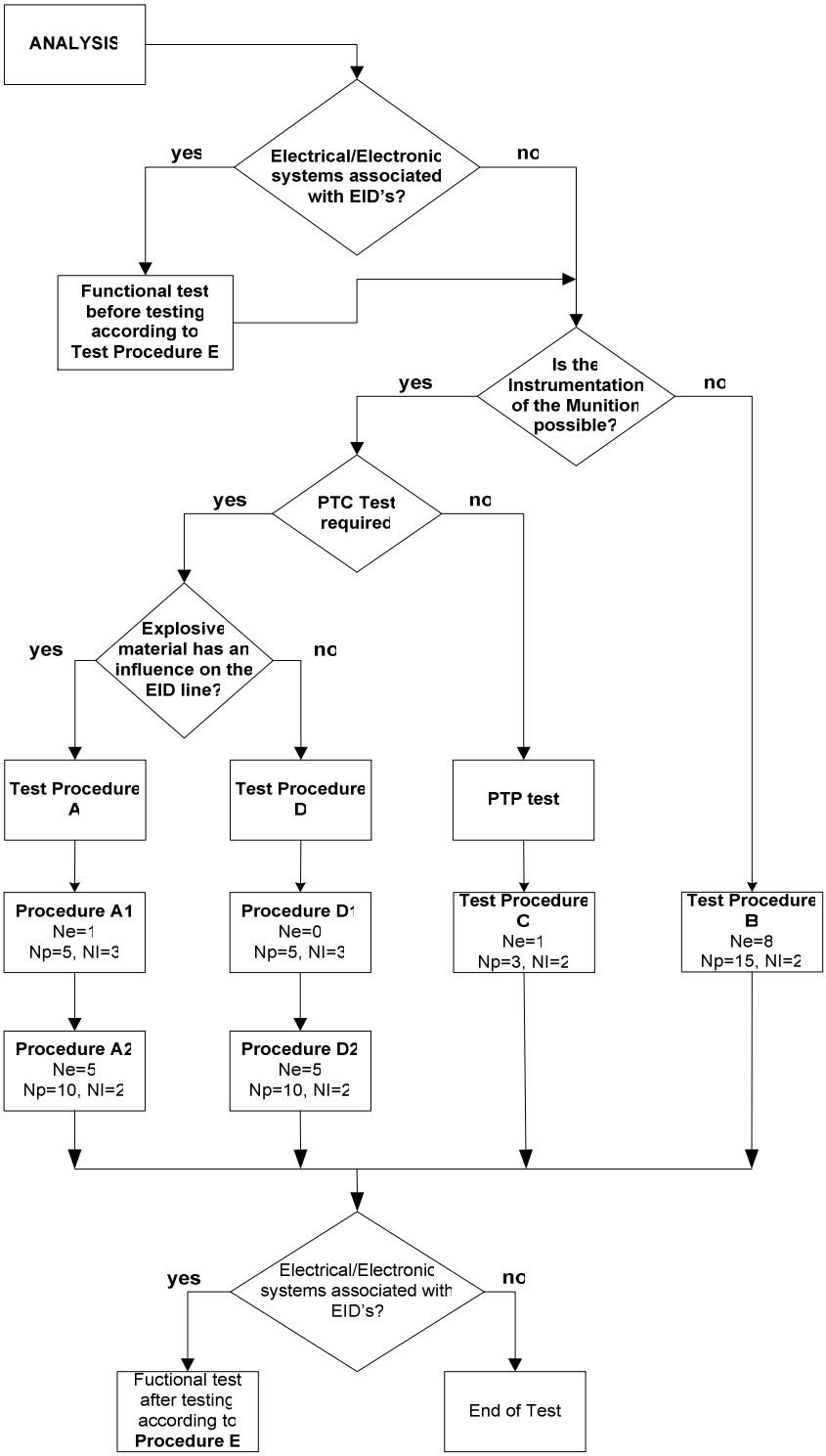

Figure 508/5 – 1 NEMP Testing Flow Diagram

9.2 Test Arrangements

The arrangements which give maximum coupling will be used if known; otherwise the following arrangements will be used:

a. Monopole: The munition under test shall be supported by a dielectric structure. The major axis of this arrangement shall be oriented parallel to the incident E field generated by the simulator. The extremity of the munition closest to the ground is connected to ground. The arrangement then resembles a monopole antenna in maximum coupling mode. The grounding method used shall not increase the coupling to the munition.

b. Dipole: The munition under test shall be supported by dielectric structure. No ground connection is used. The arrangement resembles a dipole antenna capacitively coupled to ground.

Note: The placement of the munition or weapon system in either a monopole or dipole configuration may not constitute a worst case condition. Some weapon systems receive more energy when attached to launch platforms, under wing pylons, missile rails, etc. than if left out in free space. Further, the drive currents from attached umbilicals must be considered when determining the safety of ordnance in an NEMP field. If survivability in these configurations is required, realistic tests should be designed which include ordnance handling gear, platform characteristics and position of exposure.

9.3 Specific Test Procedures

9.3.1 Test Procedure with Live EIDS

The tests with live EIDs mounted inside the munition or weapon system, are essentially conducted to assess the pin-to-case mode effects (when the analysis made in **Clause 5** has demonstrated this firing mode was likely to occur or the explosive material between the pins and the case has an effect on the line impedance of the EID circuitry).

The response to a single pulse or progression of pulses interacting with an EID in a firing circuit could be a change in the EID electrical sensitivity, e.g. a bridgewire EID can be desensitised with the effect that more current is needed for initiation. Since the effects are generally produced inside the active material filled between the pins and the case, live EIDs have to be used.

Two Test Procedures A and B are possible

9.3.1.1 TEST PROCEDURE A

This test procedure is only possible when a current probe can be physically mounted on the circuitry near to the EID inside the munition or the weapon system. It consists of two tests A1 and A2 and of an analysis of the reactions which may occur during the Test A2.

TEST A1 ON THE MUNITION OR THE WEAPON SYSTEM

Test A1 consists of measuring the common mode current in the live EID by Bulk Current Measurement (BCM) when the munition or the weapon system is irradiated with the simulated NEMP to allow the transfer function between the pulse NEMP waveform and the common mode current measured on the EID circuitry to be obtained. This test leads by extrapolation to the shape and the value of the common mode current (Icm1) which should occur in the EID when the munition is in the real NEMP environment.

The advantage of this test is that the original value of the complex impedance of the explosive material between the pins and the case of the EID or the ground reference of the munition is maintained.

TEST A2 ON THE SUB-SYSTEMS

Test A2, which generally follows the test A1, is a Bulk Current Injection (BCI) test which consists of injecting current pulses directly in the sub-system containing the EID (sub-system removed from the weapon) to directly fire the EID. The safety margin between the common mode current (Icm2) leading

to a reaction of the EID and the common mode current (Icm1) measured by (BCM) when the sub-system was inside the weapon in the NEMP simulated environment can then be evaluated.

Four types of test reaction may occur to the EID:

c. Modification of the RF impedance of the EID in PTC mode.

d. Modification of the direct current (DC) resistance of the EID in PTP mode.

e. Firing of the EID.

f. No effect on the EID.

It has to be noted that the test currents injected by BCI techniques should have the same shape as those measured on the munition or weapon system by BCM techniques but should have higher levels. The BCI tests have to be conducted using the methodology described in Test NCS08 [Ref 4]. The BCI test has to be conducted directly on the individual sub-systems in a laboratory equipped with special protection against the effects of explosion of live EIDs.

NUMBER OF EIDS NEEDED FOR TEST A2

Several EIDS are needed in order to take account of the variability of their electrical characteristics. For the tests where the reaction is of type a) or b) as described above, the radio frequency PTC impedance and the direct current PTP resistance of the EIDs have to be measured and recorded for each EID prior to and after current injection (provided no-fire has occurred).

For each sub-system the minimal number of EIDs to be tested is 5 for each test sequence.

For tests where a reaction of type a), or b) occurs for one or more of the five EIDs the BCI test has to be re-conducted on five new live EIDs with a lower BCI level to find the level where no reaction occurs.

For tests where the reaction is of type c), the no fire threshold energy (NFT) of the family of the EID has to be evaluated with a statistical method (Bruceton, Probit, One Shot method). A minimum of 50 EIDs is required for this test.

For tests where no reaction occurs (i.e. reaction of type d) the test is considered as completed when the safety margin between Icm2 and Icm1 is higher than or equal to the required safety margin. When no safety margin has been defined a fallback safety margin value of 20 dB can be used.

Test Procedure A is often preferred to Test Procedure B because it is easier to change a live EID in a sub-system rather than in a weapon. Test Procedure A also has the advantage in that safety margins are determined between the measured currents on the firing lines of the whole munition or weapon system during the NEMP simulated illumination and the no fire threshold level or reaction/dudding level for that family of EIDs.

9.3.1.2 TEST PROCEDURE B

Test Procedure B consists of testing the munition or the weapon system containing live EIDs (but with all other explosive material removed) but involves no instrumentation during test. This procedure is used when it is not possible to place measuring systems inside the munition or the weapon system and when it is required to assess one or both pin-to-pin and pin-to-case mode effects.

This Test Procedure consists of recording DC resistances and RF impedances of each EID prior to and after the full threat level NEMP illumination of the munition or the weapon system (provided the EIDs do not fire).

The number of EID samples used is critical in the assigning of relevance to NEMP test results. Because this procedure is go/no-go in nature, the results can only be examined statistically. Little confidence should be given to the fact that one tested munition survived a test threat. Since it is a long and difficult process to dismantle the sub-systems of a munition and to change the EIDs, a minimum of 8 EIDs is required for this test to demonstrate a reliability level of 75% with a confidence level of 90%.

9.3.1.3 TEST PROCEDURE C with Instrumented EIDS

Test Procedure C is conducted to assess the pin-to-pin mode effects with instrumented EIDs mounted inside the munition or weapon system.

This Test Procedure consists of measuring the transient temperature reached by the bridgewire of an inert EID which is installed in the weapon in place of a live EID during the NEMP simulated pulse. The measurement has to be made with a temperature sensor (optical sensor or electrical thermocouple) which is placed close to the bridgewire of the EID but without any electrical contact with it. Both the thermal sensor and the EID have to be calibrated together with a pulse NEMP generator in order to determine the calibration function between the energy received by the bridgewire and its peak temperature.

The measurement has to be conducted with special sensors which have a low thermal time constant (same order as the thermal time constant of the EID) and a fast response. The energy measured in the instrumented EIDs can then be compared with the no fire threshold energy of the EID in order to develop either a safety margin or a probability of firing the EID for the NEMP pulse level of the test.

9.3.1.4 TEST PROCEDURE D with Voltage Probes

Test Procedure D can be used as an alternative to Test Procedure A (with live EIDs) to assess the pin-to-case mode effects when it has been demonstrated that the effect of the explosive material on the line impedance of the circuitry of the EID can be neglected.

This test procedure requires a voltage probe (of the voltage divider type) to be physically mounted inside the munition or the weapon system, in place of the EID (which has been removed).It consists of two tests, D1 and D2, and of an analysis of the reactions which may occur during test D2.

TEST D1 ON THE MUNITION OR THE WEAPON SYSTEM

Test D1 consists of measuring the Common Mode Voltage (CMV) between each pin of the EID and its ground reference when the EID has been removed and replaced by a probe (which acts as a voltage divider) when the munition or the weapon system is irradiated with the simulated NEMP. This procedure allows the transfer function between the pulse NEMP waveform and CMV, measured on the EID circuitry, to be obtained.

The result of this test leads, by extrapolation, to the shape and the value of CMV1 which would occur between the EID pins and it's ground reference in the full threat NEMP environment.

Note 1: This procedure is different from the Test Procedure A described above since it does not keep the original value of the complex impedance of the explosive material between the pins and the case of the EID or the ground reference of the munition.

Note 2: The voltage data given by the voltage probe are transmitted to the recording instrumentation by using fibre optics.

TEST D2 ON THE SUB-SYSTEMS

Test D2 which follows the test D1 consists of applying voltage pulses directly to the sub-system containing the EID (with the EID sub-system removed from the weapon) to directly fire the EID. The safety margin between CMV2, leading to a reaction of the EID, and the CMV1 obtained with test D1 is then evaluated.

Four types of test reactions may occur to the EID:

a. Modification of the RF impedance of the EID in PTC mode.

b. Modification of the direct current (DC) resistance of the EID in PTP mode.

c. Firing of the EID.

d. No firing of the EID.

It has to be noted that the test voltage pulses should have the same shape as those measured on the munition or weapon system by test D1 but should have higher levels. The D1 and D2 tests have to be conducted using the methodology described in NCS08 Test Ref [4]. The test D2 has to be conducted directly on the individual sub-systems or EIDs in a laboratory equipped with special protection against the effects of explosion of live EIDs.

NUMBER OF EIDS NEEDED FOR TEST D2

Several EIDS are needed in order to take account of the variability of their electrical characteristics. For tests where the reaction is of type a) or b) as described above, the radio frequency PTC impedance and the direct current PTP resistance of the EIDs have to be measured and recorded for each EID prior to and after voltage injection (provided no-fire has occurred).

For each sub-system the minimum number of EIDs to be tested is 5 for each test sequence.

For tests where a reaction of type a) or b) occurs for one or more of the five EIDs. Test D2 has to be re-conducted on five new live EIDs with a lower voltage level to find the level where no reaction occurs.

For tests where the reaction is of type c), the no fire threshold energy (NFT) of the family of the EID has to be evaluated with a statistical method (Bruceton, Probit, One Shot method). A minimum of 50 EIDs is required for this test.

For tests where no reaction occurs (i.e. reaction of type d) the test is considered as completed when the safety margin between the common mode voltage (Vcm2) injected in the sub-system containing the EID and the common mode voltage (Vcm1) is higher than or equal to the required safety margin. When no safety margin value has been defined a fallback value of 20 dB can be used.

9.3.1.5 TEST PROCEDURE E for Associated Electrical/Electronic Systems

Test Procedure E is to be conducted on the electrical/electronic systems which are associated with the EIDs This procedure consists of conducting functional tests of these electrical/electronic sub-systems prior to and after each testing sequence (if possible) or at the end of all the tests. The test procedure can be conducted with live or instrumented EIDs. Where undisturbed operation of a powered system during an EMP exposure is required, facilities to monitor the system behaviour will be necessary.

10 NUMBER OF TESTS

10.1 The number of tests to be conducted on a munition or a weapon system depends on the number Nc of its different electrical and geometrical configurations and on the effects being addressed, namely

a. Effects on EIDs (in PTP and PTC mode);

b. Effects on electronic associated systems.

The number of tests also differs according to whether the munition contains live EIDs, probes or instrumented EIDs.

10.2 The guide to the number of EIDs and test pulses required is given in **Table 508/5–1** which gives for each procedure:

a. The number Ne of EIDs.

b. The minimum number of pulses Np for each test sequence at a given threat level.

c. The minimum number of threat levels Nl which have to be applied to take account of non-linearity phenomena.

Therefore, the number of pulses to apply for a NEMP test is depending on Ne, Np, Nl and Nc.

Test Procedure	Number of EIDs (Ne)	Minimum number of pulses for each Test Sequence (Np)	Minimum number of threat levels (Nl)	Notes
A1	1	5	3	-
A2	5	10	2	(1)
B	8	15	2	-
C	1	3	2	(2)
D1	-	5	2	(3)
D2	5	10	2	(1)
E	1	-	-	(4)

Table 508/5 – 1 Number of Pulses to Apply for NEMP Test

Note 1: The number of EIDs depends on the result of the test. For reactions of type a) and b) 5 or a multiple of 5 EIDs are required. If resistance measurement shows significant change after a single pulse then testing shall be conducted again with 5 additional EIDs but with a lower level of injection in order to find the level where no reaction of the EID occurs. The number of EIDs for reactions of type c) is greater than 50.

Note 2: Test with instrumented EID;

Note 3: Test with voltage probes (the EID has been removed);

Note 4: The test is conducted after each test sequence or at the end of the test program. The EIDs can be live or instrumented.

11 ACCEPTANCE CRITERIA

11.1 Failure Criteria

11.1.1 Where either a passive (un-powered) or partially/fully active (powered up) munition or weapon is required only to be safe but not usable after NEMP exposure, the following conditions shall be met:

d. For a munition in which EIDs are held in an unarmed state, i.e., out of line, evidence of the EIDs having fired or dudded does not constitute failure;

e. For a munition in which EIDs are in a permanently armed state and hence, if fired in a live munition, would cause it to function in an unacceptable way, the evidence of the EIDs having fired, or damaged sufficiently to cause significant physical change shall constitute failure (reaction described in **Clause 9.3.1.1**).

11.1.2 For either a passive or partially active munition or weapon system required to be safe and capable of operational use after exposure, evidence of resistance change, degradation or other physical damage to an EID or its associated electronic sub-system may constitute failure unless further examination or testing can show that the degradation is acceptable and will not impair either the safety or the subsequent performance of the munition.

11.1.3 For a munition or weapon system which is fully active (powered up) during NEMP exposure and required to be safe and capable of completing its operational mission, degradation shall not unacceptably impair either its safety or performance during use. Where the degradation could result in a hazard or significant loss of performance, it will constitute a failure. A temporary loss of performance for some systems may be acceptable.

11.2 Safety Margins

11.2.1 It should be demonstrated that there is a safety margin between the levels of stress that can cause upset, damage or unintended events of hazardous nature (particularly those applying to EID given in terms of a no fire threshold or switching levels for electronic devices) and the levels of stress likely to be encountered in the NEMP environment specified in Ref [1].

11.2.2 Safety margins are to be agreed by the National Authority, and are applicable to instrumented systems since they must be related to the no fire thresholds of EIDs or upset levels of electronic devices.

12 REPORTING REQUIREMENTS

12.1 Test Report

A Test Report shall be provided that includes, but is not limited to, the following:

a. The Test Plan.

b. The analysis upon which the plan was founded.

c. The tests and results.

d. Deviations from Test Plan including, if made, a rationale on the reasons for the changes.

e. The analysis of the test results and their implications for the safety and suitability for service of the system in the NEMP environment specified in [Ref 1].

f. A statement as to whether or not the munition and its associated systems have met the criteria specified. The rationale leading to the conclusion should include all assumptions and engineering judgements made.

12.2 Assessment Report

When the safety and suitability for service assessment of the susceptibility of the munition/ weapon system shows conclusively that the system is either not susceptible or not unacceptably susceptible to the NEMP threat specified in [Ref 1] or will not be likely encounter the threat, NEMP testing may be waived by the National Safety Approving Authority. The results of the Assessment report shall be provided in lieu of a Test Report.

13 APPLIABLE DOCUMENTS

13.1 Referenced

Ref 1	AECTP 256	Electrical/Electromagnetic Environmental Conditions Nuclear Electromagnetic Pulse
Ref 2	AEP-9 Vol 5	NATO Manual of Simulation of Nuclear Weapons Effects – Simulators of Electromagnetic Pulse (EMP) Effects
Ref 3	AEP 18	Electrical/Electromagnetic Environmental Tests – Equipment and Subsystems
Ref 4	AECTP 501	Electromagnetic Environmental Tests–Equipment and Sub Systems

13.2 Information Only

AOP-15	Guidance on the Assessment of the Safety and Suitability for Service on Non-Nuclear Munitions for NATO Armed Forces

AOP 38	Glossary of Terms and Definitions concerning the Safety and Suitability for service of Munitions, Explosives and Related Products AOP 38
AAP 55	NATO E3 Terms and Definition Glossary
STANAG 4145	Nuclear Survivability Criteria for Armed Forces Material and Installations
STANAG 4238	Munition Design Principles, Electrical/Electronic Environments

14 ACRONYMS

BCI	Bulk Current Injection
BCM	Bulk Current Measurement
CMV	Common Mode Voltage
DC	Direct Current
EID	Electrically-Initiated Device
ERM	Electrically Representative Material
NFT	No Fire Threshold
NEMP	Nuclear Electromagnetic Pulse
PTC	Pin-To-Case
PTP	Pin-To-Pin

CATEGORY 510 LEAFLET 1

ELECTROMAGNETIC SHIELDING ENCLOSURES TEST PROCEDURES

1 AIM 510-2

2 ATTENUATION (SHIELDING EFFECTIVENESS 510-2

3 SHIELDING ENCLOSURE 510-2

4 SHIELDING EFFECTIVENESS MEASUREMENT METHODS 510-2

5 APPLICABLE DOCUMENTS 510-2

5.1 Reference 510-2
5.2 Information Only 510-3

CATEGORY 510-LEAFLET 1

Electromagnetic Shielding Enclosures Test Procedures

1 AIM

This aim of this leaflet is to establish a method of measuring Shielding Effectiveness (SE).

The method applies to the shield attenuation measurement of electric fields over the frequency range 10 kHz to 1 GHz and of magnetic fields over the frequency range 10 kHz to 30 MHz. It also provides measurements procedures and estimation techniques for determining the attenuation at frequencies from 10 kHz to 200 MHz using coherent measurements.

2 ATTENUATION (SHIELDING EFFECTIVENESS

Attenuation (Shielding Effectiveness) is the ratio of the signal received (from a transmitter) without the shield to the signal received inside the shield. The insertion lost when the shield is placed between the transmitting antenna and the receiving antenna.

Hence attenuation is defined by:

Attenuation (dB) = 20 Log E_1/E_2 for Electric Fields

Attenuation (dB) = 20 Log H_1/H_2 for Magnetic Fields

Where:

E_2 and E_1 are the electric field strengths within the enclosure and in the absence of the enclosure respectively.

H_2 and H_1 are the magnetic field strengths within the enclosure and in the absence of the enclosure respectively.

3 SHIELDING ENCLOSURE

A structure that protects it's interior from the effect of an exterior electric or magnetic field, or conversely, protects the surrounding environment from the effect of an interior electric or magnetic field. A high performance shield enclosure is generally capable of reducing the effects of both electric and magnetic field strengths by one to seven orders of magnitude depending upon the frequency. An enclosure is normally constructed of metal with provisions for continuous electrical contact between adjoining panels, including doors.

4 SHIELDING EFFECTIVENESS MEASUREMENT METHODS

Reference should be made to IEEE Std 299-1997 [Ref 1] for the preferred measurement procedures of screening effectiveness.

5 APPLICABLE DOCUMENTS

5.1 Reference

Ref 1 IEEE Std 299-1997 IEEE Standard Method of Measuring the Effectiveness of Electromagnetic Shielding Enclosures

5.2 Information Only

EN 61000-4-21 Testing and Measurement Techniques – Reverberation Chamber Test Methods

CATEGORY 510 LEAFLET 2

USE OF LOW POWER TRANSMITTERS CLOSE TO ORDNANCE ITEMS

1 AIM 510/2-2

2 THE ISSUE 510/2-2

3 TEST METHODS AND LIMITS 510/2-2

4 APPLICABLE DOCUMENTS 510/2-3

4.1 Reference 510/2-3

ANNEX A DETERMINATION OF SAFE SEPARATION DISTANCES……510/2-A1

ANNEX B DATA REQUIREMENTS OF THE LOW POWER SYSTEM MANUFACTURER……510/2-B1

ANNEX C SAFE SEPARATION DISTANCE MEASUREMENT METHODS ……510/2-C1

ANNEX D IN SITU FIELD MEASUREMENTS/CHARACTERIZAT……510/2-D1

ANNEX E SAFE SEPARATION DISTANCE USING MONOPOLE ANTENNAS……510/2-E1

FIGURES

Figure 510/2 – A1 Potentially Hazardous Electromagnetic Field Strength vs Frequency 510/2-A2

Figure 510/2 – E1 Diagram of Low Band Test Antenna 510/2-E3

Figure 510/2 – E2 Dimensions of Monopole Antenna 510/2-E4

Figure 510/2 – E3 An Example of the Coupling Loss for a Single Measurement Antenna 510/2-E6

Figure 510/2 – E4 Coupling to Half-wave Resonant Dipole 510/2-E7

TABLES

Table 510/2 – A1 Equations for Computing Safe Separation Distances 510/2-A1

Table 510/2 – A2 Supplementary Calculations for Computed Safe Separation Distances < 10 Feet (3 Metres) 510/2-A2

Table 510/2 – E1 Dimensions of Antennas 510/2-E3

Table 510/2 – E2 Dimensions of Antenna 510/2-E4

CATEGORY 510-LEAFLET 1

Use of Low Power Transmitters Close to Ordnance

1 AIM

The aim of this leaflet is to provide information on the limits, assessment and tests related to the use of low power transmitters in close proximity to ordnance items may be found.

2 THE ISSUE

Electrically Initiated Devices (EIDs) may be found in service use either embedded within an ordnance item (e.g. a rocket motor initiator in a guided weapon or a squib in a flare/distraction system) or as a separate item individually packed or handled (e.g. an EOD detonator or a piston gas motor which has been removed from a weapon). Since EIDs are susceptible to pick-up of rf radiation from the local rf environment tests and assessments to determine their degree of susceptibility are conducted as required by AECTP Leaflet 508-3 [Ref 1]. Such tests, however, do not necessarily cover all phases of the life of an EID – in particular where an EID is being assembled into or disassembled from a weapon or is being handled as a loose item. Moreover, it remains possible for some systems to be introduced into service for which no HERO assessment has been completed.

Noting the existence of these EIDs and the increasing use of radio frequency transmitters for applications such as RF Identification, data logging, local voice and data communications etc which may be in very close proximity to the EID (e.g. installed in/on the same container as a weapon or used in a space where a weapon is being assembled) it has been necessary for AC/326 SG/3 to introduce a STANAG to enable this situation to be controlled Electrically Initiated Devices (EIDs) may be found in service use either embedded within an ordnance item (e.g. a rocket motor initiator in a guided weapon or a squib in a flare/distraction system) or as a separate item individually packed or handled (e.g. an EOD detonator or a piston gas motor which has been removed from a weapon). Since EIDs are susceptible to pick-up of rf radiation from the local rf environment tests and assessments to determine their degree of susceptibility are conducted as required by [Ref 1. Such tests, however, do not necessarily cover all phases of the life of an EID – in particular where an EID is being assembled into or disassembled from a weapon or is being handled as a loose item. Moreover, it remains possible for some systems to be introduced into service for which no HERO assessment has been completed.

3 TEST METHODS AND LIMITS

STANAG 4699 Edition 1 [Ref 2] contains the certification process and test/assessment methods which are to be used to determine the safe distance required between a single low power RF transmitter and a worst case sensitive weapon item/EID. The standard contains a limit for RF field strength vs frequency which should not be exceeded by any single transmitter (or multiple transmitters) which may inadvertently come into close proximity with a sensitive EID/ordnance containing an EID. The limit is based on the worst case sensitivity likely to be seen in any in-service ordnance item/EID. This limit line is also referenced in Ref 1 and is to be used to determine the safe distance from the transmitter/s. The process described Ref 2 outlines the project [procedures to be followed to gain certification and which shall be used for all low power transmitters likely to be used in close proximity to ordnance containing EIDs.

This process is principally applicable to transmitters which are to be used in magazines, storage, handling and assembly areas where the state of an ordnance system's susceptibility may be unknown resulting in strict control on transmitter radiated power. This does not negate the requirement for HERO tests on ordnance systems in accordance with Ref 1 to be completed. These generate susceptibility data for the ordnance (in its deployed states) so that safe distances from all transmitters can be determined.

The technical content found in Ref 2 is contained in Annexes and these are repeated as Annexes A to E of this leaflet. It is planned that at the next edition Ref 2 will delete the technical content and refer to this leaflet. The assessments and tests in the Annexes focus on the test/certification of a single low power device in order to determine a safe separation distance. HERO risks posed by RFID and other low power devices stem from both the proximity of a single device to ordnance and the aggregate effects which result when multiple devices are used within an enclosed electrically reflective space. Accordingly, mitigation of these risks requires evaluation of the transmitter to establish a safe separation distance in order to ensure safe operational guidelines for a single device as well as a review of the intended application in order to assess risk in areas where multiple transmitters may be deployed. For the latter situation it is necessary to evaluate the total radiated power of the transmitters and the reverberant nature of the space to assure HERO compliance. This is required since in a quasi-reverberant space, safe separation distances can be overcome by the cumulative build-up of electromagnetic radiation which must be addressed when evaluating the potential HERO impact. Reverberant describes a space where significant reflection of RF occurs from the walls and other structures inside the space. Techniques exists for the characterization of these spaces in order to determine the cavity calibration factor (CCF) which can be used to predict the resultant maximum electric fields as a function of frequency and total radiated power in that space. These techniques are not currently covered by the Annexes but will be addressed in an update to this leaflet.

4 APPLICABLE DOCUMENTS

4.1 Reference

Ref 1 AECTP 500 Leaflet 508/3	Hazards Of Electromagnetic Radiation To Ordnance (HERO) Test Procedure
STANAG 4699	Low Power System Certification Process

ANNEX A

DETERMINATION OF SAFE SEPARATION DISTANCES

A.1

The National Safety Acceptance Authority (NSAA) will determine the safe separation distance required using **Tables 510/2 – A1** and **Table 510/2 – A**.

Where the Safe Separation Distance (SSD) is unacceptable, electric field or power measurements are required. These shall be carried out in accordance with the procedures described in **Annexes C**, **D** or **E**. The SSD is that at which the field falls below the value shown in **Fig 510/2 – A2** or the power received falls below the limit given in **Annex E**.

Frequency Range (MHz)	Equations
$0.01 \le f < 2.0$	$D = 5.5 f \sqrt{P_t G_t}$ metres $D = 18 f \sqrt{P_t G_t}$ feet
$2.0 \le f < 80.0$	$D = 10.95 \sqrt{P_t G_t}$ metres $D = 36 \sqrt{P_t G_t}$ feet
$80.0 \le f < 100000.0$	$D = 876 f^{-1} \sqrt{P_t G_t}$ metres $D = 2873 f^{-1} \sqrt{P_t G_t}$ feet
Where D	Is the distance in the units designated
P_t	is the average power output of the transmitter in watts
G_t	Is the numerical (far-field) gain ratio (not the dB value) of the transmitting antenna, derived as follows: $G_t = 1*10^{G/10}$ where G = gain in dBi, and
f	is the transmitting frequency in Megahertz (MHz)
Notes: 1	The information above represents “worst-case” conditions for the Safe Separation Distance required
2	Equations are provided with the proper numerical multipliers to yield distances in either meters or feet
3	In cases where the computed separation distance is less than 3 meters (10 feet), refer to **Table 510/2-A2** for guidance

Table 510/2 – A1 Equations for Computing Safe Separation Distances

System Parameters	Minimum Separation Distance (FEET/METRE)
EIRP ≤ 0.025 watts Frequencies ≥ 100 MHz	0/0 See Note 1
0.025 < EIRP ≤ 0.1 watts Frequencies ≥ 1 GHz	1/0.3
0.025 < EIRP ≤ 0.1 watts 200 MHz ≤ Freq < 1 GHz	5/1.5
All other combinations of EIRP and Frequency	Use calculated Safe Separation Distance per **Table 510/2 – A1**

EIRP = $P_t * G_t$

Where EIRP is the effective isotropic radiated power in watts.
P_t is the average power output of the transmitter in watts
G_t Is the numerical (far-field) gain ratio (not the dB value) of the transmitting antenna, derived as follows:
$G_t = 1*10^{G/10}$ where
G = gain in dBi,

Example: If the antenna far-field gain is 2.1 dBi, the far-field gain ratio is

$1 \times 10^{2.1/10} = 1 \times 10_{0.21} = 1.62$

Note 1: A zero Safe Separation Distance means transmitter can be placed against the sensitive device but with no part of the antenna touching it.

Table 510/2 – A2 Supplementary Calculations for Computed Safe Separation Distances < 10 Feet (3 Metres)

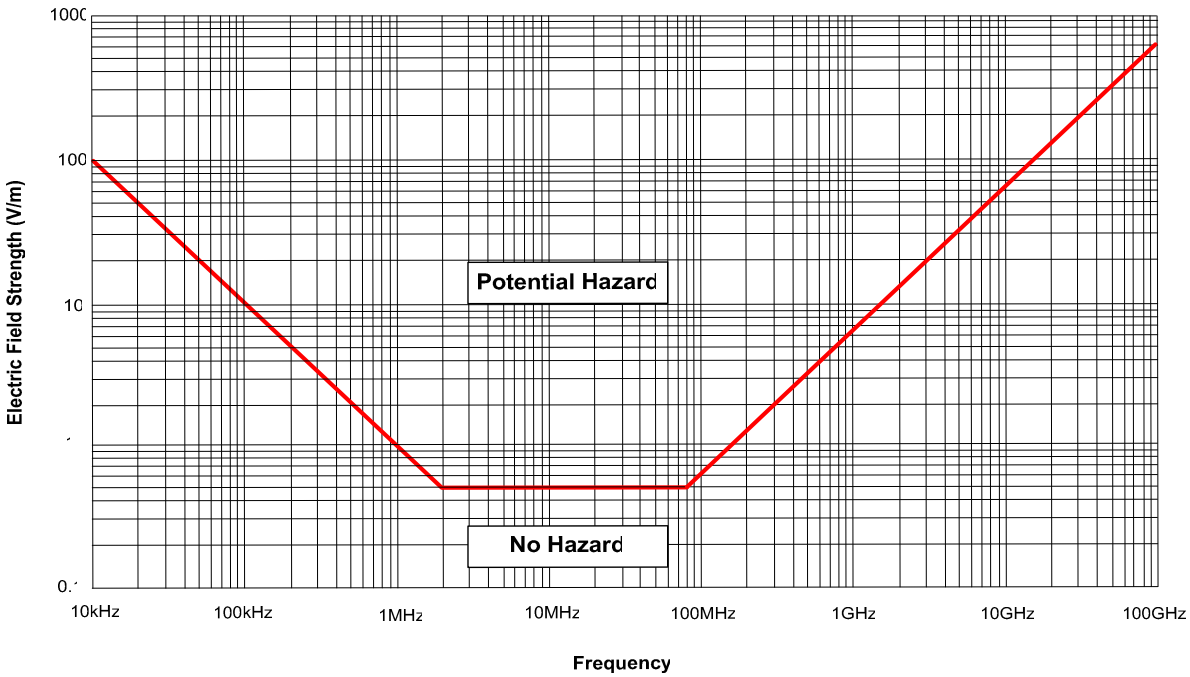

Figure 510/2 – A1 Potentially Hazardous Electromagnetic Field Strength vs Frequency

ANNEX B

DATA REQUIREMENTS OF THE LOW POWER SYSTEM MANUFACTURER

This method applies to a single device and will be utilized for certification when calculated HERO SSDs are operationally feasible. When performing an analysis of manufacturer specifications, the calculation methodologies described in **Annex A**, **Tables 510/**2 **– A1** and **510/2 – A2** will be used.

This method requires unit specific information be provided to the NSAA conducting the requested assessment. At a minimum, these data shall include the following:

a. Operational frequency and bandwidth

b. Maximum rated transmit Average and peak powers

c. Antenna gain

d. Brief description of intended operational use/installation

ANNEX C

SAFE SEPARATION DISTANCE MEASUREMENT METHODS

C.1 Where the calculated SSDs, as a result of **Annex B**, are not operationally feasible or smaller SSDs, up to "near touching," are desired, or when an EIRP measurement is deemed necessary to establish a SSD, then either of the following SSD measurement methods can be used.

- E-Field Probe SSD Measurement Method
- Monopole SSD Measurement Method

The choice of measurement method is at the discretion of the NTA. The field probe method allows use of commercially available instruments and probes although they may not necessarily be available in all EMC test facilities. The SSDs are derived from worst case predictions of maximum allowable field strength which are based on theoretical and empirical data. The monopole measurement method requires construction of special antennas (which should be simple to construct) but gives an SSD directly related to power pick-up in a dipole antenna assumed to equate to a worst case EID circuit. Whilst in theory either method can be employed at any frequency, in practice size limitations on antennas will mean measurements at below about 300 MHz become problematic. For systems operating below these frequencies advice should be sought from the NSAA.

C.2 E-Field Probe Validation

Since there are various E-field probe systems available and many do not have sufficient sensitivity or are not capable of providing accurate information of dynamic signal modulations, such as those used in wireless protocols, a probe validation measurement is required. Diode based probes valid for use in the near field shall be used for this test. Probes with radomes greater than 15cm diameter shall not be used.

This measurement must be conducted in an anechoic chamber or suitable (reflection free) open area test site (OATS) in accordance with the following procedure:

a. Place the system under test (SUT) on a dielectric block approximately 1 meter above the facility floor.

b. Configure the SUT to radiate at the maximum possible EIRP.

c. Place a calibrated dipole antenna (tuned to center of the specified emissions bandwidth) at the same height as the centerline of the SUT and spaced 1 meter from the radiating face of the SUT.

d. Configure the spectrum analyzer as follows:

   1. Center frequency (CF) = specified center frequency of SUT
   2. Start/Stop Frequency to cover the bandwidth of the device +/- 10%
   3. Sweep Time (min) = 100 mS
   4. Resolution Bandwidth (min) = 3 MHz
   5. Video Bandwidth (min) = 3 MHz
   6. Turn Max Hold on
   7. Set units to dBµV
   8. Allow spectrum analyzer to sweep continuously for approximately five (5) minutes or until the trace stabilizes.
   9. At this point, the resultant trace can be stored and the frequency of maximum amplitude can be identified.

10. Compute the measured field strength using:

$$E = V_t + AF$$

Where: E is the electric field strength in dBµV/m

V_t is the receiver voltage in dBµV

AF is the antenna factor in dBm^{-1}

e. Configure the measurement probe of choice and replace the dipole antenna with that probe at the 1 meter distance from the radiating surface (face) of the SUT.

f. Allow sufficient time for the probe to record the maximum amplitude and compare that to the maximum value detected via the dipole antenna. Provided the two measurements are within 3 dB, the probe may be considered adequate for the desired measurement.

C.3 E-Field Probe SSD Measurement Method

On completion of probe validation, decrease the distance between the SUT and the probe until the measured value is equal to the **Annex A**, **Figure 510/2 – A1** at the frequency of maximum radiation. Repeat this for all faces/orientations of the SUT; the maximum distance at which this value is measured will be recorded as the SSD. Should the measured value not exceed the value in **Figure 510/1 – A1** when the probe is in direct contact with the SUT, an SSD of 0.0 inches (0 cm) shall be applied.

C.4 Monopole SSD Measurement Method

The SSD can also be measured using specially designed and calibrated monopole antennas as an alternative to an E-field probe. Full details of the monopole SSD measurement method are included in **Annex E**. The Safe Separation Distance using this method is that at which the received power falls to the limit value given in **Annex E**.

For either of these methods if it becomes necessary to move further out than 1 meter to establish an SSD, tuned dipole field measurements shall be made and the HERO SSDs shall be based on the distances where the field measurements are equal to the field levels in **Figure 510/2 – A1**.

ANNEX D

IN SITU FIELD MEASUREMENTS/CHARACTERIZATION

This method applies when the SUT will be used within or on enclosed electrically reflective spaces (such as a RFID tag mounted on a metallic pallet or ordnance launch canister). If the SUT is placed within a transport/storage container advice should be sought from the NSAA on the need for in situ measurements. It will be conducted to assure that the resultant electric field strengths within enclosed spaces will not exceed those shown in **Figure 510/2 – A1**. This technique is primarily intended for fixed transmitter installations such as LAN access points, shipboard lossy-line antennas or even those used for ordnance tracking systems on vehicles. The transmission source will be evaluated in the proposed location or on the container or transport vehicle intended for use. Any change in either will require approval by the NSAA. These measurements require use of an electric field probe which has been validated as outlined in **Annex C**, and will be conducted as outlined in the following sequence.

a. Install transmission source in the proposed location and configure unit to transmit at the maximum possible output power.

b. Establish a three-dimensional grid within the interior of the test volume. Grid intersection points shall not exceed one sixth of the smallest dimension of the interior test volume.

c. At a minimum, the measurements shall be taken at each intersection point of the established grid using the instrument configuration outlined in **Annex C** These data may be collected by manually manipulating the measurement probe through the test volume pausing at each grid intersection point for approximately one second or by mounting the probe on a stand and recording the measured value at each intersection point.

d. The maximum value recorded shall not exceed the values provided in **Figure 510/2 – A1**.

ANNEX E

SAFE SEPARATION DISTANCE USING MONOPOLE ANTENNAS

E.1 Purpose

This document gives a method for assessing the hazard to ordnance and systems containing Electrically Initiated Devices (EIDs) from Low Power RF Devices, e.g. WiFi, Bluetooth, PMR. These are typically devices with less than 1 watt [Average] of transmitted power and tend to be handheld or portable. As such, this test method addresses making measurements in the near field.

E.2 Test Method

E.2.1 Test Assumptions

The purpose of this test method is to perform the hazard assessment measurements under standardized conditions. Theoretical assessment procedures have for a long time made the assumptions that EIDs are losslessly matched to the bridge wire or fuse wiring acting as an unintentional receive antenna; and that the wiring never acts as a receive antenna with a gain better than that of a resonant dipole. This test method then seeks to replicate these assumptions by: calibrating out all losses in the measurement systems; and adjusting the coupling factor of the measurement antenna to that of a resonant dipole antenna.

E.3. Test Equipment Required

E.3.1 Measurement Antenna

An antenna is required with known performance parameters. It should ideally have a flat gain response over the frequency band of interest, and the direction of peak gain should be known and constant over the same frequency range. **Clause E.7** gives details of how to construct a suitable antenna. (Two of these antennas are required for purposes of calibration.)

E.3.2 Requirements for RF Test Equipment

The following RF test equipment is required:

a. A network analyser capable of measuring attenuation over the frequency band of interest. **Clause E.9** gives further details.

b. A spectrum analyser capable of displaying spectral response over the frequency band of interest. The spectrum analyser must be capable of sampling FFT analysis with at least 10 MHz Resolution Bandwidth and a Peak Hold trace capability.

c. Two low loss flexible cables of approximately 1 m length with type-N male connectors at each end.

E.4 Test Layout

E.4.1 Requirements for Test Location

The test location must be in an open area with the equipment at least 2 m from the walls.

E.4.2 Typical Test Set-up for Calibrations

Two antennas are mounted at least 0.5 m above a non-conducting bench surface. The antennas are placed so that the edges of their ground planes are in contact. The two flexible cables are used to connect the two antennas to port 1 and port 2 of the network analyser.

E.4.3 Typical Test Set-up for Test Measurements

The test antenna must be supported at least 0.5 m above a non-conducting bench surface. It has been found acceptable to support the equipment directly above the spectrum analyser using a retort stand to support the antenna. The measurement antenna is connected to the spectrum analyser using one of the flexible cables. The test arrangement must allow for the item under test to approach the measurement antenna along the direction of peak gain.

E.4.4 Calibration of Test Antenna

The network analyser is set up to measure through-loss and the cables are connected between ports 1 and 2. The loss of each cable is recorded. Two antennas are placed side by side and are connected to the network analyser using the cables. The coupling loss between the two antennas is recorded. This coupling loss is then adjusted (i.e. calibrated) to that of a resonant dipole. Details of this calibration are shown in **Clause E.10**.

E.5 Testing Low Power RF Devices

E.5.1 Configuring the Test Item

Where possible the system under test must be set to its highest possible transmit power level or operated in its worst-case mode. If it is not possible to predict which is the worse case operating mode then the item should be tested in all possible operating modes.

E.5.2 Performing the Test

The spectrum analyser should be programmed with the calibration factor for the measurement antenna, and set to its Peak Hold display function. The system under test is then brought towards the measurement antenna until the recorded peak power reaches the test limit of 2.5 mW. (Depending on how the system under test operates this may need to be done very slowly, or by pausing at regular intervals to allow the spectrum analyser to capture the transmissions.) The distance from the measurement antenna (i.e. the actual monopole and not the monopole antenna's ground plane) to the system under test is measured and recorded.

The antenna of the system under test must be oriented for maximum coupling. If this cannot be predicted, the orientation of the device must be varied during the test. If the item is hand held, care must be taken that the hand is not shielding the antenna. The detail of the measurement is shown in **Clause E.11**.

E.6 Limits

The power limit to be applied is 2.5 mW. This represents a power level with a suitable HERO Safety Margin below the no fire threshold of a sensitive EID.

E.7 Construction of Measurement Antenna

E.7.1 Requirements for Measurement Antenna

Described below are the details on how to construct two antennas suitable for making these hazard measurements. These antennas have a flat gain response over frequency ranges of interest, and the direction of the peak gain is constrained to the horizontal.

Measurement antennas for different frequency ranges can be constructed by scaling the relative dimensions of the antenna.

E.7.2 Low Band Test Antenna

This antenna is designed to operate in the frequency band from approximately 500 MHz to 3 GHz.

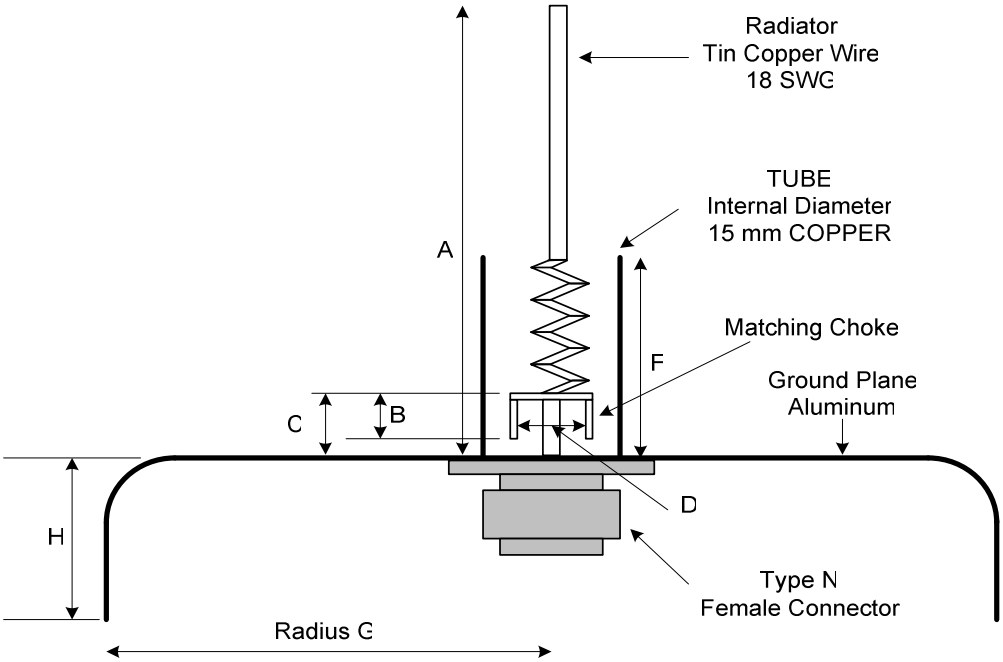

Figure 510/2 – E1 Diagram of Low Band Test Antenna

The dimensions of a specific monopole antenna design to cover the high band are shown in **Table 510/2 – E2.**

Dimensions	Value
A	77.5 ± 1 mm
B	4.0 ± 0.5 mm
C	7.0 ± 0.5 mm
D	6.0 ± 0.5 mm
E (Choke Width)	5.0 ± 0.2 mm
F	31.5 ± 0.5 mm
G	120 ± 1 mm
H	52.5 ± 1 mm

Table 510/2 – E1 Dimensions of Antennas

The internal helix has four turns wound on a rod of 5 mm diameter. The top of the helix is level with the top of the sleeve.

E.7.3 High Band Test Antenna

This antenna is designed to operate from 2.6 GHz to 6 GHz.

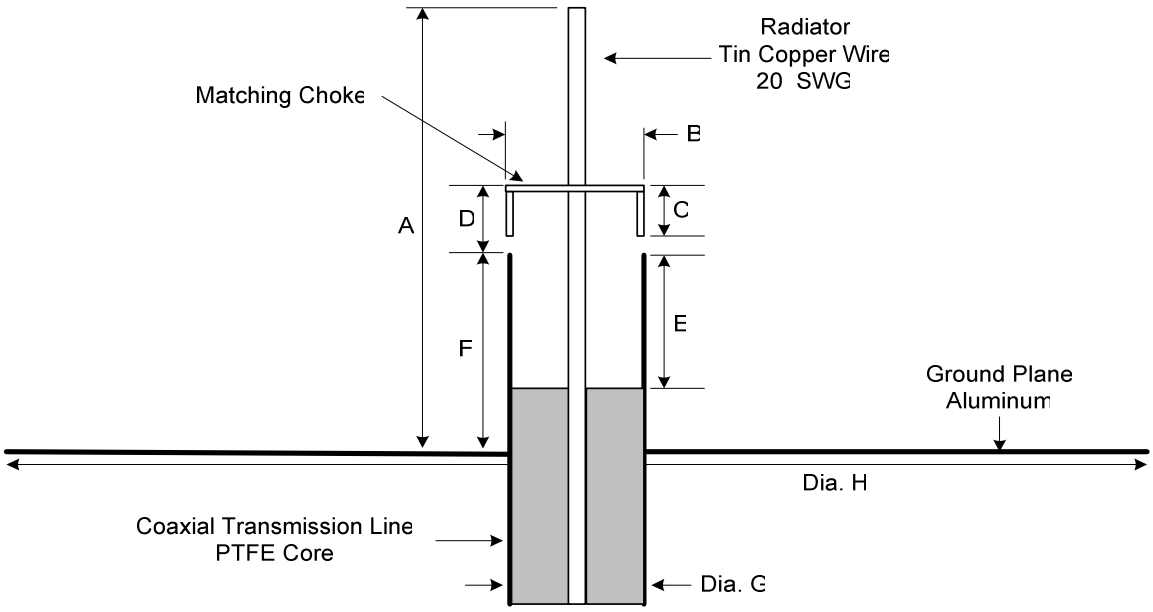

Figure 510/2 – E2 Dimensions of Monopole Antenna

The dimensions of a specific monopole antenna design to cover the high band are shown in **Table 510/2 – E2**.

Dimensions	2.6 60 6 GHz Band
A	34 ± 0.5 mm
B	7 ± 0.2 mm
C	5 ± 0.2 mm
D	7 ± 0.2 mm
E	6 ± 0.2 mm
F	9 ± 0.2 mm
G	8 ± 0.2 mm
H	86 ± 0.5 mm
Across B	8 ± 0.2 mm

Table 510/2 – E2 Dimensions of Antenna

E.8 General Instructions for Constructing Antennas

The ground plane should be circular. Where materials are not specified they will generally be brass or copper. The materials used and the thickness of the materials will have an effect on the performance, but this is not likely to be critical. The performance of the antenna in terms of gain, flatness of frequency response, etc. will be verified during the calibration process.

E.9 Special requirements for RF Test Equipment

E.9.1 Network Analyser

A network analyser will be required for the antenna calibration and the measurement of cable losses. The required network analyser performance is described below.

- Minimum Frequency Range — 300 kHz to 6.6 GHz
- Resolution — 1 Hz
- Directivity — 38 dB
- Source match — 35 dB
- Load match — 37 dB
- Level resolution — 0.05 dB
- IF bandwidth settings Range — 10 Hz to 100 kHz
- RF connectors — Type-N, female; 50 Ω, nominal
- Data formats — Log magnitude.

E.9.2 Spectrum Analyser

A spectrum analyser will be required to record the peak RF transmission from the system under test. The required spectrum analyser performance is described below.

- Frequency readout accuracy (start, stop, center, marker) — 0.5%
- Frequency span (FFT and swept mode) — Range 0 Hz (zero span) 10 Hz to maximum frequency of model
- Resolution bandwidth (RBW) — Range (–3 dB bandwidth) 1 Hz to 3 MHz (10% steps)
- Analysis bandwidth — Maximum bandwidth 10 MHz
- Video bandwidth (VBW) — Range 1 Hz to 3 MHz
- Display range — Log scale 0.1 to 1 dB/div in 0.1 dB steps, 1 to 20 dB/div in 1 dB steps
- RF input connector: — Type-N female, 50 Ω

E.10 Description of Calibration Procedure

- Set up the network analyser to measure through loss (S21).
- Connect the two flexible cables to ports 1 and 2 of the network analyser and connect their free ends together using a type N back-to-back adaptor.
- Calibrate the through loss of the network analyser using the internal calibration procedure, zeroing the system to eliminate cable loss.
- Mount the two antennas at least 0.5 m above a non-conducting bench surface, placing the antennas so that the edges of their ground planes are in contact.

- Connect the two antennas to port 1 and port 2 of the network analyser using the flexible cables.
- The attenuation between the two antennas is displayed.
- Record the results on disk.
- Read the results into an EXCEL file.

A calibration curve as shown in should be obtained when two identical low band measurement antennas are placed edge to edge and the power coupled between them is recorded. As there are two identical antennas during calibration, it is assumed that the coupling loss of a single measurement antenna is half the total coupling loss in dB. An example of the coupling loss for a (single) measurement antenna is shown in **Figure 510/2 – E3**.

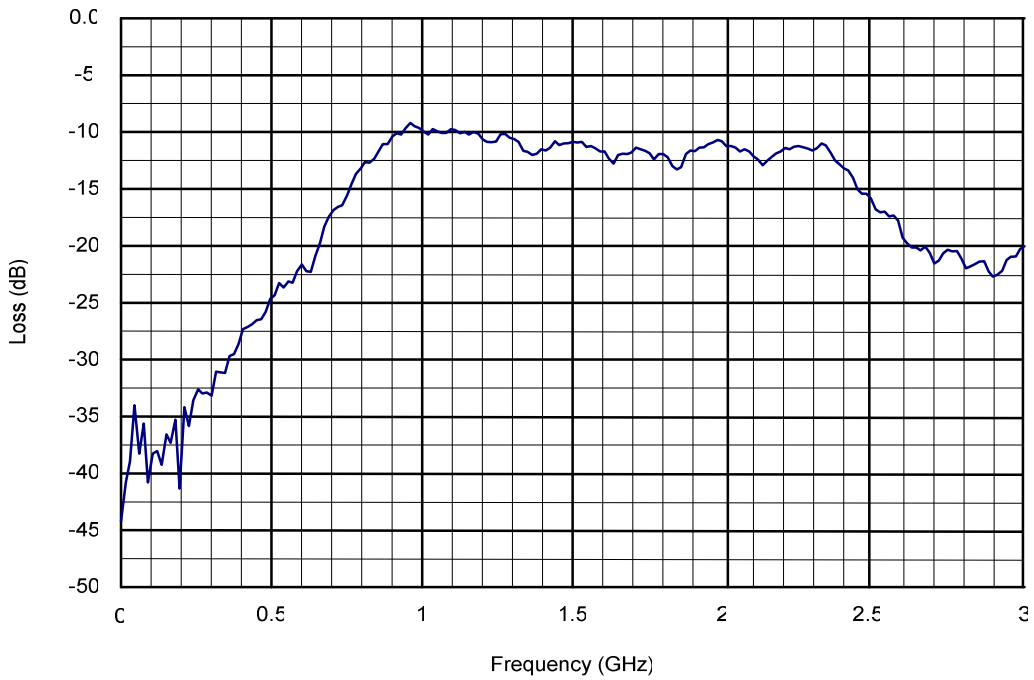

Figure 510/2 – E3
An Example of the Coupling Loss for a Single Measurement Antenna

This result will vary with frequency and the calibration factor must be derived for each frequency under consideration, or a curve generated of correction factor against frequency. With this result it is now possible to establish a correction factor with respect to power which could be coupled into a half wavelength dipole (see **Figure 510/2 – E4**).

The reference position for establishing the correction factor is the edge of the measurement antenna ground plane. As an example, the low band measurement antenna has a ground plane of radius 12 cm, and so 12 cm is the reference distance for the correction factor. From **Figure 510/2 – E3**, the coupling loss for the measurement antenna at 1 GHz is –10 dB. **Figure 510/2 – E4** has the dipole coupling at a 12 cm reference distance as -12 dB. Therefore, the correction factor for the measurement antenna at 1 GHz is 2 dB. This correction factor can be calculated for each frequency in Excel using the captured data.

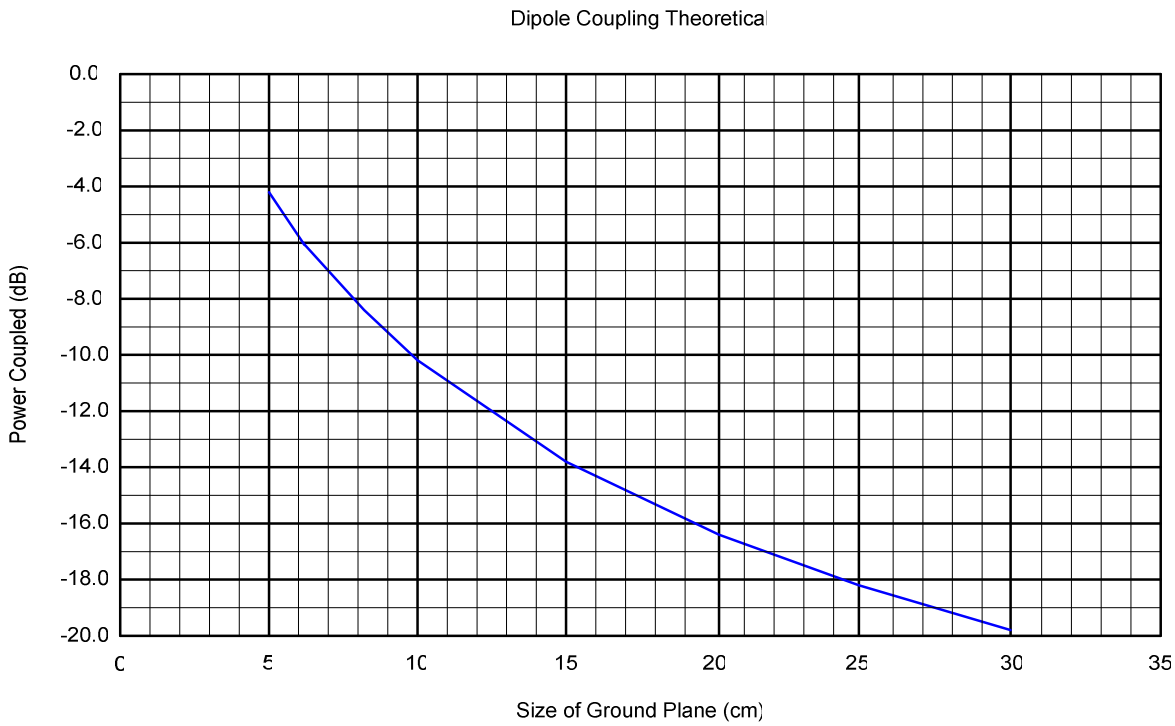

Figure 510/2 – E4 Coupling to Half-wave Resonant Dipole

E.11 Detailed Description of Testing Procedure

a. Calibrate the measurement antenna as previously described.

b. Support the test antenna at least 0.5 m above the bench surface. Mount the monitor antenna clear of any conducting surfaces, either on foam blocks or supported from underneath.

c. Connect the measurement antenna to the input port of the Spectrum Analyser.

d. The spectrum analyser should be programmed with the corrected calibration factor for the measurement antenna.

e. Hold the item to be tested as close as possible to the edge of the measurement antenna ground plane.

f. Hold the item to be tested as close as possible to the edge of the measurement antenna ground plane.

g. Set the centre frequency of the spectrum analyser to the centre frequency of the device under test. If the frequency is not known, set the centre frequency to 1.5 GHz.

h. Set the frequency span to 50 MHz. If the operating frequency of the device is not known, set the span to 1.5 GHz.

i. Adjust the input attenuation to 10 dB.

j. Set the trace function of the spectrum analyser to Peak Hold.

k. Turn on the device for at least 20 seconds and orientate for maximum pick up.

l. Once the transmission characteristics of the item under test have been established, adjust the spectrum analyser setting to optimally capture the peak signal.

m. Remove the item under test to a suitable distance from the measurement antenna.

n. Turn on the device under test and move it forward until the received power reaches the limit. Ensure that the device is oriented for maximum pick-up and allow up to 5 minutes ensuring the peak signal is recorded. The distance may be within the antenna ground plane.

o. Measure the distance between the device and the centre of the measurement antenna. This is now the Safe Separation Distance.